PTC®

Arbortext® IsoDraw® User's Reference

Arbortext IsoDraw Foundation 7.2

Arbortext IsoDraw CADprocess 7.2

April 2011

Parametric Technology Corporation, 140 Kendrick Street, Needham, MA 02494 USA

Contents

About This Guide

This *Arbortext IsoDraw User's Reference* describes how to use the menus, tools, and windows in Arbortext IsoDraw Foundation and Arbortext IsoDraw CADprocess.

Prerequisite Knowledge

Before starting to produce technical illustrations, you should familiarize yourself with the information presented in the *Drawing Basics Tutorial*, and, if you have Arbortext IsoDraw CADprocess, the *3D Mode Tutorial*.

Organization of This Guide

This *Arbortext IsoDraw User's Reference* is divided into three parts:

Menus on page 13	Covers all menu commands in the menu bar at the top of the Arbortext IsoDraw window.
Palette Window Toolbox on page 471	Explains how to use each tool in the palette window.
3D Mode on page 669	(Arbortext IsoDraw CADprocess only) Shows you how to import 3D CAD data, manipulate your view of it in the 3D mode window using special 3D mode tools and menu commands, then project your 3D view into a 2D technical illustration for further editing.

Each part includes examples and descriptions of the dialog boxes and graphical effects that appear when you use menus, tool buttons, and other controls in the Arbortext IsoDraw window.

Related Documentation

For more information on Arbortext IsoDraw products refer to the following documentation found in the Arbortext IsoDraw Help Center. Help Center includes both HTML and PDF versions of the documentation. Choose **Help ▸ Help Center**to access it.

Documentation	Description
Arbortext IsoDraw Release Notes	Information about new, changed, and deleted features in this Arbortext IsoDraw release.
Installing Arbortext IsoDraw	Installation and licensing information for Arbortext IsoDraw.
Drawing Basics Tutorial	Hands-on examples for learning Arbortext IsoDraw basic functions.
3D Mode Tutorial	Hands-on examples for learning 3D CAD data editing functions using Arbortext IsoDraw.
Arbortext IsoDraw User's Reference	(This guide) Comprehensive guide to using the tools and functions in Arbortext IsoDraw products.
Arbortext IsoDraw Macro Language Reference	Reference for writing macros that you can run in Arbortext IsoDraw.
Arbortext IsoDraw Data Exchange Reference	Instructions for importing and exporting graphics data in various formats to and from Arbortext IsoDraw.

Technical Support

Contact PTC Technical Support via the PTC Web site, phone, fax, or e-mail if you encounter problems using your product or the product documentation.

For complete details, refer to Contacting Technical Support in the PTC Customer Service Guide. This guide can be found under the Related Resources section of the PTC Web site at:

http://www.ptc.com/support/

The PTC Web site also provides a search facility for technical documentation of particular interest. To access this search facility, use the URL above and select Search the Knowledge Base.

You must have a Service Contract Number (SCN) before you can receive technical support. If you do not have an SCN, contact PTC Maintenance Department using the instructions found in your *PTC Customer Service Guide* under Contacting Your Maintenance Support Representative.

Documentation for PTC Products

You can access PTC product documentation using the following resources:

- Online Help

  Click **Help** from the user interface for online help available for the product.
- Reference Documents

  Individual product manuals are available from the Reference Documents link of the PTC Web site at the following URL:

  http://www.ptc.com/support/
- Help Center

  A searchable product documentation knowledge base is available from the Help Center link of the PTC Web site at the following URL:

  http://www.ptc.com/support/

You must have a Service Contract Number (SCN) before you can access the Reference Documents or Help Center Web site. If you do not have an SCN, contact PTC Maintenance Department using the instructions found in your PTC Customer Service Guide under Contacting Your Maintenance Support Representative.

Global Services

PTC Global Services delivers the highest quality, most efficient and most comprehensive deployments of the PTC Product Development System including Pro/ENGINEER, Windchill, Arbortext and Mathcad. PTC's Implementation and Expansion solutions integrate the process consulting, technology implementation, education and value management activities customers need to be successful. Customers are led through Solution Design, Solution Development and Solution Deployment phases with the continuous driving objective of maximizing value from their investment.

Contact your PTC sales representative for more information on Global Services.

Comments

PTC welcomes your suggestions and comments on our documentation. You can submit your feedback to the following email address:

arbortext-documentation@ptc.com

Please include the following information in your email:

- Name
- Company
- Product

- Product Version
- Document or Online Help Topic Title
- Level of Expertise in the Product (Beginning, Intermediate, Advanced)
- Comments (including page numbers where applicable)

Documentation Conventions

This guide uses the following notational conventions:

- **Bold text** represents exact text that appears in the program's user interface. This includes items such as button text, menu selections, and dialog box elements. For example,

  Click **OK** to begin the operation.
- A right arrow represents successive menu selections. For example,

  Choose **File ▸ Print** to print the document.
- `Monospaced text` represents code, command names, file paths, or other text that you would type exactly as described. For example,

  At the command line, type `version` to display version information.
- *`Italicized monospaced text`* represents variable text that you would type. For example,

  `installation-dir``\custom\scripts\`
- Italicized text represents a reference to other published material. For example,

  If you are new to the product, refer to the Getting Started Guide for basic interface information.

Menus

1

File Menu

Most commands in the **File** menu can be selected by keyboard commands. If there is a key combination command code, it is indicated next to the command text.

The figure shows which commands in the **File** menu can be selected using a command code.

New

The commands in the **New** menu allow you to create a new Arbortext IsoDraw document or open a drawing template.

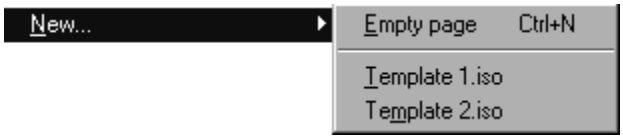

Empty Page

If you select **Empty page** in the submenu, a new window with the name **Untitled -1** appears on the screen. Each additional new window you open in a session will be designated **Untitled** and a number incremented by one.

The designation **Untitled** reminds you that the document you have created still has to be saved. When you save a window for the first time you give it a name. The name of the file is indicated in the title bar and in the **Window** menu (for switching between documents).

Note

Each new file is created in accordance with the set program preferences. These include e.g. information about the size of the drawing area, the defined pens and colors and various other aspects. You can always change these settings at a later date. (See Preferences on page 108 for further information on preferences)

Templates

Listed below **Empty page** in the submenu are all the template files saved in the `Templates` folder.

Templates are files which feature basic settings and attributes that are frequently used. In addition to the basic settings for the Arbortext IsoDraw file, you can also use a drawing template to create basic attributes such as drawing frame, drawing head or a part list field. You can also arrange frequently recurring elements (e.g. library parts, symbols, texts) around the drawing area. Files such as this which have been prepared in advance allows you to start work straightaway.

Select the required template file from the submenu. A new window appears with the name **Untitled – *X***. The content and settings for the window correspond to the selected template file.

Note

Preferences on page 108 contains information about where the `Templates` folder is located.

The number of files you can have open at the same time depends on available working memory only.

Open

Applies to Arbortext IsoDraw CADprocess only.

The **File ▸ Open** command displays a pop-up menu you can use to open existing Arbortext IsoDraw documents and files stored in certain foreign formats.

Open File from Arbortext IsoDraw and Other 2D Files

After the **Open** command has been selected the following dialog box is displayed:

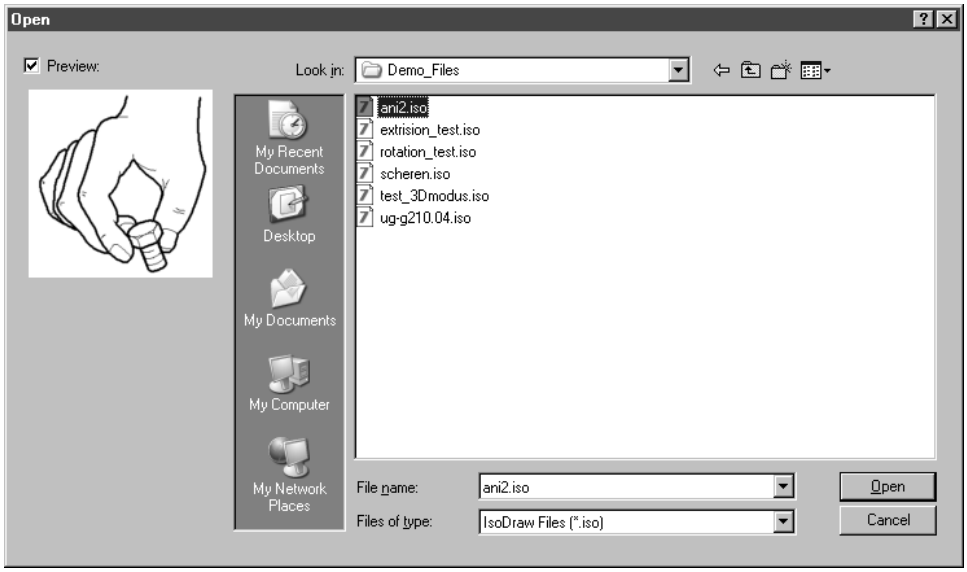

Select a file by clicking it with the mouse. A preview of the selected Arbortext IsoDraw file will appear if the **Preview** box is checked. In addition to files in Arbortext IsoDraw format, raster formats (TIFF, BMP etc.) are also previewed. Arbortext IsoDraw files are only stored with a preview if the corresponding option is set in the preferences (see Preferences on page 108). Open the file by clicking **OK**.

All the folders and Arbortext IsoDraw files are displayed in the selection area. If you wish to read in a file in a foreign format, you may do so by using the list **File Format** to control exactly which files are displayed in the selection area.

Note

If you are running Windchill Workgroup Manager (WGM) for Arbortext IsoDraw and you want to open a document or file that is managed in Windchill, you must click the ***Windchill*** *button in the* ***Open*** *dialog box. For further instructions, choose* ***Help ▸ Windchill Workgroup Manager Help****. In the Workgroup Manager Help Center, navigate to the* ***Workgroup Manager for IsoDraw Guide*** *topic. You can also find an overview of Windchill PDM actions in the Arbortext IsoDraw Help Center. Choose* ***Help ▸ Help Center****. In the Arbortext IsoDraw Help Center window, navigate to* ***Extensions ▸ Windchill PDM Actions Overview****.*

Arbortext IsoDraw Files

If you have selected `IsoDraw files`, only those files will be displayed which have been created in an Arbortext IsoDraw format.

Note

If you are using CGM as the standard file format, this will also be displayed.

Foreign Format Files

If you select one of these options the selection window shows files of the type in question. These documents include e.g. drawings from CAD programs that you want to edit or scanned photos which you can use as templates for tracing.

In the case of raster files, the contents of the file are created as an image element in a new document with the original name and the extension `.iso`. This image element can then be edited (see Edit Image on page 198 for further information).

All Files

The **All files** setting displays all the files contained in the folder you have selected, regardless of their format. You can also select files which have been generated by other programs or whose format cannot be clearly identified.

Arbortext IsoDraw can recognize a number of different file formats and is able to convert these files into the Arbortext IsoDraw format. If you select and open a file, Arbortext IsoDraw automatically examines the content and begins the conversion to its own data format. If the format of the selected file is unknown, a corresponding error message will be displayed.

If the file format can be read, additional dialog boxes will appear, depending on the format, which will enable you to control data import.

Note

The separate Arbortext IsoDraw Data Exchange Reference *deals with this subject in greater detail. It describes the various formats and relevant options.*

Current Documents

The entries below the separator in pop-up menu **Open file** contain the names of the last files which have been saved. When you select the name in the menu, the file is opened without a dialog box being displayed.

Open File from 3D Files

The import process for 3D files is initiated using the same approach as when opening 2D files. Use the **File** ▸ **Open** command to open a dialog box showing the folders or files on your data medium.

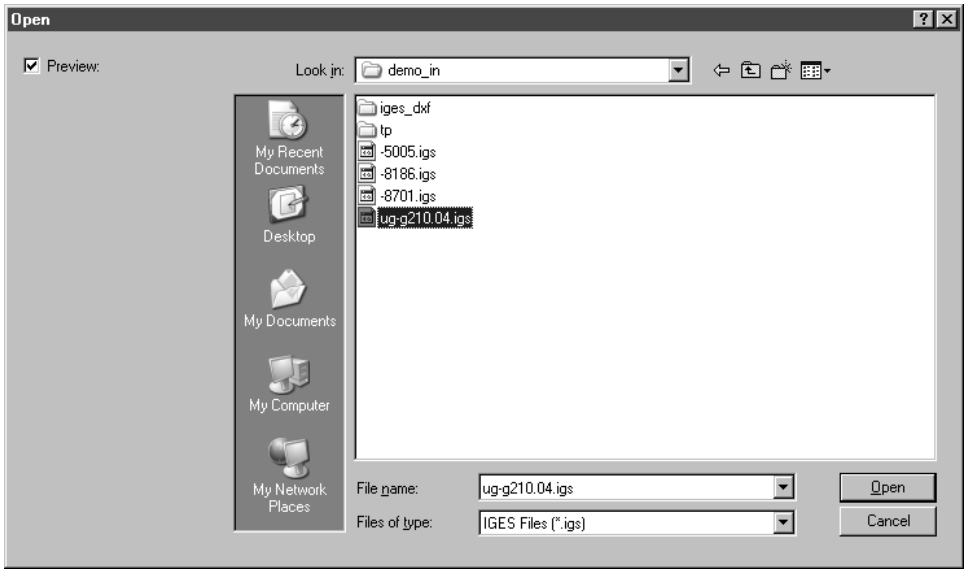

Select **All files** from the pop-up menu. This setting displays all files in the selected folder irrespective of their format. This allows you to select all files generated by other programs. If you know the file format, you can select this under **File format**. All the files of this format type in the selected folder are then displayed. Click the mouse to select the required file. Open the file by clicking **Open**.

Read File

While the file is being opened, Arbortext IsoDraw automatically examines the content and begins converting it to its own data format.

Note

If Arbortext IsoDraw aborts the file import, this is because either the data format is unknown or the file is faulty. In the latter case, a log file may be generated which has the same name as the import file and the extension `.log`*. This file is saved in the same folder as the source file. The log file contains information in text form as to why the file could not be loaded. Further information on what causes errors during loading can be found in the* 3D Mode Tutorial.

When loading the file format, additional dialog boxes will appear (depending on the particular format) which allow you to control the data import process. The dialog boxes always open with the same settings that were used the last time the file format was opened.

Read File for IGES, VRML, and Wavefront

With a number of formats such as IGES, VRML and Wavefront, a structured import process is used for the 3D data. Because of this additional functionality, the dialog boxes for the structured import are described below using the example of format IGES. All dialog boxes for these formats and the dialog boxes for the other two formats AutoCAD DWG and DXF are described in the sections on these formats in the *Arbortext IsoDraw Data Exchange Reference*.

When a file is selected in IGES format, the following dialog box opens for importing IGES files:

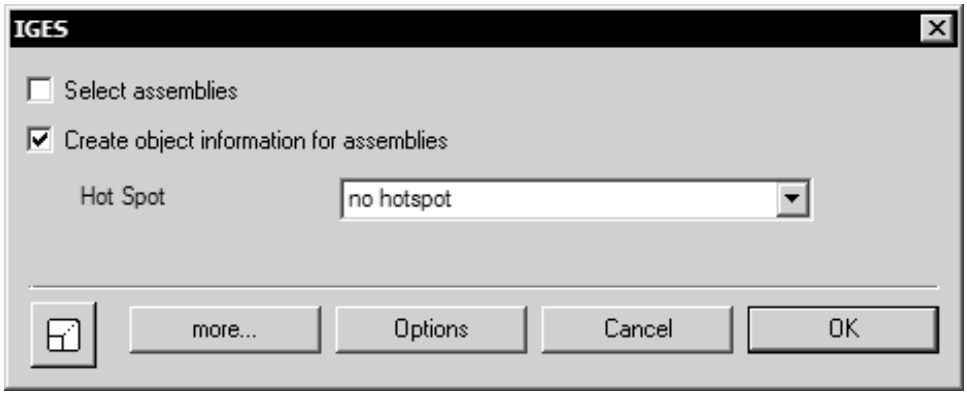

Select Assemblies

If you select this option, the **Selection of Structures** dialog box appears when the file is opened. You can use this to select, which assemblies are to be imported. If you do not select this option, all assemblies in the file will be imported.

Create Object Information for Assemblies

The pop-up menu allows you to select one of the two setting options.

If you select **No hotspot**, **object info** is created for each assembly. The name in each case corresponds to the designation assigned in the CAD system for the particular assembly.

If you select **Lines of object**, a hotspot will be generated in addition to the object info. This allows you to trigger an action later by simply clicking the object.

If you do not select the option, the name **Group** will appear in the object window for each assembly once import has been completed.

Since only surface elements and solids (entity 186) are required for automatic conversion of 3D data to a technical illustration, it is possible with data in IGES format to ignore a large number of other elements during conversion.

To make the appropriate setting, click **Options**. A further dialog box appears:

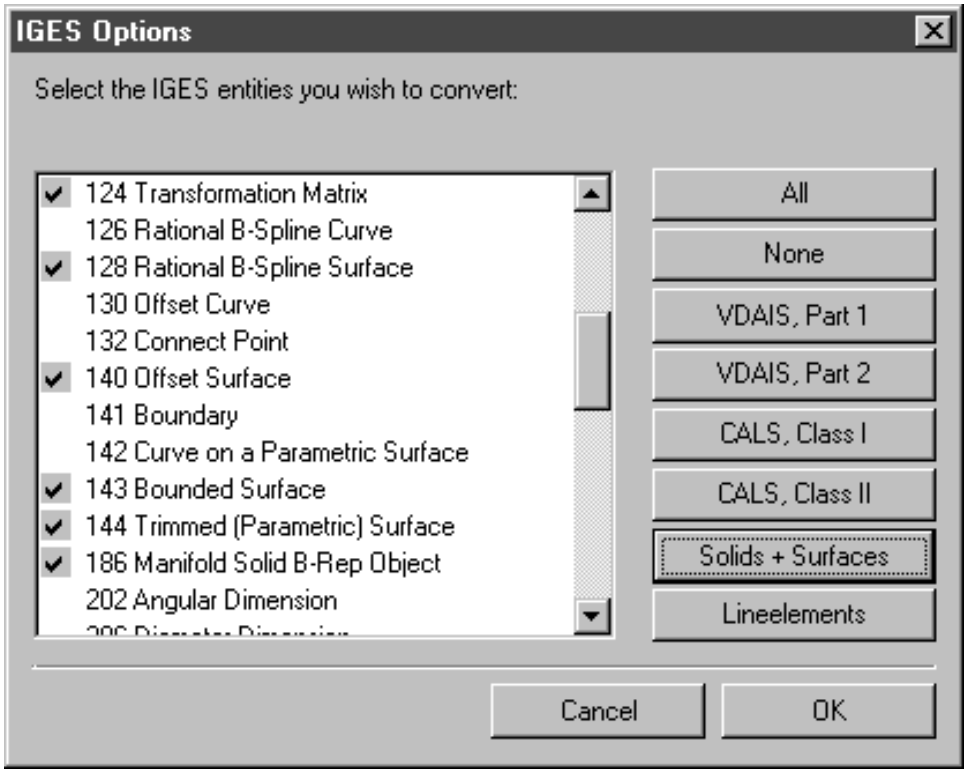

If you click **Solids + Surfaces**, only the elements actually required for conversion will be selected. All elements preceded by a tick have been selected. Click **OK** to confirm your setting. You are returned to the initial dialog box for importing the format (here IGES).

Note

If you want to import multiple 3D files of the same format with the same specifications for processing assemblies, you can select the settings as a general default. Choose ***Edit ▸ Preferences****, then click the import symbol for the format. The dialog page for the format then appears. Select the required setting and deselect* ***Show dialog****. Click* ***OK****. The settings are then applied automatically when importing files.*

Clicking **Cancel** in the opening dialog box cancels the import process. Clicking **OK** confirms that you are happy with your entries. Even without selecting the **Select assemblies** option, the file is converted and is available for further processing in 3D mode.

If you have chosen **Select assemblies**, a further window opens.

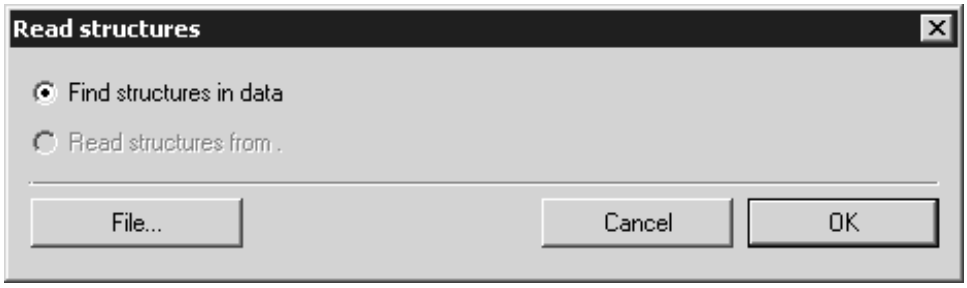

Find Structures in Data

If you select this option, all specified assemblies or elements will be recorded together with their names and structures. Clicking **OK** in the dialog box opens a further dialog box entitled **Selection of Structures**. This displays the recorded assemblies and elements of the file in structured form. If the file appears in 3D mode after import is complete, you will find the same structures in the object window.

Read Structures from igs.xml

If the file already has a structure file, the name of the file will be displayed here. (See Export on page 27.) Selecting this option results in Arbortext IsoDraw CADprocess accessing a file already saved in XML format for selection of the structures. This cuts import time quite considerably, particularly when files are very large. In situations where the option cannot be selected despite there being a structure file (grayed out), the latter will no longer be located at the original storage location. You can search the file by clicking **File**.

The following dialog box appears:

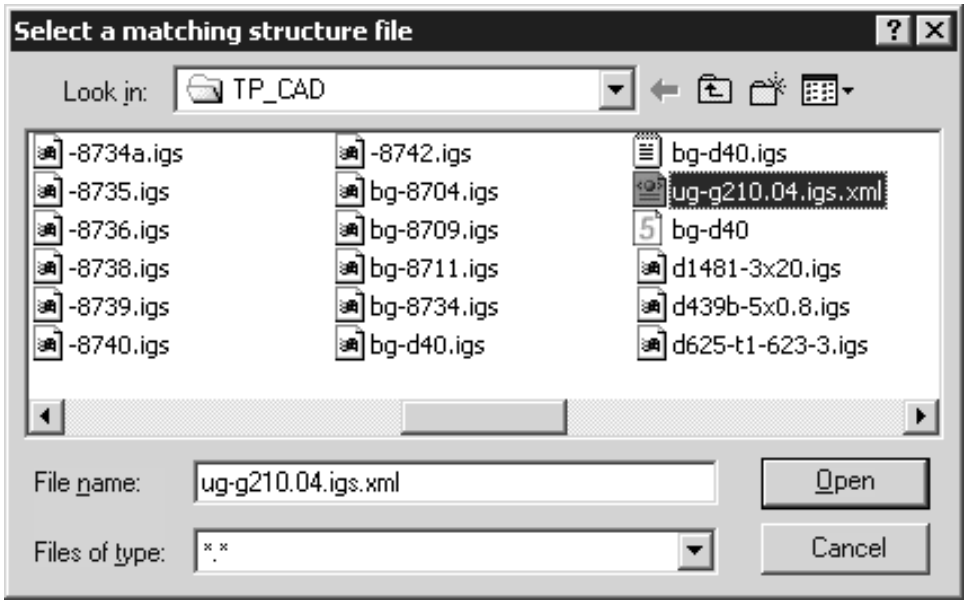

Click the file you require. Clicking **Open** returns you to the **Read Structures** dialog box. The file name is displayed. The file is used for the structure display.

If the file name has been changed, the wrong file selected or the contents do not agree with the current file, the structure file will be rejected. The option can then no longer be selected (grayed out). Repeat the search or recreate the structure via **Find structures in data**.

Clicking **Cancel** returns you to the opening dialog box for the import process. Clicking **OK** confirms that you are happy with your entries.

A further dialog box opens:

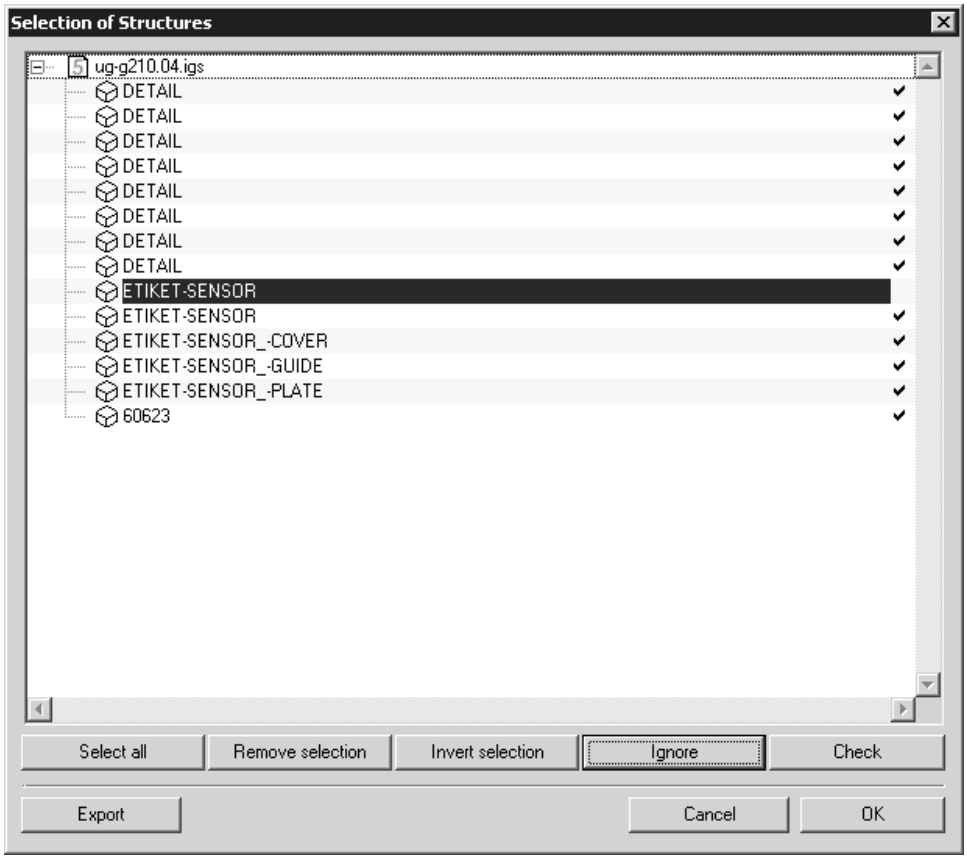

Selection of Structures shows the assemblies and elements together with their names in a tree structure. Clicking the **+** symbol in front of the file name opens the top level of the structure. Holding down the CTRL key and clicking the **+** symbol, reveals the entire tree structure of the assemblies. One click on the **+** symbol turns it into a **-** symbol. Clicking the **-** symbol in front of the file name closes the structure display. You can use the structure display to specify which assemblies are to be imported. Clicking the name selects an assembly. Holding down the CTRL key while clicking names enables you to select several assemblies in succession. If you hold down the SHIFT key, all the assemblies between the one, which is already selected, and the one you are currently clicking will be selected. Clicking on the far right, behind the name of the assembly, tells you whether an assembly will be imported or not. A tick indicates that the assembly will be imported.

The functions of the five keys below the structure display will help you to specify which assemblies or elements are to be imported.

Select All

Click this button if you wish to select all assemblies. This function is useful if you only want to import individual assemblies. Once you have made your selection, click the **Ignore** button. Then select the desired assemblies one after the other while holding down the CTRL key. Select the assemblies by clicking **Select**.

Remove Selection

Clicking this button removes the selection. Whether an assembly in the selection has been selected or ignored remains unaffected by the removal.

Invert Selection

Clicking this button cancels selection of the selected assemblies and, at the same time, selects all other assemblies in the structure. Like **Select All**, this function is useful if you only want to import individual assemblies. Select the assemblies you want to import. Then click the **Invert Selection** button. All assemblies in the structure that you do not want to import are now selected. Then click the **Ignore** button.

Ignore

All assemblies, which are displayed without a tick, are not imported. You can cancel selection of assemblies. Select the assemblies you do not want to import. Click the **Ignore** button. The tick behind the name disappears. If an assembly that contains subassemblies is not ticked, all the subassemblies will also be ignored.

Selecting

If you have selected **Find structures in data** a tick indicates all assemblies and/or elements in the file. The tick indicates that the assemblies will be imported.

If you use the saved structure file (XML format), for example, you can also select assemblies or elements without ticks. Select all the assemblies you require. Click the **Select** button. A tick appears after all the names. If an assembly has been selected which contains subassemblies, these are also selected automatically.

Export

Selecting **Export** lets you save the file structures.

If you want to import a file for the first time, you should save the file structures first, which is particularly important with large files. You can use this structure file for recent imports of the file (see **Read Structures** dialog box). This not only saves time, but is also useful if you want to always ignore specific assemblies or elements. Clicking **Export** opens the following dialog box:

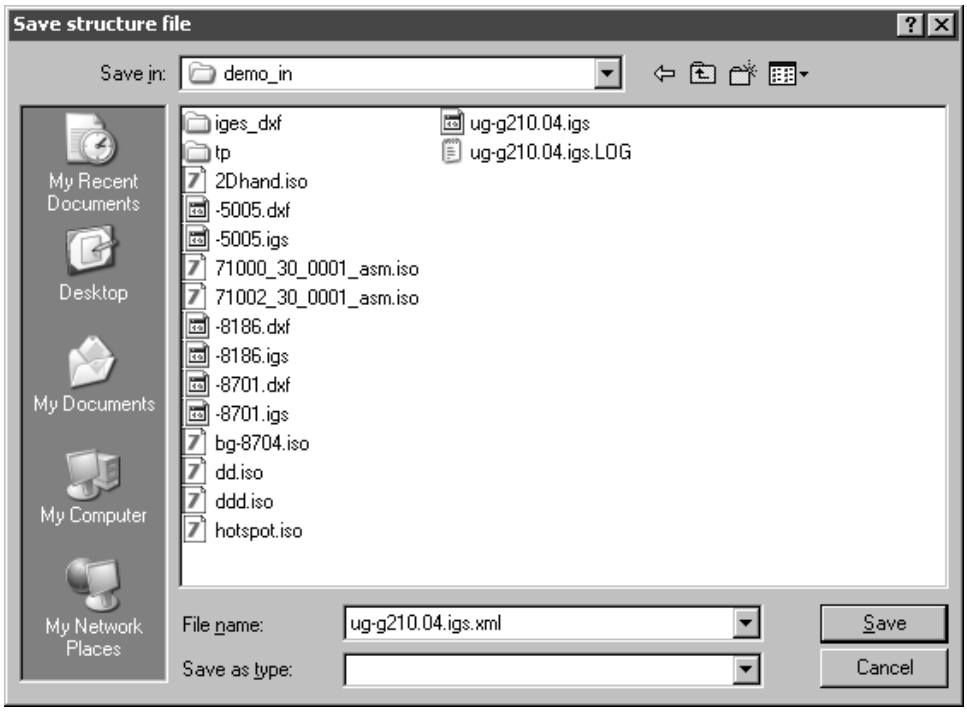

The file name is already defaulted. Clicking **Save** saves the file in XML format. Clicking **Cancel** exits the dialog box without saving the file.

Once you have completed your settings in the **Selection of Structures** dialog box, click **OK**. The file is converted and appears in 3D mode for further processing. Clicking **Cancel** returns you to the **Read Structures** dialog box.

Close

Activating this command causes the active window to be closed. You get the same effect if you click the **Close** box in the title bar of the current window.

If you have not yet saved your document since making changes to it, the program will inquire whether you wish to do so before the document is actually closed.

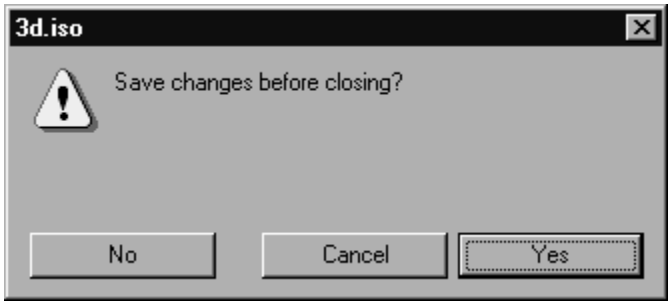

Note

Selecting the ***Exit*** *command closes all windows. You can also close all windows (without exiting the program) by double-clicking the close box of a window while holding down the* ***ALTkey****. You will, however, be asked in each case whether you wish to save unsaved changes*

Save

Selecting **Save** saves the active file in its current form.

In Windows, the following dialog box appears when a drawing is saved for the first time:

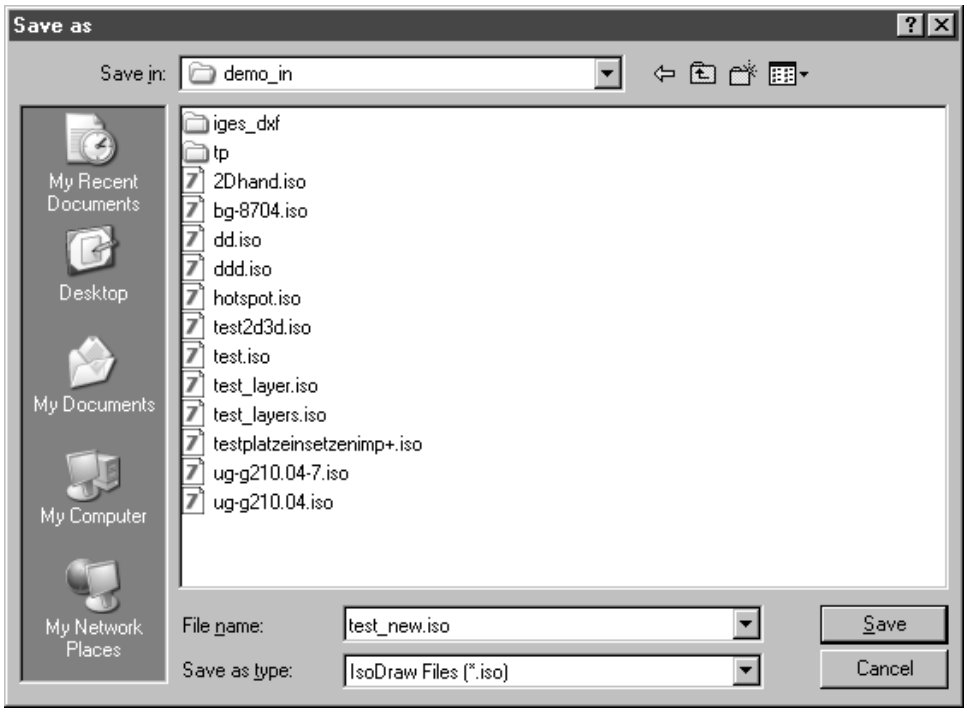

This dialog box is similar to ones you will find in other programs and allows you to define a folder and a name for your file. The file name is then displayed in the window's title bar. It also appears in the **Window** menu.

Click **Save** to create the file.

You can save any subsequent changes to your illustration by selecting the **Save** command at regular intervals. The dialog box no longer appears.

You can specify the following options when saving a file:

Format

This option can only be accessed if you select the **Save as** command.

Using the **Save** command will create a file in Arbortext IsoDraw format. This file can only be read using version 7.0 and above of Arbortext IsoDraw. The **Save as** command allows you to save in formats used by older versions of Arbortext IsoDraw.

Note

If you use CGM as the standard format, you will create a CGM file during saving which is based on the settings defined in the preferences (see information on the CGM format in the Arbortext IsoDraw Data Exchange Reference.

Save As

Use **Save as** on the **File** menu to open the **Save as** dialog box and then save a copy of a file with a different name, in a different location, or in a different Arbortext IsoDraw format.

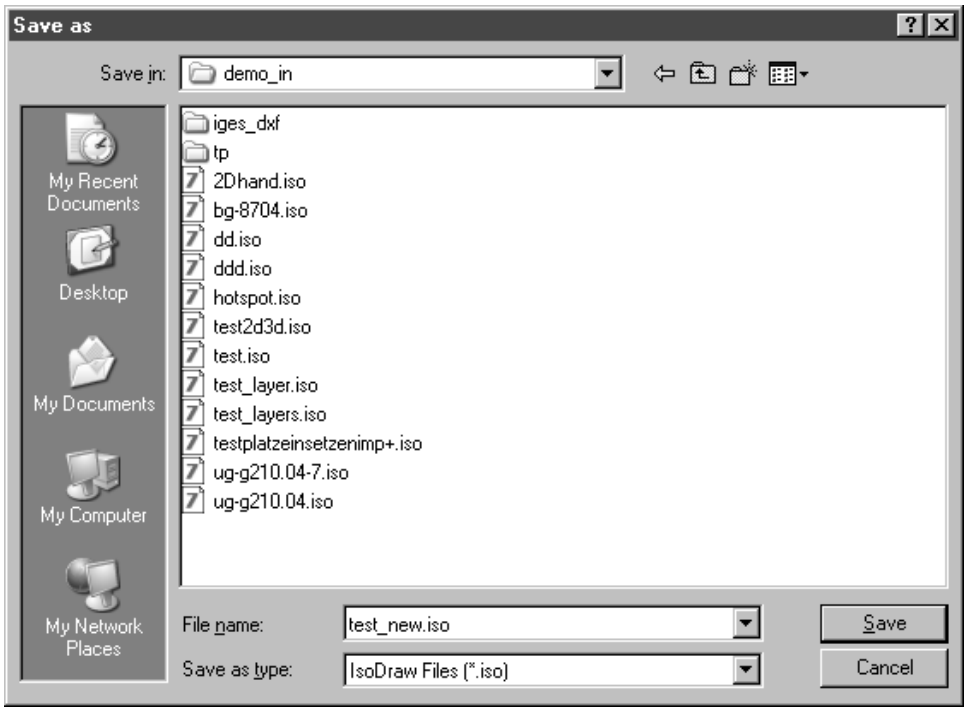

Save As: Different Location or File Name

When you save a file in a different location or with a different file name, it is saved in the latest Arbortext IsoDraw native file format by default.

Note

ISO is the native file format unless ***Use CGM as native file format*** *is selected on the* ***CGM Export*** *preferences panel. If CGM is the native file format, the* ***Save as*** *command is not available in 3D mode because CGM is a 2D format. (See CGM in the* Arbortext IsoDraw Data Exchange Reference.*)*

1. On the **File** menu, click **Save as**.
2. In the **Save in** list, click the drive or folder where you want to save the file. The location you choose becomes the default **Save** location. If the file was previously saved in a different location, that version will remain unchanged.
3. Type a new or different name in the **File name** box. If the file was previously saved with a different name, that version will remain unchanged.
4. Click **Save**.

Save As: Older ISO File Format

If you need save a file for use in a older version of Arbortext IsoDraw, select the older ISO file format in the **Save as type** list.

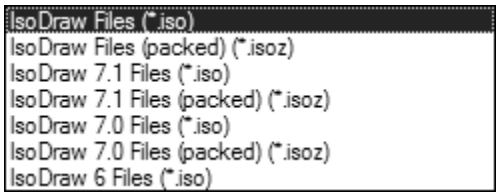

Caution

Some newer features are not saved when you save a file in an older ISO format. Therefore, before you save a file in an older format, save it in the latest format first, and then save it with a different file name in the older format.

1. On the **File** menu, click **Save as**.
2. If you want to rename the file (recommended), in the **File name** box, type a new name. If the file was previously saved with a different name, that version will remain unchanged.
3. In the **Save as type** list, click the older ISO file format that you want to save the file in. For example, click **IsoDraw 7.1 Files (*.iso)**, **IsoDraw 7.0 Files (*.iso)**, or **IsoDraw 6 Files (*.iso)**.

   ### *Note*

   IsoDraw 6 Files (*.iso) *is not available if the file you are saving contains 3D data.*

4. Click **Save**. The file is saved in the older format.

Save As: Packed ISOZ File Format

If you want to publish ISO files, you can save them in **IsoDraw Files (packed) (*.isoz)** (ISOZ) format. ISOZ files can be viewed and manipulated in Arbortext IsoView the same as ISO files. ISOZ files require less storage space than ISO files—especially 3D ISO files.

Caution

Do not use ISOZ as an archive format for ISO files. Arbortext IsoDraw does not save all the data in an ISO file when you save it as an ISOZ file. For example, thumbnail previews are not saved in ISOZ and the amount of 3D data retained in ISOZ is much less than ISO.

To save an ISO or CGM (2D only) file in ISOZ format:

1. On the **File** menu, click **Save as**. The **Save as** dialog box opens.
2. If you want to rename the file, in the **File name** box, type a new name for the file. If the file was previously saved with a different name or format, that version will remain unchanged.
3. In the **Save as type** list, click the ISOZ file format that you want to save the file in; for example, the latest version, **IsoDraw Files (packed) (*.isoz)**, or an older version; **IsoDraw 7.1 Files (packed) (*.isoz)** or **IsoDraw 7.0 Files (packed) (*.isoz)**.

   ### *Note*

   *If you have unsaved changes in your file, you must save it in native ISO or CGM (2D only) format before the ISOZ format will appear on the **Save as type** list.*

4. Click **Save** to save a reduced-size version of the ISO or CGM file in the selected ISOZ format.

Revert

The **Revert** command allows you to display the document in the version you last saved it in. The content and settings for the window correspond to the selected template file.

You cannot undo this command. Therefore, you must confirm whether you really do wish to cancel all the changes in the dialog box which appears next:

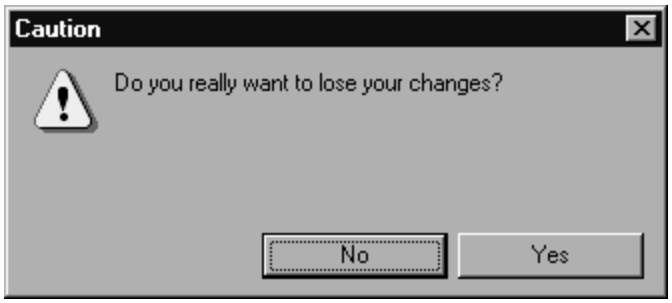

Compare Files

The **Compare files** command can be used to compare the content of two files, e.g. if you have used an existing drawing in order to create a new drawing from it. If you want to check what changes have been made compared with the existing drawing, selecting this command allows you to easily recognize the changes. All the deleted, changed and new elements are shown and a different color is used for each of these three categories.

Open the file (in this case BA2) in which you want to see the changes. Now select the command **Compare files**.

The following dialog box appears:

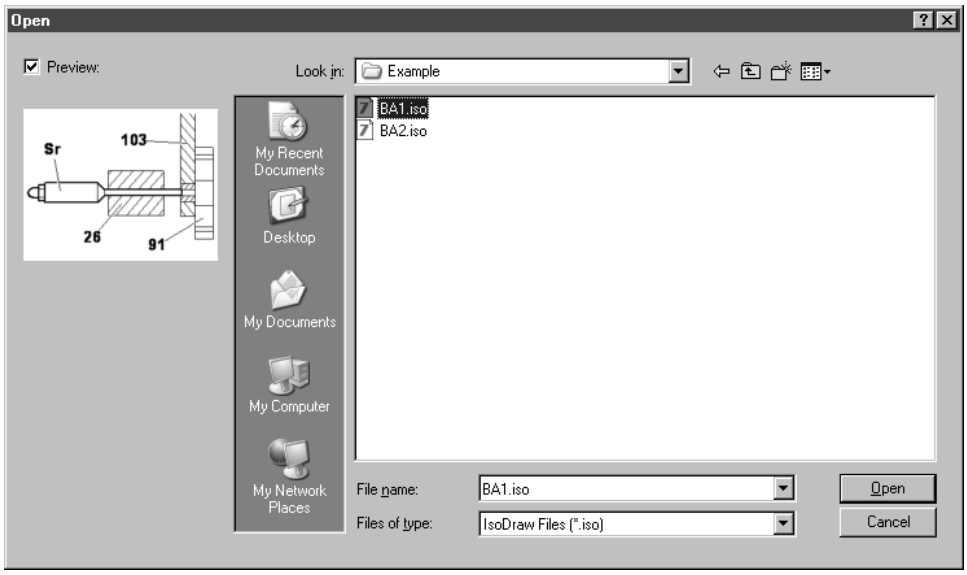

Select the file (in this case `BA1`) with which you want to make the comparison. Confirm your selection by clicking **Open**.

All the changes in relation to the comparison file then appear in the open file. The changes are highlighted in color both in drawing mode and in preview mode. A change type is assigned to each of the three colors. A distinction is made between deleted, changed and new elements. The colors can be set using menu command **Edit ▸ Preferences**. To do this, call up the **Compare** dialog page (see also Preferences on page 108).

The examples show file `BA1` and file `BA2` before and after the command has been selected. To make the changes easier for you to see, the grid in the background is omitted from the illustrations.

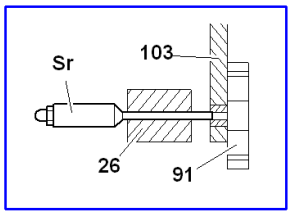

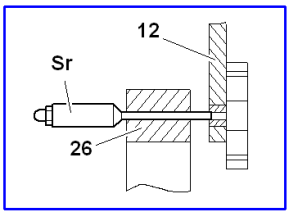

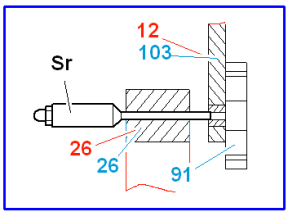

All deleted elements are on new layers. The number of new layers depends on which layers the deleted elements in the comparison file are assigned to. Each new layer has the same name as the layer in the comparison file with the addition of `_C`.

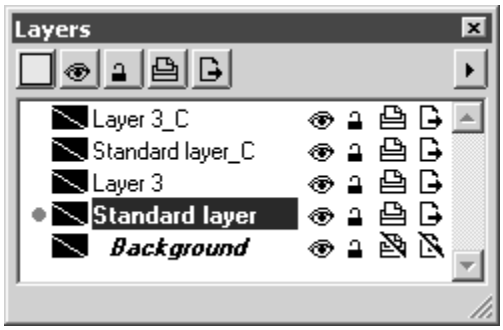

You can check the new layers in the same way as normal layers.

You can print and export the file with the changes displayed.

Note

The comparison colors for the assigned pens cannot be changed. Therefore, if you want to save the file with the changes displayed for further use, you should save the file under a new name.

Import Layers

The **Import Layers** command allows you to import individual layers of a stored Arbortext IsoDraw file into the current illustration. The following dialog box will appear when this command is selected:

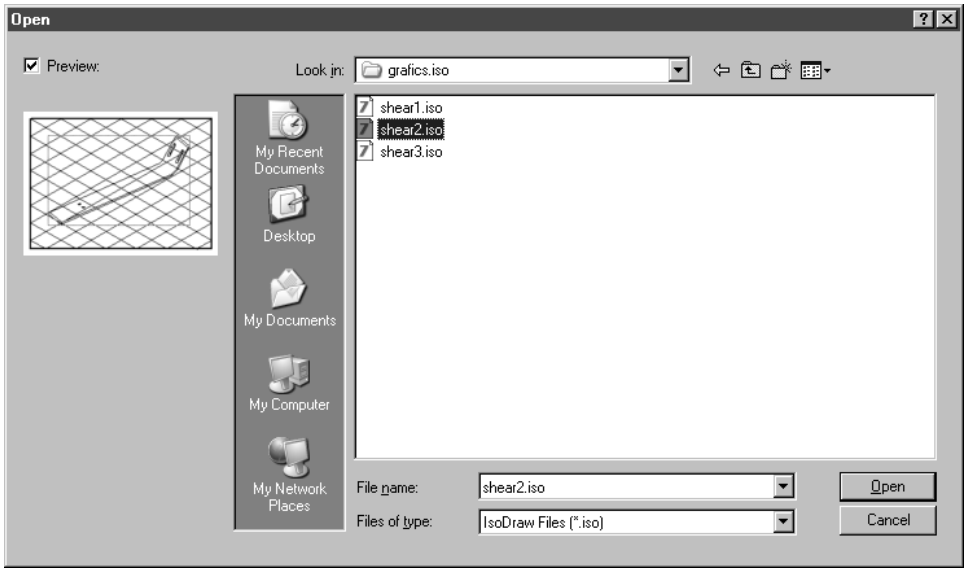

Select the illustration containing the layers you wish to import and confirm by clicking **Open**.

A window now appears listing the layers this file contains:

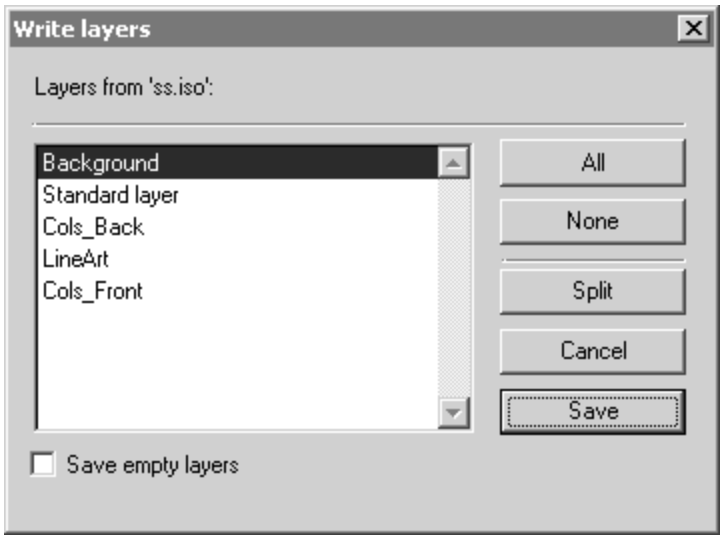

Use the mouse to select the layers you want to import. By holding down the SHIFT key at the same time, you can select a series of layers. By pressing the CTRL key, you can select individual layers from those you have selected.

The **All** and **None** fields are designed to aid you in your selection.

If you select the **Import empty layers** check box, you will also import layers containing no elements. If you do not select this check box, these layers will be skipped.

Clicking **Import** confirms your selection, clicking **Cancel** aborts the procedure.

After import has been completed, you can use the layer window to check which layers have been imported.

Note

If the current illustration already contains a layer having the same name as one of the layers to be imported, the name of the layer to be imported is extended by the word `copy`*. This is designed to prevent existing elements from being overwritten.*

Save Layers

The **Save Layers** command allows you to save one or more layers from an illustration that has been opened. Selecting this command causes the following dialog box to appear which we have already met in conjunction with the **Save** command:

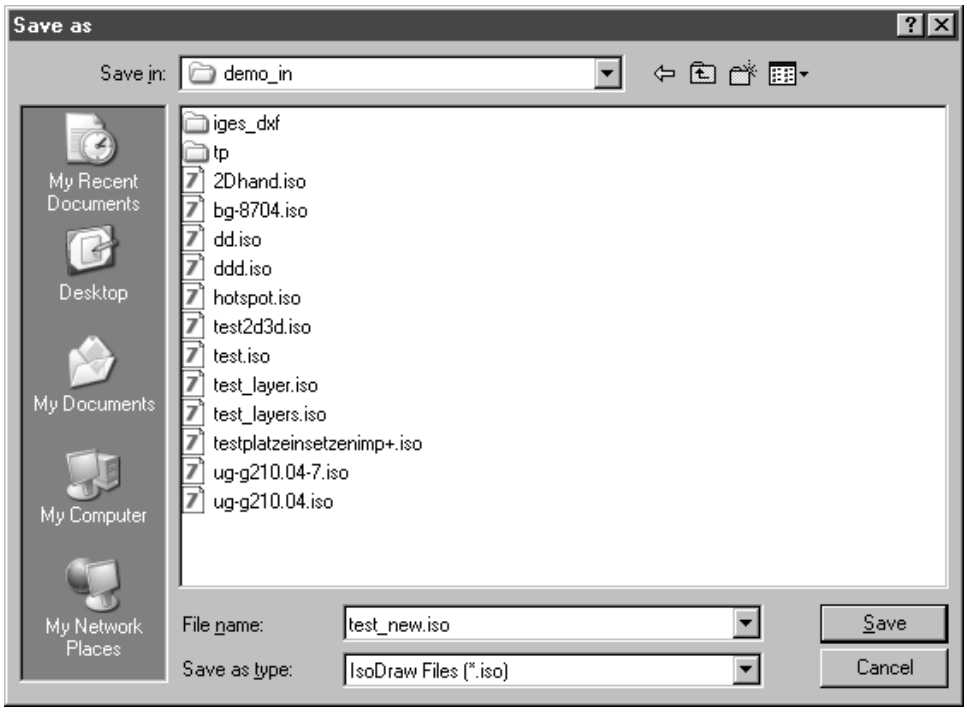

The name of the open file is automatically displayed. If you would like to rename it, enter the new name for the file here. Click **Save**. The following window appears:

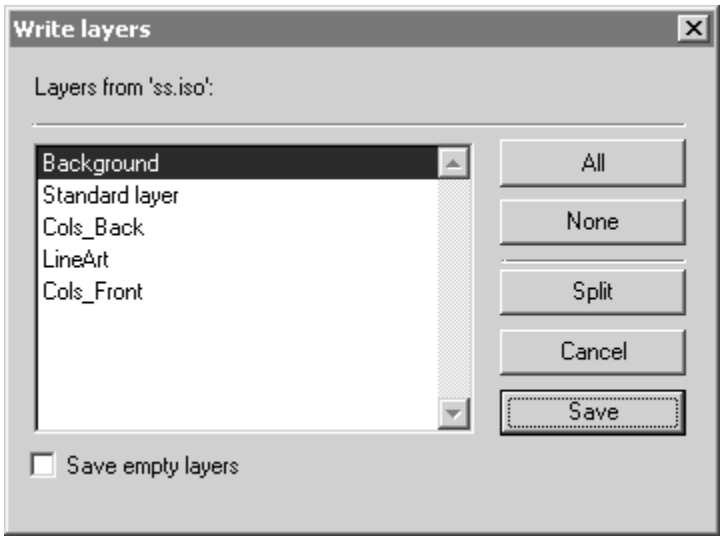

The list shows you all the layers of the active illustration. Select the layers you want to save. By holding down the SHIFT key at the same time, you can select a series of layers. By pressing the CTRL key, you can select individual layers from those you have selected.

The **All** and **None** fields are designed to aid you in your selection.

If you select the **Save empty layers** check box, you will also save layers containing no elements. If you do not select this check box, these layers will be skipped.

There are two ways of saving the layers. Click **Save** if you want all selected layers to be saved in a single file. You can also save each individual layer in its own file, however. In this case, click **Split**.

You can end the procedure without saving by selecting **Cancel**.

If all layers are to be written to a single file, a single file will be created bearing the name you have entered.

If you wish to distribute the layers to individual files, this is done in the following way: For each layer, a file is created whose name is a combination of the name you have entered and the name of the layer saved in this file.

To illustrate this point, let us assume you have entered and confirmed the name `Axis`. After that you have selected layers **3** and **4** and clicked **Split**. Two files will be created with the names `Axis.Layer 3` and `Axis.Layer 4`.

Note

If you use CGM as the standard format, you will create a CGM file during saving which is based on the settings defined in the preferences (see information on the CGM format in the Arbortext IsoDraw Data Exchange Reference.

Export

The **Save** command allows you to save an illustration in Arbortext IsoDraw format. This format can only be read by Arbortext IsoDraw. The **Export** command, on the other hand, can be used to save Arbortext IsoDraw documents so that they can be read and edited by other programs. A number of different formats are available for this purpose.

The following dialog box will appear when this command is selected:

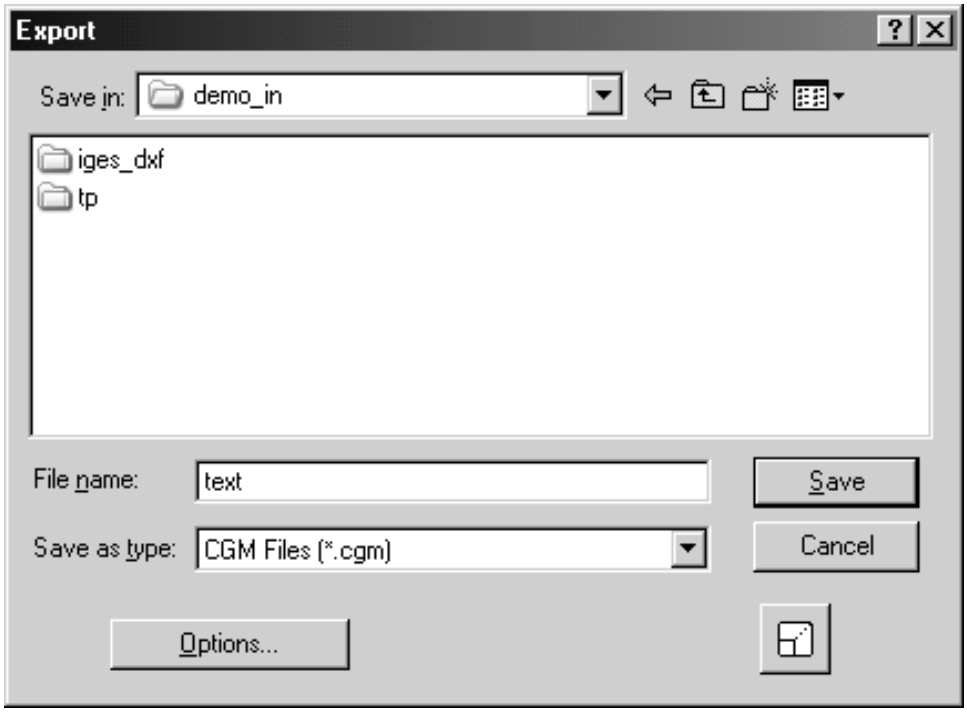

Select the required format from the list. Arbortext IsoDraw will attach some characters to the suggested file name depending on the format you select. The file extension is required for the Windows platform. If the exported file is moved to a different hardware platform, this extension may also be required there.

File Format

Every file format you select is saved in accordance with the settings in the **Preferences** command.

In addition to choosing the target format, you also have the following options:

Options

Click the **Options** button if you want to check the preferences before saving. A dialog box will appear which shows you the current settings for the selected format. You can change these settings here without having to select the **Edit ▸ Preferences** command. Your changes will then be made the new standard preferences for this format.

Scale

A click on the **Scaling** button opens the following dialog box:

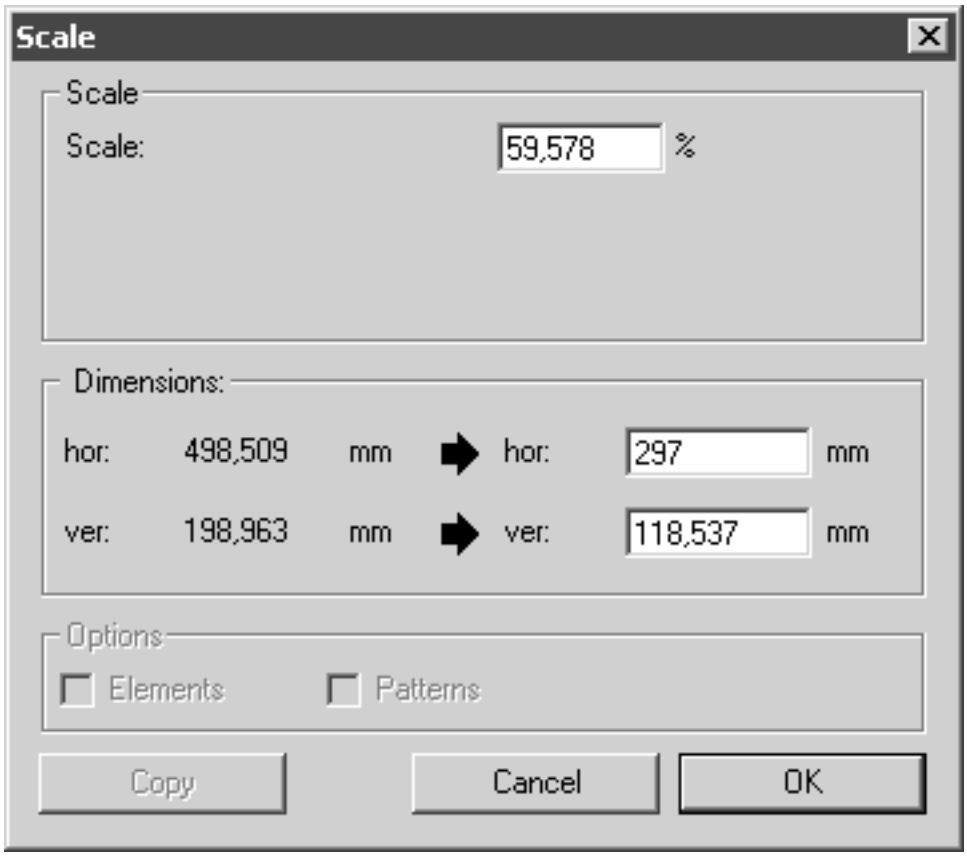

In practice, you will often create illustrations in Arbortext IsoDraw which are in a larger format than you will actually need in print. The printout will rarely be in a format larger than letter format, however.

The dialog box allows you to set the scale of the illustration you want to export. Arbortext IsoDraw calculates the area which your drawn elements take up. If this area is greater than letter format the scaling button flashes when the export dialog is opened. This is intended to remind you that it may be best to reduce the output size.

Scale

The scale in the scaling dialog box is automatically set to the value which would be needed to scale the output to letter format size. As with **Scale** you can set the required size by entering a scale in the entry field. If you confirm with **OK** the scale is applied, it is not applied if you select **Cancel**.

Alternatively, you can also enter the value using a mathematical formula. This may save you having to work out a percentage value. When entering values, observe the calculation rules. Information on how to enter values can be found in the *Drawing Basics Tutorial.*

Dimensions

In the fields next to **hor**: or **ver**:, the corresponding values appear for the extent of the selection when the percentage values are entered under **Scale**. If you want to define an exact extent for the selection, you can enter this extent here directly in the entry fields. The actual values are indicated to the left of the entry fields.

The original drawing is not changed by your entries.

Note

Of course, you can also change the scale if the button is not flashing.

If you ignore the flashing button or do not enter any scale, the illustration will be exported at a scale of 100%.

Export Formats

The list of file formats supported by Arbortext IsoDraw has grown steadily and now includes all important standard and exchange formats in the graphic and CAD sectors. New versions of programs or revisions of standards mean that the filters for these formats need to be constantly updated. To enable us to document these changes quickly and effectively, we have compiled descriptions of the individual formats and relevant dialog boxes in the *Arbortext IsoDraw Data Exchange Reference.*

Note

It is only possible to export elements of those layers which are identified in the layer window as being exportable. All other layers are skipped.

Please note that it is often impossible to export an illustration to another format and retain the same quality and detail. . You can find more about this subject in the Arbortext IsoDraw Data Exchange Reference.

Exporting from 3D Mode

You can export from 3D mode into a range of formats. In principle, the **Export** command is used in the same way as described earlier.

Various raster formats are available for export. In Arbortext IsoDraw CADprocess, VRML and Wavefront formats are also available

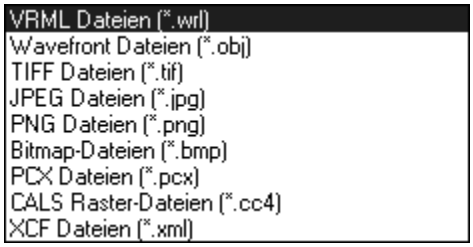

Exporting out of 3D mode is particularly interesting when you want to make use of a colored drawing.

VRML and Wavefront

Applies to Arbortext IsoDraw CADprocess only.

Colored drawings exported into VRML or Wavefront can then be edited with special rendering software.

There are no special preferences for exporting into VRML and Wavefront. There are therefore no dialog boxes relating to options for these formats. Surface elements are exported.

General notes on exporting from Arbortext IsoDraw can be found in the *Arbortext IsoDraw Data Exchange Reference.*

Note

It is better to export into VRML format. When working in this format, object names and the object structure are also exported. This object information is retained for any editing work that follows.

Raster Formats

Which raster format you should use depends primarily on how the file is to be used or edited.

Note

Applies to Arbortext IsoDraw CADprocess only.

Imagine that you have prepared an imported 3D file for export and that the file contains surfaces with color rendering which you want to use for e.g. a product brochure. You have changed colors and optimized the depiction of the colors in ***Smooth rendering*** *display mode, as necessary.*

Before selecting the ***File ▸ Export*** *menu command, you must ensure that you have set the display mode in which the drawing is to be exported. For export purposes, a drawing optimized in* ***Smooth rendering*** *mode must be depicted on the screen in this display mode.*

After selecting the desired raster format, there are various options in the export dialog box relating to editing and settings. You can find further information on the setting options of raster formats in the
Arbortext IsoDraw Data Exchange Reference under the individual formats.

Note

When working with extensive 3D data, you should first scale the drawing to reduce storage requirement. If you would like to see the drawing in its scaled size, temporarily scale it in 3D mode. Otherwise, set scaling in the export dialog.

Place

Applies to Arbortext IsoDraw CADprocess only.

Place allows you to position all files with 2D and 3D data in file formats supported by Arbortext IsoDraw on an illustration.

Link2Source™ technology can be used to adjust attributes during placing operations. You can also freely choose the orientation on the drawing. Since Link2Source™ creates a live link to the source file, changes in the source file are automatically updated in the placed file.

Opening a File in which Data is to be Placed

Open the Arbortext IsoDraw file where you want to place the drawing using **File ▸ Open**. If you want to create a new document for the drawing, use **File ▸ New**. Save the new file in Arbortext IsoDraw format. You can now place the selected file.

Note

Further information on the ***Open****,* ***New*** *and* ***Save*** *commands can be found in the relevant sections on the menu commands.*

Note

Applies to Arbortext IsoDraw CADprocess only.

If you want to place files with 3D data, turn to the description of *Placing 3D Files on page 50**. If you want to place files with 2D or raster data, read the following section.*

Note

If you are running Windchill Workgroup Manager (WGM) for Arbortext IsoDraw and you want to open or place file that is managed in Windchill, you must click the ***Windchill*** *button in the* ***Open*** *dialog box. For further instructions, choose* ***Help ▸ Windchill Workgroup Manager Help****. In the Workgroup Manager Help Center, navigate to the* ***Workgroup Manager for IsoDraw Guide*** *topic. You can also find an overview of Windchill PDM actions in the Arbortext IsoDraw Help Center. Choose* ***Help ▸ Help Center****. In the Arbortext IsoDraw Help Center window, navigate to* ***Extensions ▸ Windchill PDM Actions Overview****.*

Placing 2D Files and Raster Data

Note

If you use the CGM as the standard format, you will not be able to place files, since CGM does not support this.

Settings for Placement

When performing placing operations, the settings used for importing the data format are those set on the dialog page for the relevant data format under **Preferences**.

If you choose **Edit ▸ Preferences** and then click the symbol for the file format on the left side of the **Preferences** window, the dialog page for that file format will appear. The dialog page for **DXF** format is shown here by way of example.

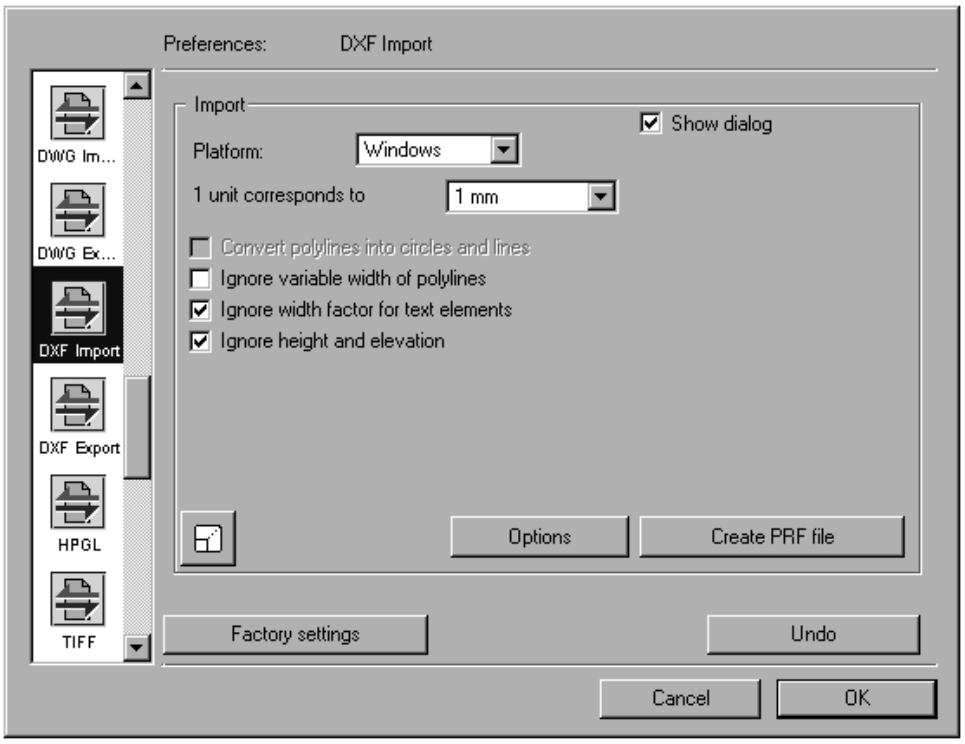

This dialog page allows you to change the settings. The new settings will be applied the next time files containing data in this format are placed.

Placing files is always started in the same way. After selecting the menu command, the following dialog box appears showing the folders and files on your data medium.

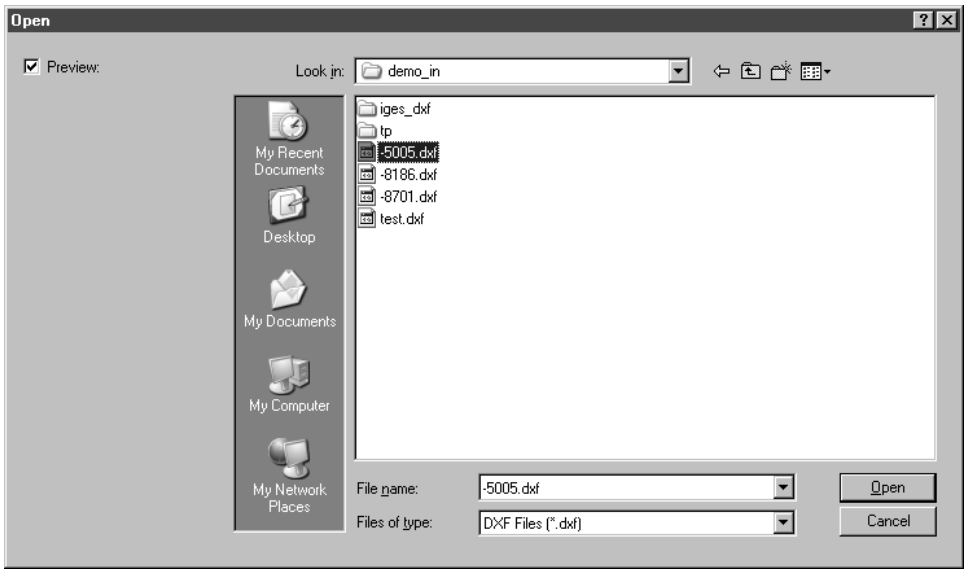

Select **All files** from the pop-up menu. This setting displays all files in the selected folder irrespective of their format. This allows you to select all files generated by other programs. If you know the file format, you can select this under **File format**. Only the files of this file type in the selected folder are then displayed. Click the mouse to select the required file. Start placing the file by clicking **Open**.

While the file is being placed, Arbortext IsoDraw automatically examines the content and begins converting it to its own data format.

When converting the file format, additional dialog boxes will appear (depending on the particular format) which allow you to control the data loading process. The dialog boxes are always opened with the settings made under **Edit ▸ Preferences...** menu.

Note

If Arbortext IsoDraw aborts the file import, this is because either the data format is unknown or the file is faulty. In the latter case, a log file may be generated which has the same name as the import file and the extension `.log`*. This file is saved in the same folder as the source file. The log file contains information in text form as to why the file could not be loaded.*

Note

Applies to Arbortext IsoDraw CADprocess only.

Further information on what causes errors during loading can be found in the 3D Mode Tutorial.

Once the file has been completely loaded, the drawing appears in the Arbortext IsoDraw window. What is more, the link to the file is maintained via the Link2Source™ technology.

The file name appears in the **Placed files** window of the attribute window along with the path to the storage location. Double clicking on the entry calls up information on the placed file (see section Placed Files Window on page 61 and Show Attribute Window on page 352).

The file name also appears in the object window. The light blue square in front of the name indicates that it is a placed file (see section Object Window on page 63 and Show Object Window on page 427).

Notes on File Formats

EPS Format

EPS files generally contain a TIFF preview which is used to display the graphic on the screen. This preview serves solely as a reference for the graphic and has no effect on printing quality on PostScript™-compatible printers.

If the EPS file contains no preview, a rectangle will be displayed which is the same size as the placed graphic.

Note

EPS files from Arbortext IsoDraw or Adobe Illustrator can also be imported.

Arbortext IsoDraw files which include placed EPS files can only be exported in EPS format. The placed EPS file will be lost in the case of other file formats.

Processing Placed Files

A placed drawing/illustration from 2D data or raster images appears as a single entity in the Arbortext IsoDraw window. Individual elements cannot be selected. As a result, only a few functions are available for editing in the Arbortext IsoDraw window.

These are: Delete, move and the three transformations (scale, rotate and reflect).

Exporting Arbortext IsoDraw Files with Placed Files

An Arbortext IsoDraw file containing placed files can be exported in all export formats supported by Arbortext IsoDraw . Since other formats are generally unable to support placed files, the resulting elements are converted individually.

Note

Refer to the special features of EPS, WMF, and PICT formats in *Notes on File Formats on page 46*.

Element Info

You can specify whether or not you want to retain the connection with the 2D data in **Element info**. Select the placed file and choose **Element** ▸ **Element info**. The following dialog box appears:

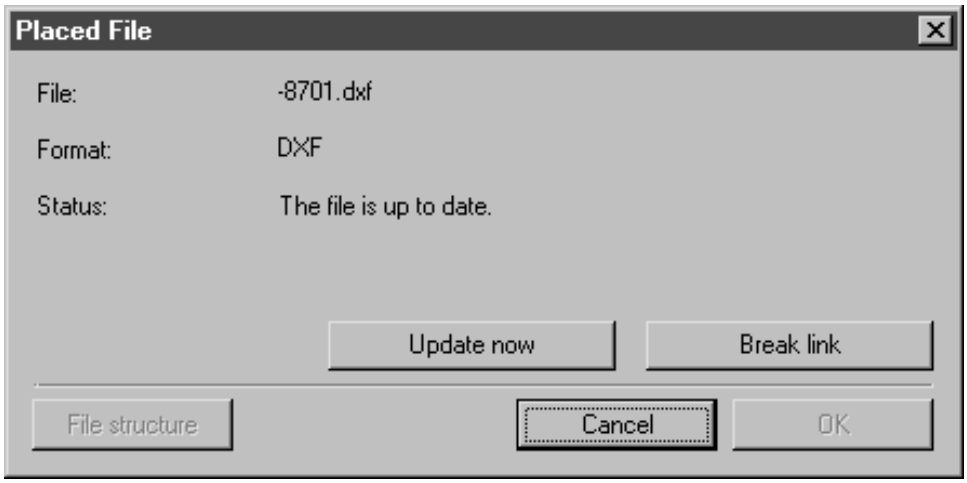

On opening the dialog you will see information on the file name, format and status. You cannot select the **OK** button. Clicking **Cancel** exits the dialog box without any changes being made. If you have executed the **Update now** command, you can confirm this by clicking **OK**. The **Cancel** button is no longer active. Clicking **Break link** automatically closes the dialog box.

Update Now

If you click this button, the file will immediately be updated.

Break Link

Clicking this button breaks the link to the original file. The data is imported into the current illustration. The link cannot be restored.

Note

Applies to Arbortext IsoDraw CADprocess only.

The ***File structure*** *button can only be selected in the case of 3D files with existing structures.*

Placed Files Window

If you click the symbol button for **Placed files** at the far right of the **Attributes** window, the **Placed Files** window appears. The window shows the names of the placed files for the current Arbortext IsoDraw file with their path to the storage location and the file format.

Double clicking the entry or selecting the **Edit** command (click on the arrow in the top right-hand corner of the window) calls up the following dialog box.

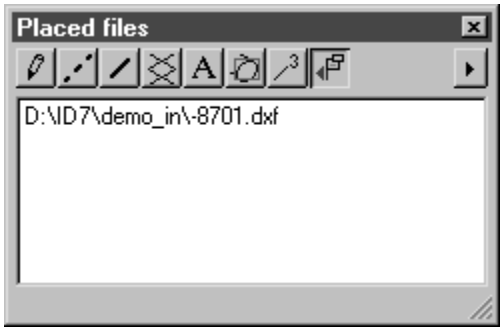

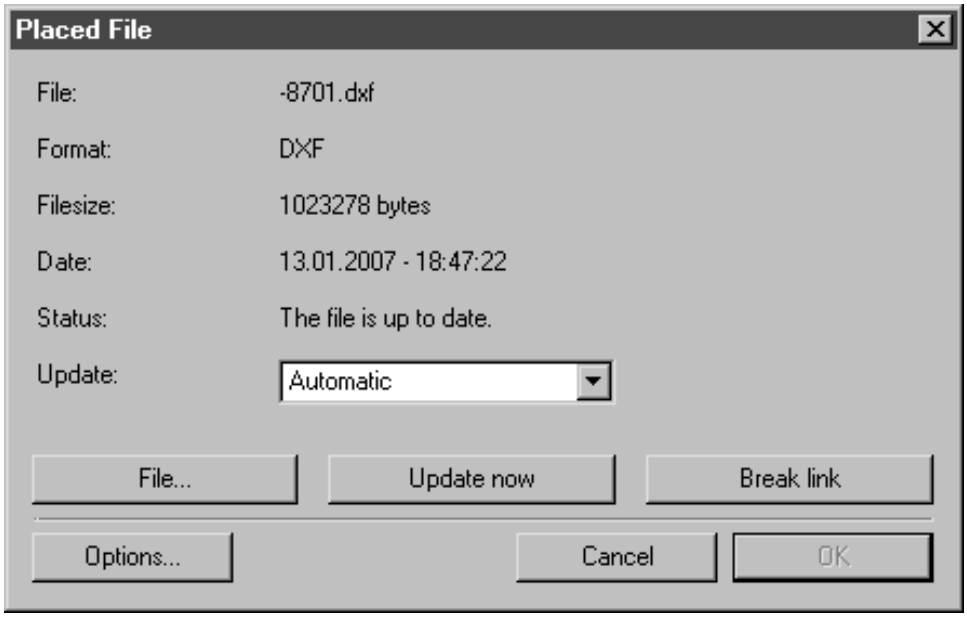

This allows you to specify whether the link to the 2D data is to be preserved and how the data is to be updated.

On opening the dialog you will see information on the file name, format and size, the date the file was last updated and the status of the file. You cannot select the **OK** button. Clicking **Cancel** exits the dialog box without any changes being made. If you have changed any settings, you can only confirm these with **OK**. The **Cancel** button is no longer active.

Note

Entries and changes in the dialog for placed files often cause the original file to be reloaded. Since this changes the data considerably, these entries cannot be undone. Instead, re-open the dialog and restore the settings to their old values.

Update

There are three ways in which you can update the file. If you select **Automatic**, the representation of the placed file will be updated as soon as the original file changes. If **Notify when changed** is selected, you will be informed when the original file is changed. You can then decide whether you wish to perform an update. If you select **No update**, any changes, which are made to the original file, will be ignored. You can change this setting at any time.

File

If the file cannot be accessed at the current time, you will see a corresponding entry in the **Status** field. Clicking the **File** button opens a dialog box where you can search for the file. You can also select another file, which is to replace the existing one.

Update Now

If you click this button, the file will immediately be updated.

Break Link

Clicking this button breaks the link to the original file. The data is imported into the current illustration. The link cannot be restored.

Options

With some data formats, clicking **Options** displays the dialog box for the options of the format for the placed file. This is illustrated below by the dialog box for DXF format:

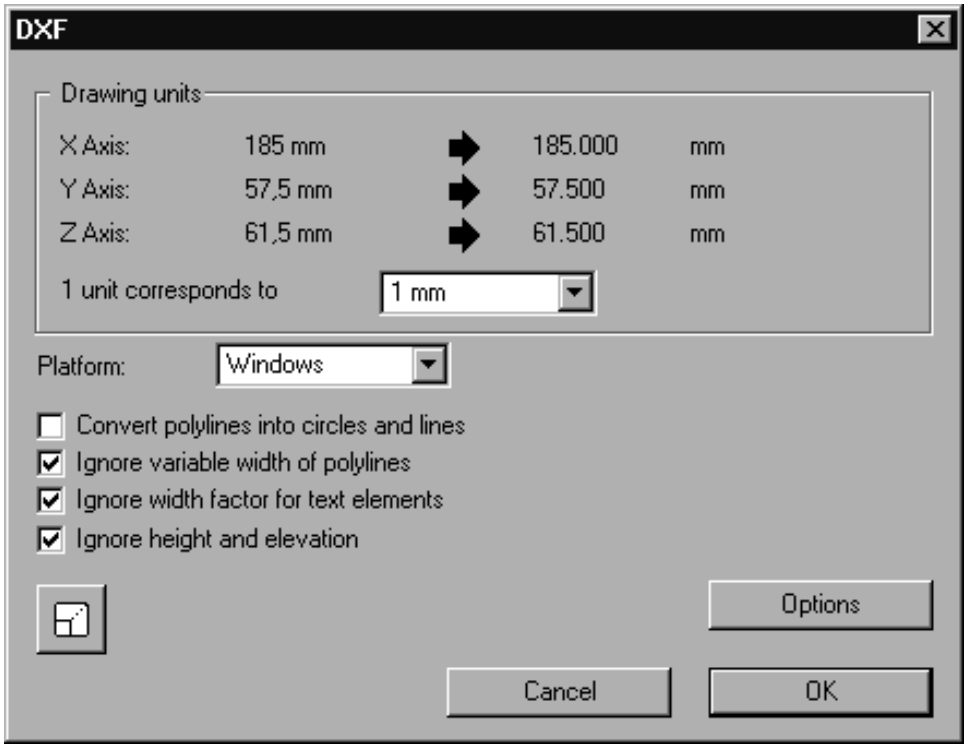

Information on the setting options for individual formats can be found in the *Arbortext IsoDraw Data Exchange Reference*. Clicking **OK** implements the changes, clicking **Cancel** discards the changes.

Click **OK** if you have completed the settings for the placed file.

Placing 3D Files

Instead of importing the 3D data, Arbortext IsoDraw CADprocess also allows you to place it directly on the drawing sheet in the Arbortext IsoDraw window. The data is loaded as during the import process and appears in 3D mode with the coordinate system. The placed drawing can then be edited with the tools in 3D mode. Clicking **OK** in the **3D Projection** dialog box displays the drawing as a single entity in the Arbortext IsoDraw window. The drawing can then be converted back to 3D mode at any point using the **3D Transformation** menu command and edited there using the tools.

The advantage over importing lies in the fact that the Link2Source™ technology used for placing retains the link to the 3D file. If the 3D file is replaced by an updated version, the placed drawing is also updated accordingly, irrespective of the perspective or orientation you have selected in 3D mode. When you edit a placed file with the tools in 3D mode, the update may be subject to restrictions. All settings you have selected for the projection will be applied for the update.

Placing Instead of Importing

Applies to Arbortext IsoDraw CADprocess only.

Even if the settings for **Place** and **Import** in the dialog boxes are the same, there are still considerable differences in arriving at an optimum technical illustration and the way in which you use this.

Importing

Structured import with assemblies and object information can be used to influence and change the data at both the import stage and in 3D mode. For example, data can be prepared in 3D mode in the form of a spare parts diagram or additional views can be generated from a selection of assemblies. All these manipulations to the original data are adopted in the 2D illustration.

A new projection of the converted 3D data is created every time **OK** is clicked in the **3D projection** dialog box. The projection appears as a 2D illustration in an untitled Arbortext IsoDraw window. This means that the link to the 3D data has been broken. All the elements in the illustration can be selected individually and edited with the Arbortext IsoDraw CADprocess tools.

Placing

As is the case when importing, a file can also be loaded in structured form when it is being placed. As a result, the same 3D-mode data editing options that are available when importing are also available when placing. In the case of a placed drawing/illustration however, clicking **OK** in the **3D projection** dialog box displays the projection again, in its entirety, in the Arbortext IsoDraw window. Given the same projection and the same setting in 3D mode, the result looks the same. The difference from the import process lies in the fact that the link to the converted 3D data is still intact. The representation is therefore based solely on this data. As a result, only a few functions are available for editing in the Arbortext IsoDraw window.

These are: Delete, move, the three transformations (scale, rotate and reflect) and changes to existing attributes such as **Pens**.

Unlike during the import process, you can edit a placed CAD drawing repeatedly in 3D mode.

You can place several 3D or 2D files on one drawing sheet. You can also add further 3D files to a placed file in 3D mode. You can learn more about this in this section, in the part entitled Several Placed Files in One Arbortext IsoDraw File on page 65. 3D-mode editing for each placed file is carried out individually in one 3D set.

To sum up:

If a CAD file is to be extensively edited both in 3D mode and then in the Arbortext IsoDraw 2D window, the file should be imported. This is particularly important when an update is unlikely.

If, for example, you are using CAD data to create a spare parts catalog, where the data does not require much further editing apart from being exploded, then you should **Place** the data. The fact that files can be continuously updated saves a great deal of time without the quality of the illustrations suffering in relation to the import option.

Placing Using Same Method as Importing

Applies to Arbortext IsoDraw CADprocess only.

While the file is being loaded, Arbortext IsoDraw CADprocess automatically examines the content as during import and begins converting it to its own data format.

When converting the file format, additional dialog boxes will appear (depending on the particular format) which allow you to control the data loading process. The dialog boxes are always opened with the settings made under **Preferences** in the **Edit** menu. With a number of formats such as IGES, VRML, and Wavefront, a structured conversion process is used for the 3D data. Because of this additional functionality, the placement of IGES format data is described below by way of example. All dialog boxes for these formats and the dialog boxes for the other two formats AutoCAD DWG and DXF are described in the *Arbortext IsoDraw Data Exchange Reference*.

Placing an IGES File

Applies to Arbortext IsoDraw CADprocess only.

Placing files is always started in the same way. The **File ▸ Place** command opens a dialog box showing the folders or files on your data medium.

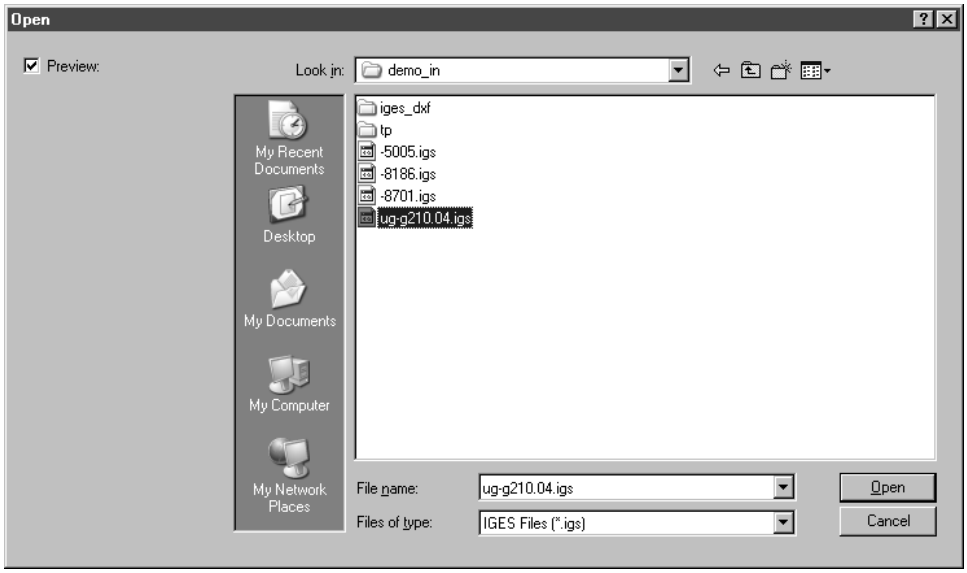

Select **All files** from the pop-up menu. This setting displays all files in the selected folder irrespective of their format. This allows you to select all files generated by other programs. If you know the file format, you can select this under **File format**. Only the files of this file type in the selected folder are then displayed.

Click the mouse to select the required file. Start placing the file by clicking **Open**.

While the file is being placed, Arbortext IsoDraw CADprocess automatically examines the content and begins converting it to its own data format.

Note

If Arbortext IsoDraw CADprocess aborts the file import, this is because either the data format is unknown or the file is faulty. In the latter case, a log file may be generated which has the same name as the import file and the extension (`*.log`) file. This file is saved in the same folder as the source file. The log file contains information in text form as to why the file could not be loaded. Further information on what causes errors during loading can be found in the 3D Mode Tutorial.

When a file is selected in IGES format, the same dialog box opens during placement as the window for importing IGES files:

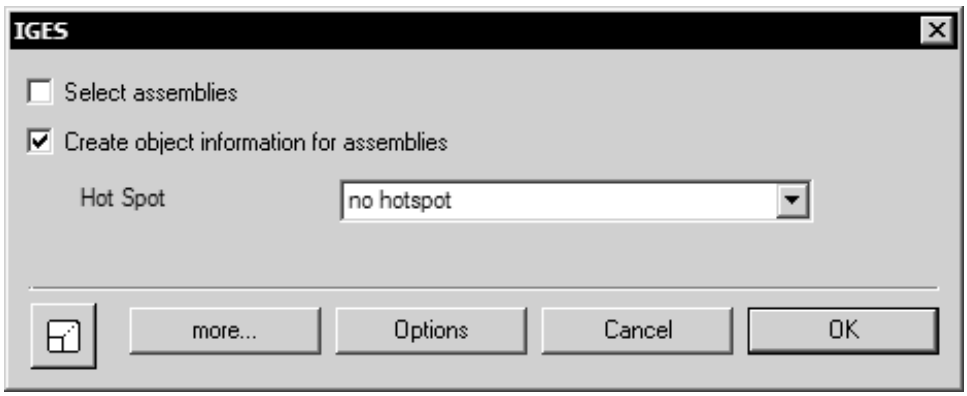

Here you can use **Select assemblies** to set whether the **Selection of Structures** dialog box is to be displayed or not and what object information is to be created. As during import, you can use the **Selection of Structures** window to define what objects (assemblies) are to be placed.

When you click on **Options**, the dialog box for IGES options appears. Here you can change the settings for the import.

When you exit the dialog box with **OK**, the other dialog boxes appear for loading the structures and for selecting the structures in the same way as during import. A detailed description of all import dialogs can be found in the Open on page 18.

Once the file has been completely loaded, the drawing appears in the **3D mode** of the open Arbortext IsoDraw window. Arbortext IsoDraw CADprocess has adopted all 3D information from the converted 3D file. What is more, the link to the 3D file is maintained via the Link2Source™ technology.

Working in 3D Mode

Applies to Arbortext IsoDraw CADprocess only.

You can use this window to determine the perspective and orientation of the drawing and can change the drawing using the tools provided. Working in 3D Mode on page 671 describes the tools. The options for editing using menu commands and the object window when importing structured data can also be used when placing data, provided you have object information (as is usually the case).

Note

It is important to remember that the following limitations apply to the 3D mode functionality when working with placed files:

- *The* ***Direct Selection*** *arrow cursor tool cannot be used for individual surface elements in placed files.*
- *Layer options are unavailable. The drawing lies on the standard layer.*
- *Elements within objects cannot be identified during an update.*

The drawing may be placed far outside the coordinate system if it has been created in its installation position in the CAD system. It is also possible that additional scattered elements from the CAD system have been saved in the 3D data and loaded into Arbortext IsoDraw CADprocess . In this case, click the **Centering** tool.

If you have finished editing the drawing in 3D mode, click the **Convert to 2D illustration** button in the toolbar.

If the option has been selected in the preferences, as when importing 3D data, the **3D projection** dialog box appears with the options for setting the style attributes for a technical illustration.

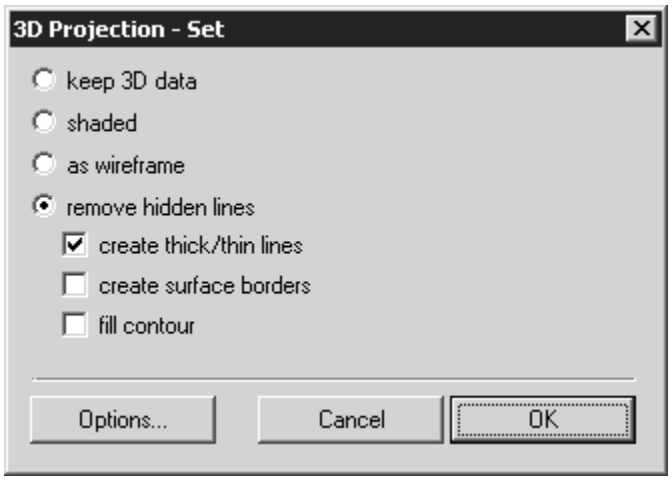

The setting options in this dialog box and in the **Options** dialog box are the same as for imported files (**File** ▸ **Open** command). All the settings are described in detail in the Working in 3D Mode on page 671.

Note

Please note that, unlike during the import process, you cannot delete the lines generated by selecting option ***Create surface borders*** *in the 2D window. If there are too many additional elements visible on the placed file, switch back to 3D mode and disable the option while terminating the 3D transformation.*

Optimizing with Placed Illustrations

Click **remove hidden lines** in the **3D Projection** dialog box, then **Options**. The following dialog box appears as when importing:

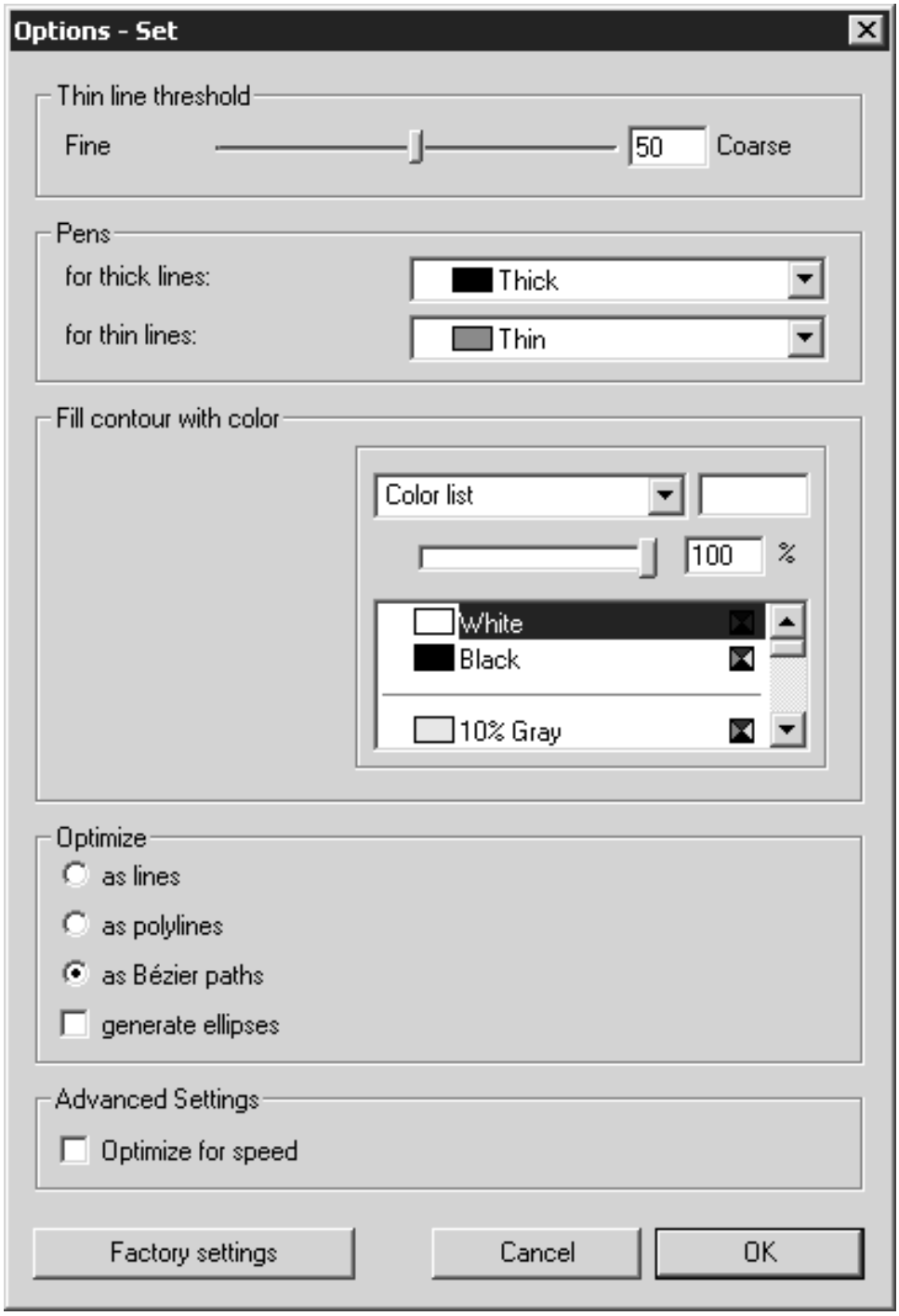

The individual setting options are described in Working in 3D Mode on page 671.

Thin Line Threshold

Since you are unable to edit individual elements in placed illustrations in the 2D window of Arbortext IsoDraw CADprocess , it is particularly important to find the optimum setting for the **Thin line threshold** function. The inner edges (thin lines) inserted during projection cannot be removed.

First, select **Factory settings** (50) for the threshold and take a close look at the result in the Arbortext IsoDraw CADprocess window. If the result is not accurate enough, change back to **3D mode** and adjust the **Thin line threshold** setting. You can change to 3D mode and adjust settings as often as necessary.

Particularly when working with large amounts of data, you can see the results of your settings in the current drawing in 3D mode before initiating the conversion process. This allows you to see a preview of the converted drawing without needing to delay the conversion process. The drawing must be depicted in **HLR** display mode to do this.

To view the preview, select **Edit ▸ Preferences**, then the **3D Options** dialog page. Change the **Thin line threshold** on this dialog page. To make the new setting visible on the drawing in 3D mode, close the **3D Options** dialog page by clicking **OK**.

Note

Particularly when working with IGES files, you can specify the number of triangles that are to be created by adjusting tessellation accuracy. This in turn affects the result of the inner edges that are applied. If you want to change tessellation accuracy you must re-place the 3D data after making the relevant adjustments.

Pens

If you subsequently want to change the attributes of the **pens**, change to 3D mode. All the pens for the placed file will be available there.

Optimize

Under **Optimize**, set **as Bézier paths**. This gives the best result.

After completing 3D-mode editing by clicking **OK** in the **3D Projection** dialog box, the placed file appears as edited on the drawing sheet in the open file.

If you select the drawing, you will see that the marking consists of four red dots. You will not be able to select individual elements of the drawing and will therefore be unable to edit them with the Arbortext IsoDraw CADprocess tools. This is also not necessary, since you can use the technology of Arbortext IsoDraw CADprocess to generate a technical illustration for your spare parts catalog or operating instructions.

If the drawing has to be adjusted further, choose **Element ▸ 3D Transformation**. The placed drawing then appears – as when importing 3D data – in **3D mode**.

Element Info

Applies to Arbortext IsoDraw CADprocess only.

You can specify whether or not you want to retain the connection with the 3D data in **Element info**. You can also call up the **Selection of Structures** dialog box and implement changes. Select the placed file and choose **Element ▸ Element info**. The following dialog box appears:

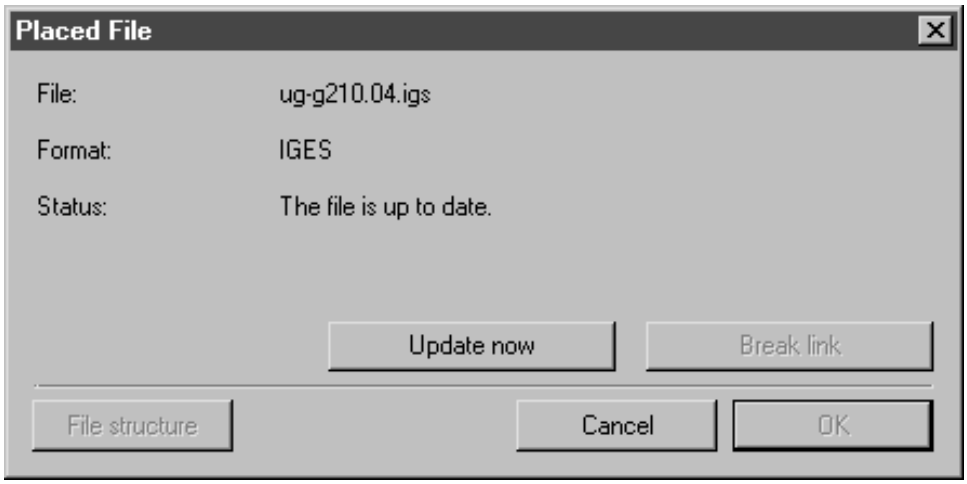

On opening the dialog you will see information on the file name, format and status. You cannot select the **OK** button. Clicking **Cancel** exits the dialog box without any changes being made. If you have executed the **Update now** or **File structure** commands, you can confirm this by clicking **OK**. The **Cancel** button is no longer active. Clicking **Break link** automatically closes the dialog box.

Update Now

If you click this button, the file will immediately be updated.

Break Link

Clicking this button breaks the link to the original file. The data is imported into the current illustration. The link cannot be restored.

Note

While a placed 3D file is in 3D mode, the button is grayed out. The link to the original file cannot be broken.

File Structure

When you click this button the **Selection of Structures** dialog box appears:

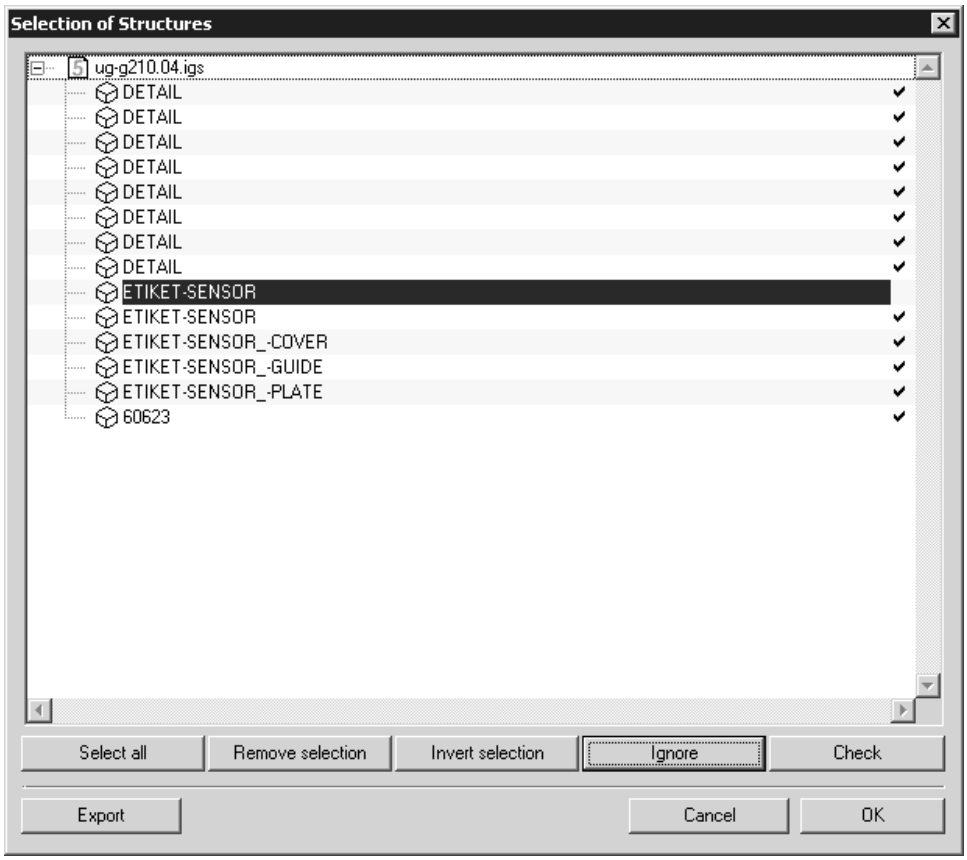

Here you can specify which objects (assemblies) are to be placed. As long as the link to the original file is intact, you can implement changes to the placed structure at any point.

This dialog box is described in the Open on page 18.

Note

*The **File structure** button can only be selected if the **Select assemblies** option has been selected under the data format options. You can select this option at any time in the **Placed File** dialog box (see Show Attribute Window on page 352).*

Placed Files Window

Applies to Arbortext IsoDraw CADprocess only.

If you click the symbol button at the far right of the **Attributes** window, the **placed files window** appears. The window shows the names of the placed files for the current Arbortext IsoDraw CADprocess file with their path to the storage location and the file format.

Double clicking the entry or selecting the **Edit** command (click on the arrow in the top right-hand corner of the window) calls up the following dialog box.

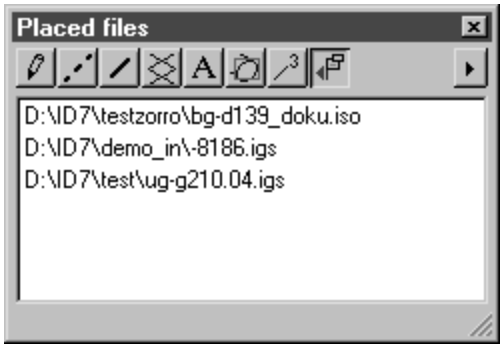

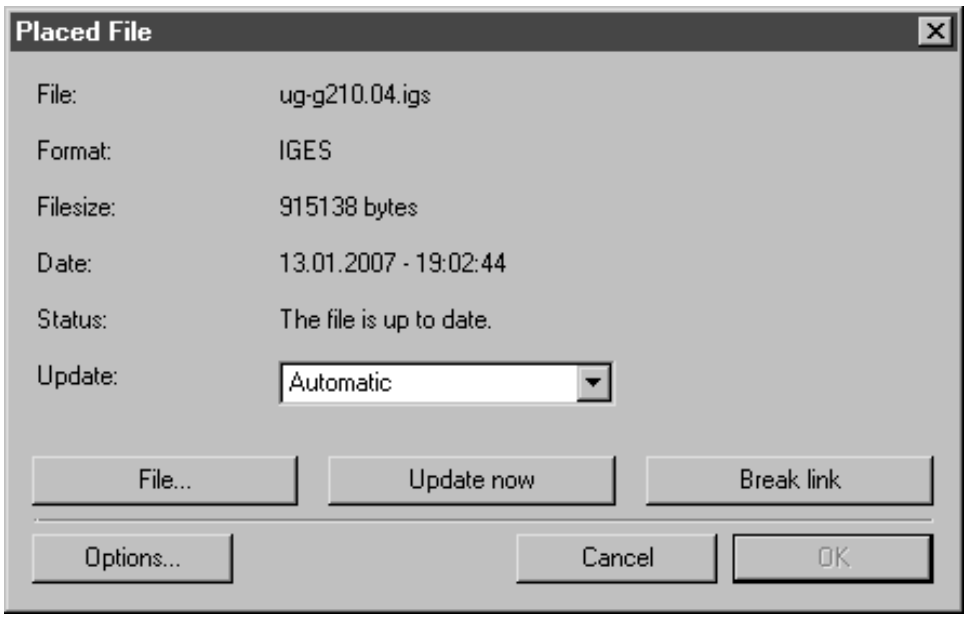

This allows you to specify whether the link to the 3D data is to be preserved and how the data is to be updated.

On opening the dialog you will see information on the file name, format and size, the date the file was last updated and the status of the original file. You cannot select the **OK** button. Clicking **Cancel** exits the dialog box without any changes being made. If you have changed any settings, you can only confirm these with **OK**. The **Cancel** button is no longer active.

Note

Entries and changes in the dialog for placed files often cause the original file to be reloaded. Since this changes the data considerably, these entries cannot be undone. Instead, re-open the dialog and restore the settings to their old values.

File

If the file cannot be accessed at the current time, you will see a corresponding entry in the **Status** field. Clicking the **File** button opens a dialog box where you can search for the file. You can also select another file, which is to replace the existing one.

Update Now

If you click this button, the file will immediately be updated.

Break Link

Clicking this button breaks the link to the original file. The data is imported into the current illustration. The link cannot be restored.

Options

With some data formats, clicking **Options** displays the dialog box for the options of the format for the placed file. With a number of formats such as IGES, VRML, and Wavefront, the first dialog box for format options appears. You can use this dialog box to influence the structured import of the data. This is illustrated below by the dialog box for format IGES:

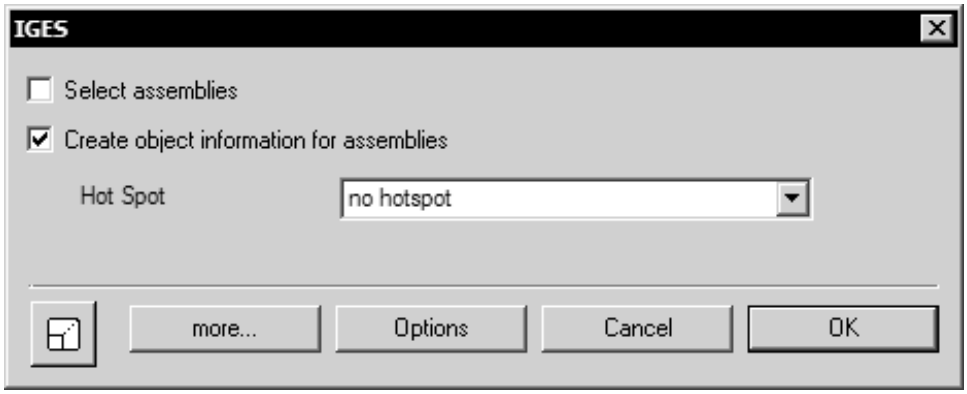

This dialog box is described in the Open on page 18. Further information on the setting options can also be found in the *Arbortext IsoDraw Data Exchange Reference*. Clicking **OK** implements the changes, clicking **Cancel** discards the changes.

Click **OK** if you have completed the settings for the placed file.

Object Window

Applies to Arbortext IsoDraw Foundation only.

Open the **Object** window using the **Window ▸ Show object window** menu command. The name of the placed file appears underneath the file name of the Arbortext IsoDraw CADprocess file and the standard layer. You can edit the placed file using the functions and commands in the **Object** window (see Show Object Window on page 427). The only area where it is not possible to make changes is in the **Object Info** dialog box.

All the objects or groups contained in the original file appear below the filename of the placed file.

Additional groups can appear for each object, depending on the format of the source file. Each of these groups equates to a defined element within the object.

You can use the functions and commands in the object window. You can also select each file that you are placing in its entirety by clicking its name. The structure's objects and groups cannot be selected.

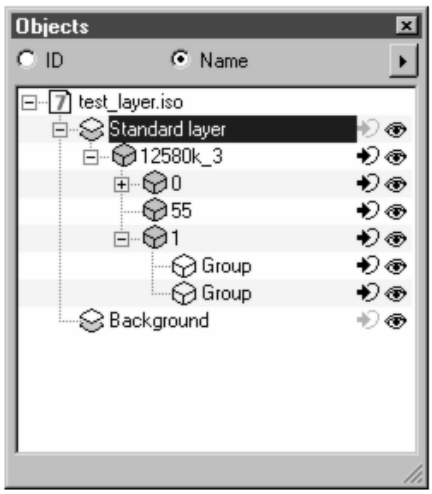

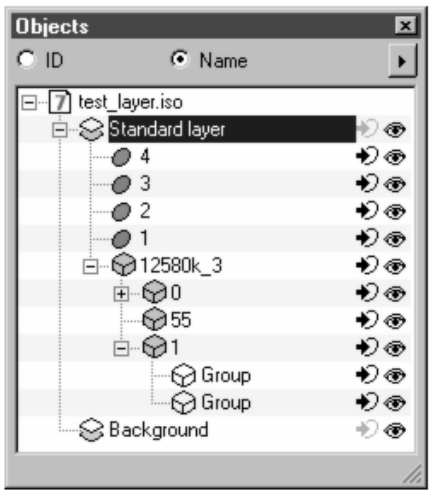

The figures show an object window containing a placed file. The name of the placed file and the objects are identified by a light-blue colored cube. There are additional groups of defined elements within the objects with a - or + symbol. The

pen symbol next to the name of the placed file indicates that the drawing contains an animation. You can see an additional four element symbols in the figure on the right. The symbols stand for callouts that have been generated in the drawing (**Generate callouts for objects** command from the object window's pop-up menu).

Various file types can be placed in an IsoDraw file. Further information on this can be found in the following paragraphs.

Object Window in Arbortext IsoDraw CADprocess

Applies to Arbortext IsoDraw CADprocess only.

In 3D Mode

Open the **Object** window using the **Window ▸ Show object window** menu command. The name of the placed file appears underneath the file name of the Arbortext IsoDraw CADprocess file and the standard layer. You can edit the placed file using the functions and commands in the **Object** window (see Show Object Window on page 427). The only area where it is not possible to make changes is in the **Object Info** dialog box.

Underneath the placed file's name are all the objects or groups contained in the original file and/or that have been selected from the assembly structure. If you change back into 3D mode with a placed file, new IDs are allocated in the object window, the information displayed under the option **Name** does not change.

In 2D Mode

The information displayed in the object window remains unchanged after projection. You can use the functions and commands in the object window. You can also select each file that you are placing in its entirety by clicking its name. The structure's objects and groups cannot be selected.

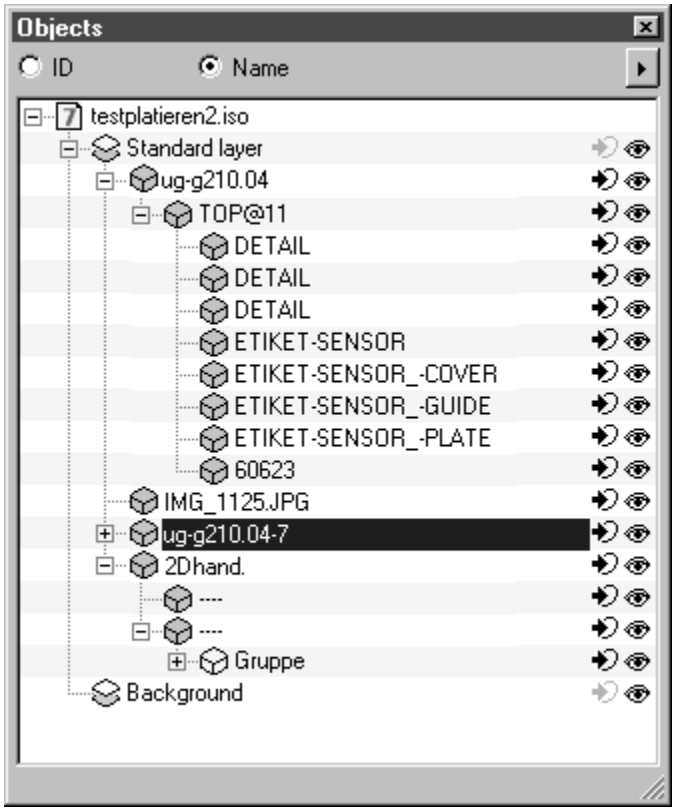

As you can see in the sample object window depicted here, a range of file types can be placed in an Arbortext IsoDraw CADprocess file. Further information on this can be found in the following paragraphs.

Several Placed Files in One Arbortext IsoDraw File

You can place various files with 2D and/or 3D data (with Arbortext IsoDraw CADprocess) on the drawing sheet in an Arbortext IsoDraw file.

Use the **Place** command or the browser window to place a number of files. When using the browser window to place files, click the button for placing. Then click the name of the relevant file from the selection displayed in the browser window. Drag the file onto the drawing sheet.

2D files are placed in 2D mode and can now be edited.

Placing 3D Files

Applies to Arbortext IsoDraw CADprocess only.

3D files appear in 3D mode and can be edited in this mode using the relevant tools. They are then projected into a 2D drawing. Placed 3D files can be returned to 3D mode and edited further at any point using the **Element ▸ 3D Transformation** menu command. Each individual placed 3D file is edited in its own 3D set.

Furthermore, when a placed file is in 3D mode, it is possible to add more 3D files (but no 2D files) to it via the browser window. The additional placed files can be edited separately in 3D mode. Following projection into 2D mode, the files form a single placing unit but can still be selected on an individual basis (see previous section on the object window). When reverting back to 3D mode, they again form a single placing unit and are edited in one combined set. This changes if a file in the set is edited in 2D mode.

For example, if you move a file within the unit, the following note appears:

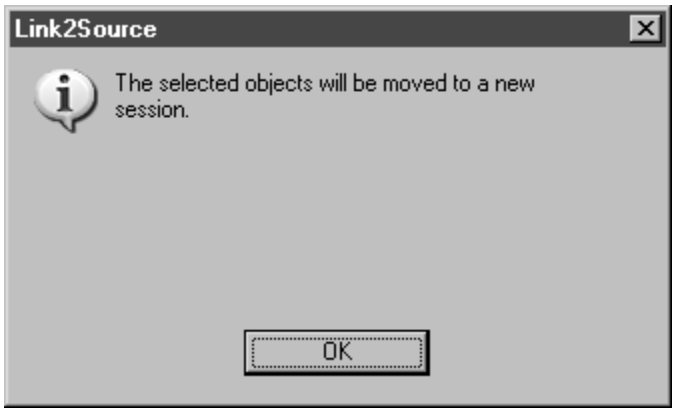

After clicking **OK** to confirm, this file is separated from the unit. The file can then be edited further in 3D mode and in its own set.

What Do You Need to Note for the Update Process?

If a link exists to the original file, Arbortext IsoDraw notes the name of the file and the path together with the storage location on the data medium. You therefore must not change the file name or save the file elsewhere on your data medium. The path must also remain unchanged. You must not add folders or change folder names. A new version of the 3D file must have the same name and replace the old file. If you follow these rules, Arbortext IsoDraw will always be able to locate the file. You should preferably always save the original file in the same folder as the Arbortext IsoDraw file, and you will then not need to concern yourself with the path.

If a placed file has been unintentionally saved in another folder, you can update the path in the **Placed File** dialog box under **File**.

Batch Process

Use the **Batch Process** command on the **File** menu to set up and run file printing or conversion tasks on a batch of files; i.e., all the files of one type, in one folder.

You can batch-print or batch-convert any type of file Arbortext IsoDraw supports. The list of available file types includes Arbortext IsoDraw ISO files (`*.iso`), packed ISO files (`*.isoz`), and several non-ISO 2D and 3D formats. You can also make non-ISO file types available to Arbortext IsoDraw by installing PTC ProductView Adapters on your system. (See the *Arbortext IsoDraw Data Exchange Reference* for more information on file formats supported through ProductView Adapters.)

About Batch-Printing and Batch-Conversion

Batch-printing opens or imports a batch of files and sends them to any printer you select. Batch-conversion opens or imports a batch of files, then saves or exports them to an output folder you select.

Batch-conversion can do any of the import/export operations below on a batch of files:

- Import: Open non-ISO files and save them as ISO files
- Export: Open ISO files and save them as non-ISO files
- Import and Export: Open non-ISO files and save them in a different non-ISO format

You can also modify each file in a batch between input and output (to a printer or file) by changing file settings such as scale factors and preferences, or by running a macro on each file. These two methods of modifying files during batch processing are described next.

Changing Settings for All Files in Batch

When you run a batch process, Arbortext IsoDraw applies settings, such as scale factors, import and export preferences, and/or print setup entries, to each file in the batch. You can change these settings in the **Preferences** and **Printer Setup** dialog boxes before you choose **File ▸ Batch Process**, or you can access these dialog boxes while you are setting up a batch process.

Any changes you make in the **Preferences** and **Printer Setup** dialog boxes while the Batch process wizard dialog box is open will remain intact after you close.

Modifying All Files in Batch

If you want to edit all files in a batch the same way, you can add an existing Arbortext IsoDraw macro to your batch process. When you run the batch, the macro will execute on each file in the batch before it is printed, saved, or exported.

Setting up and Running a Batch Process

Note

Save all open Arbortext IsoDraw files before you start setting up a batch process. When you run a batch process, all open Arbortext IsoDraw files in the current session are automatically closed.

To set up and run a batch process, choose **File ▸ Batch process**. The **Batch process wizard** dialog opens as shown:

Batch Process Wizard Dialog Box

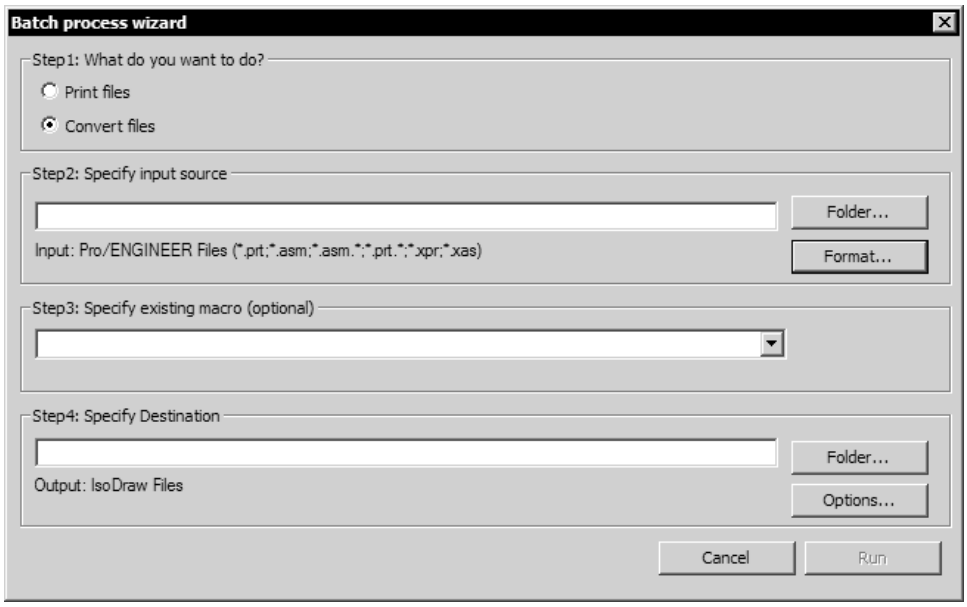

Complete the four setup steps in the **Batch process wizard** dialog box, then click **Run**. These steps are summarized below:

Batch Process Setup Steps – Summary

Step 1: What do you want to do?	Select the type of batch process you want to run; printing or conversion.
Step 2: Specify input source	Select the input batch folder and file format. (Optional) Change scaling and, for non-ISO input files, import

Batch Process Setup Steps – Summary (continued)

	preferences (if available).
Step 3: Specify existing macro (optional)	(Optional) Choose an existing macro to execute on each file in the batch.
Step 4: Specify destination	• For batch-printing, specify a printer. (Optional) change print settings. • For batch-conversion, specify an output folder and output file format. (Optional) Change scaling, and, for non-ISO output files, export preferences (if available).

The next four topics provide detailed instructions for completing each of these steps.

Batch Process Wizard Step 1 – Print or Convert?

Start by selecting the type of batch process you want to set up and run.

In the **Batch process wizard** dialog box, under **Step 1: What do you want to do?**, click one of the two options:

- **Print files** to send a batch of files to a printer.
- **Convert files** to import or export a batch of files, or to change a batch of files from one format to another.

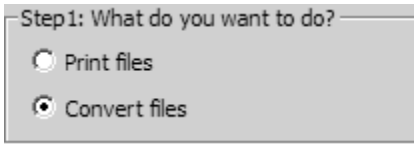

Note

You can also modify files with a macro during either batch-printing or batch-conversion. See *Batch Process Wizard Step 3 – Specify Macro (Optional) on page 71*.

Batch Process Setup Step 2 – Specify Input

Do the following to specify the source folder, input file format, and (optionally) any input file settings for the batch of files you want to process:

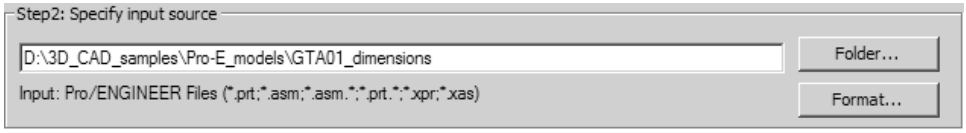

1. Under **Step 2: Specify input source**, click **Folder**. The **Browse for Folder** dialog box opens.
2. Browse to select the source folder then click **OK**. The folder path appears in the box below **Step 2: Specify input source**.
3. To specify the input file format and (optionally) change input file settings, such as scaling and import preferences, click **Format**. The **Options** dialog box opens.
4. In the **Options** dialog, do the following:
   a. Click a file type in the **Format** list to select the input file format.

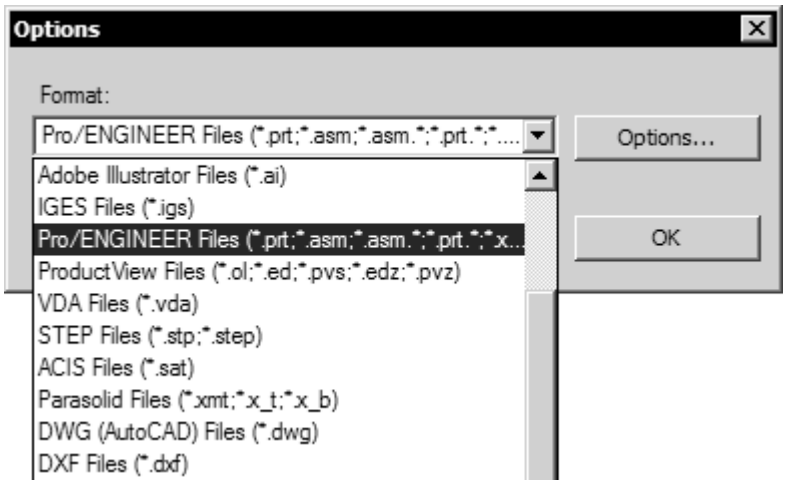

   b. (Optional) Click the **Scaling** button in the **Options** dialog box. Enter a value for **Scale in %** then click **OK**. Each file in the batch will be proportionally enlarged or reduced by the percentage you entered. If you do not want change the scaling of each input file, leave **Scale in %** at `100` (default).

   c. (Optional) If you selected a non-ISO format, click **Options** in the **Options** dialog box to change import preference settings for that format. If the **Options** button is unavailable, there are no import preference settings for the selected format. (See the *Arbortext IsoDraw Data Exchange Reference*

for recommended and optional import preference settings for non-ISO file types.)

Note

When you run a batch process on non-ISO input files, each file is imported into ISO format first—before any changes are applied—even if the output format is not ISO.

Batch Process Wizard Step 3 – Specify Macro (Optional)

You can execute an Arbortext IsoDraw macro on each input file during a batch run. A macro enables you to apply the same change(s) to each input file in a batch before they are printed or saved to an output file.

Note

For instructions on how to create macros in Arbortext IsoDraw, see *Macros on page 460* *in this guide and the* Arbortext IsoDraw Macro Language Reference.

If you want to add a macro to your batch process, select a macro name from the list under **Step 3: Specify existing macro (optional)** in the **Batch process wizard** dialog box.

The list shows the names of all macros that were recorded in the current Arbortext IsoDraw session. It also includes any macros in Arbortext IsoDraw macro files (`*.ism`) stored in the Macros folder, *`Arbortext-IsoDraw-install-path`*`\User Profiles\`*`username`*`\Application Data\PTC\IsoDraw\Macros`. (The folder *`username`* matches your current Windows logon ID.)

How a Macro Runs in a Batch Process

Macro commands run on each file between input and output. Non-ISO input files are imported to ISO before macro commands execute on them. Any scaling you specified in **Step 2: Specify input source** is applied before the macro commands.

After the macro executes, any changes it made are reflected in the printed output or the output file (even if the output file is exported to a non-ISO format).

Batch Process Wizard Step 4 – Specify Output (for Printing)

If you selected **Print files** under **Step 1: What do you want to do?** in the **Batch process wizard** dialog box, specify the output printer and printer settings for the batch as follows:

1. Under **Step 4: Specify Destination**, click **Options**. The **Print Setup** dialog box opens.
2. Under **Printer**, select the printer **Name**.

   If the name of the shared network printer you want to use is not on the list, click the **Network** button in the lower left corner to open the **Connect to Printer** dialog box. Under **Shared printers**, browse to select the printer you want to connect, then click **OK** to return to the **Print Setup** dialog box.
3. (Optional) Click **Properties** to open the ***Printer_Name* Document Properties** dialog box and change the selected printer's document properties; for example, **Layout**, **Paper/Quality**, and **Color**. Different printers have different properties and default property settings. Click **OK** to save your changes and close this dialog box.
4. (Optional) In the **Print Setup** dialog box, change printer settings under **Paper**, **Orientation**, **Print Overlap**, and **Scaling**.
   - The default **Size** and **Source** settings under **Paper** depend on the currently selected printer.
   - **Print overlap** lets you print oversize drawings on multiple adjacent sheets that you can assemble seamlessly.

     

     To enable **Print overlap**, type width values for **Horizontal**, **Vertical**, or both. (For more information on **Print overlap**, see Printer Setup on page 75.)
5. Click **OK** to save your settings and close the **Print Setup** dialog box.

   In the **Batch process wizard** dialog box, under **Step 4: Specify Destination**, the name of the selected printer appears above **Output: Printer**.
6. Click **Run** at the bottom of the **Batch process wizard** dialog box to send each file in the batch to the output printer.

Each batch-printed file reflects the following:

- Default or changed input file settings under **Step 2: Specify input source**, such as **Scale in %** and import preferences (for non-ISO input file types).
- Macro commands executed on the file (if you selected a macro in **Step 3: Specify existing macro (optional)**).

Batch Process Wizard Step 4 – Specify Output (for Converting)

If you selected **Convert files** under **Step 1: What do you want to do?** in the **Batch process wizard** dialog box, specify the destination folder, output file format, and (optionally) any output file settings for the batch as follows:

1. Under **Step 4: Specify Destination**, click **Folder**. The **Browse for Folder** dialog box opens.
2. Browse to select the output folder then click **OK**. In the **Batch process wizard** dialog box, the folder path appears in the box above **Output**.
3. To specify the output file format and (optionally) change output file settings, such as scaling and export preferences, click **Options**. The **Options** dialog box opens.
4. In the **Options** dialog, do the following:
   a. Click a file type in the **Format** list to select the output file format.

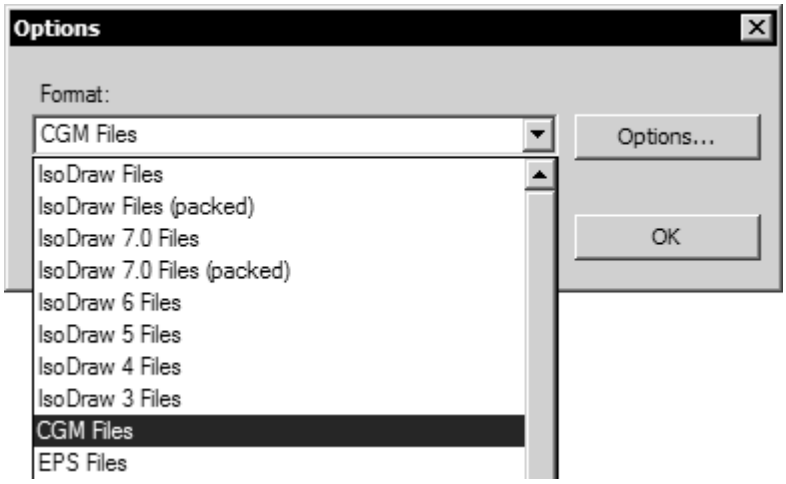

b. (Optional) Click the **Scaling** button in the **Options** dialog box. Enter a value for **Scale in %** then click **OK**. Each file in the batch will be proportionally enlarged or reduced by the percentage you entered. If you do not want change the scaling of each output file, leave **Scale in %** at `100` (default).

c. (Optional) If you selected a non-ISO format, click **Options** in the **Options** dialog box to change export preference settings for that format. If the **Options** button is unavailable, there are no export preference settings for the selected format. (See the *Arbortext IsoDraw Data Exchange Reference* for recommended and optional export preference settings for non-ISO file types.)

Note

If you select a non-ISO output format, any changes you make to output file settings, such as scaling and export preferences, are applied before the file is saved in the non-ISO output format; i.e., while the file is still in ISO format. (Recall from *Batch Process Setup Step 2 – Specify Input on page 69* *that, when you run a batch process on non-ISO input files, each file is imported into ISO format first.)*

5. Click **Run** at the bottom of the **Batch process wizard** dialog box to convert each file in the batch and save it in the output folder.

   Each converted output file in the output folder reflects the following:

   - Default or changed input file settings under **Step 2: Specify input source**, such as **Scale in %** and import preferences (for non-ISO input file types).
   - Macro commands executed on the file (if you selected a macro in **Step 3: Specify existing macro (optional)**).
   - Default or changed output file settings for **Step 4: Specify input source**, such as **Scale in %** and export preferences (for non-ISO input file types).

Printer Setup

The **Printer Setup** command allows you to enter settings to control how your Arbortext IsoDraw documents are printed out. The setting options of the dialog boxes depend on which printer is connected.

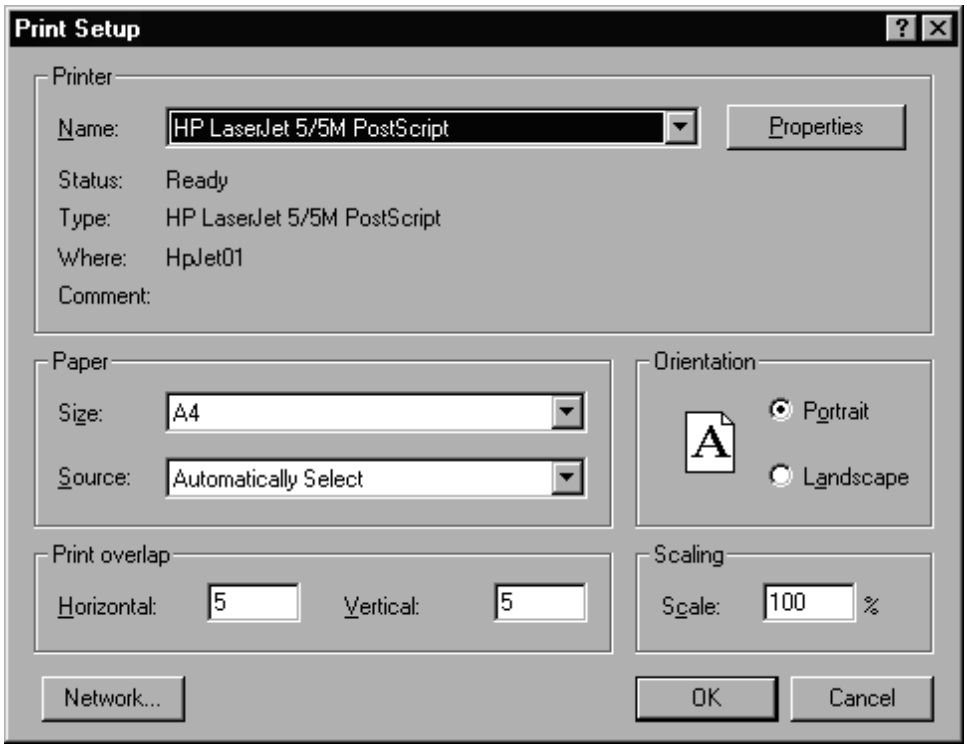

In addition to the setting options you are already familiar with, Arbortext IsoDraw now features two additional input fields for specifying the **print overlap**.

Your drawings will often be larger than the paper or film format which the connected printer can handle. Even if the formats do agree in size in theory, it may be the case that, due to the physical attributes of the printer you are using, the **printable area** of the sheet is smaller than the actual paper format. In such case, there will be a margin along the edge of the sheet which cannot be printed on.

With a LaserWriter, for example, the values for an A4 sheet (width x height) are as follows:

Paper size:	210.0 mm x 297.0 mm
Printable area:	189.8 mm x 275.5 mm

There are two ways you can print out the complete drawing:

1. By entering an appropriate reduction factor in the dialog box shown above (e.g. 70% for reduction from A3 to A4).
2. By printing out in 1:1 scale (100%) and thus spreading your drawing over several sheets.

In the latter instance, you can assemble the individual sheets into a complete drawing (e.g. on a base film). The assembly work is made easier if the individual sheets are printed out with overlaps.

When printing out with overlaps, only the printable area is taken into account. A horizontal overlap of 5 mm thus means that the printable areas of two adjacent pages overlap by 5 mm.

You can also enter different values for the horizontal and vertical overlaps.

Note

You can use the ***Window ▸ Show printing pages*** *command to display how the drawing is split into individual printing pages. The dividing rules mark the exact center of the specified overlap.*

You can set values for the print overlap if no document window is open. The settings then apply for all newly created documents.

Print

The **Print** command allows you to output the active document on the connected printer.

A dialog box appears when this command is selected. Its appearance will depend on which printer is connected. The dialog box for an HP printer currently looks as follows.

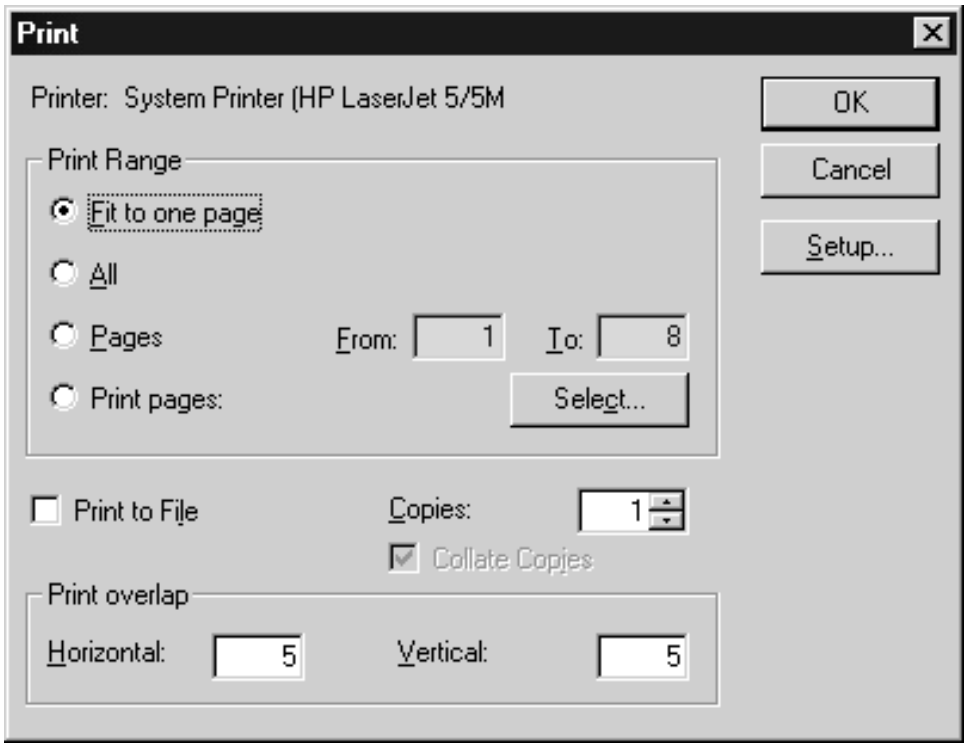

Arbortext IsoDraw adds further two options to the usual print settings which allow you to select the pages you want to print:

Fit to One Page

This is the default setting and reduces the illustration so that it fits on a single page.

Print Pages

If this option is enabled, you can specify the pages you want to print.

If you click **Select** a further dialog box will appear for selecting the pages to be printed out.

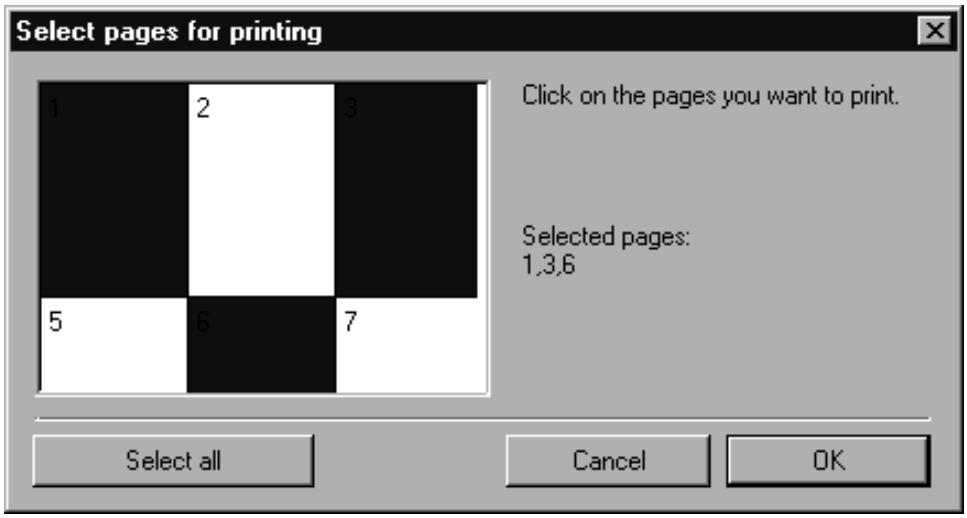

This display shows you the number of pages you will require in order to print out your document in its entirety. The total area will be the same as the drawing size you created (refer to Drawing on page 113 in the Preferences section). The split into individual printing pages depends on the paper format of the printer and the **print overlap** setting (see Printer Setup on page 75).

You can make your selections in any order by clicking the relevant pages. **Select all** selects all pages containing drawing elements.

Confirm your selection with **OK**. The pages you select will appear in the print dialog box.

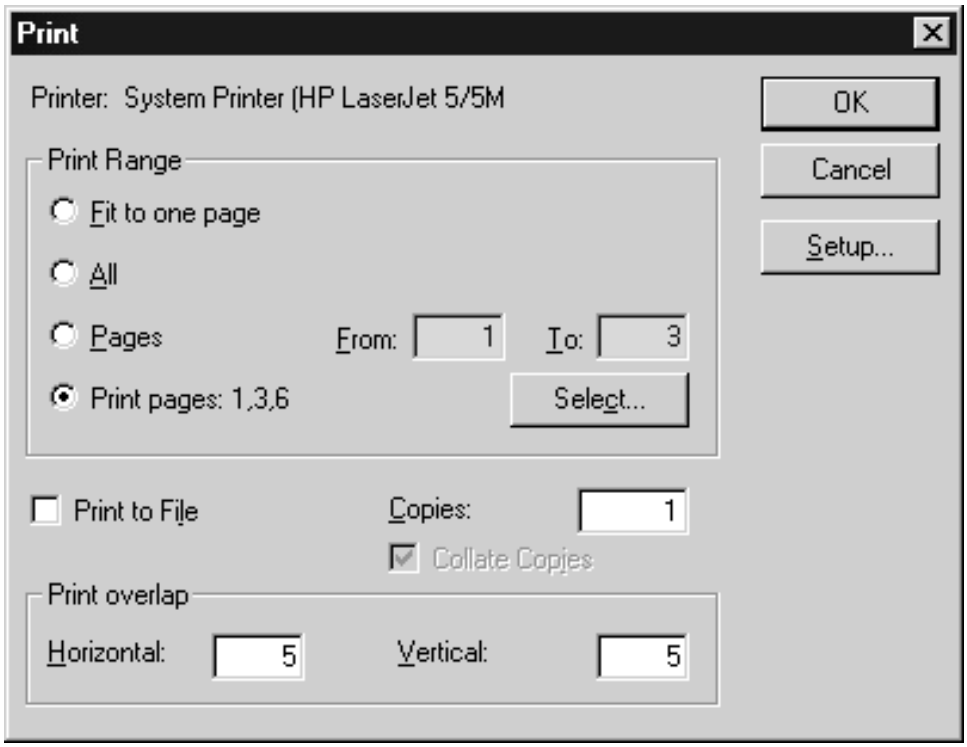

Note

The division of the drawing into individual printing pages or the assignment of the individual drawing elements to the various printing pages can be displayed by means of the ***Window ▸ Show printing pages*** *command.*

Only elements of layers marked as printable in the layer window will be printed.

Quit

The **File ▸ Quit** menu command allows you to exit the program. All opened documents are closed automatically. If you have not saved your changes, the program will request you to do so.

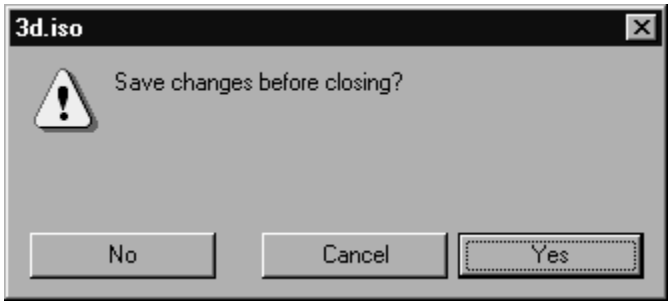

If you click **Yes** the **Save** command will be executed, if you click **No**, all windows will be closed without the contents being saved. You can change your mind to leave the program by clicking **Cancel**.

Start IsoCompose

This command only appears when Arbortext IsoCompose– a product which is available separately – is installed.

It is used to start the Arbortext IsoCompose program for creating electronic parts catalogs. Instructions on how to use Arbortext IsoCompose and information on installing the program are found in the Arbortext IsoCompose documentation.

If the program is not installed or not installed correctly, the following warning appears when Arbortext IsoDraw is started.

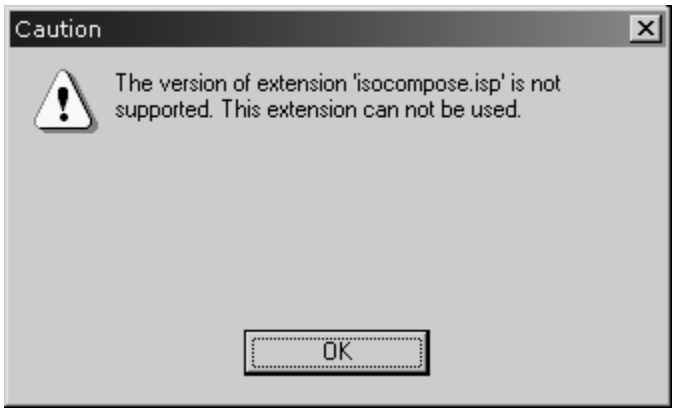

If this warning appears, selecting the command has no effect.

2
Edit Menu

Most commands in the **Edit** menu can be selected by keyboard commands. If there is a key combination command code, it is indicated next to the command text.

The figure shows which commands in the **Edit** menu can be selected using a command code.

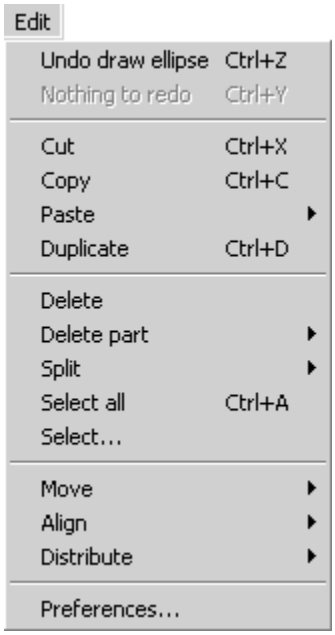

Undo

The **Undo** command on the **Edit** menu enables you to undo the last operating step.

Depending on the type of operation you performed last, the menu will display different commands, e.g. **Undo draw rectangle** or **Undo move**. If there is nothing to undo, the command is **Nothing to undo** and cannot be selected.

Arbortext IsoDraw can save several operations. Consequently, you can also undo several actions in the reverse order by selecting the command the appropriate number of times. The maximum number of steps you can undo can be set in the **misc** dialog page under **Preferences**.

You can execute undone actions again by means of menu command **Redo**.

Keyboard command: F1

Note

Various actions cannot be undone.

Undoing in 3D Mode

This tool allows you to undo recently executed operations, exactly as in 2D mode. When working in the 3D mode of Arbortext IsoDraw this affects essentially the 3D tools, all the transformation commands and various menu commands.

Redo

The **Redo** command on the **Edit** menu allows you to redo the last operation you undid.

Depending on the type of operation you last undid, the menu will display different commands, e.g. **Redo draw rectangle** or **Redo move**. If there is nothing to redo, the command is **Nothing to redo** and cannot be selected.

If you need to redo several successive operations, you can restore these by calling up the command repeatedly in the reverse sequence of steps.

Cut

The **Edit** ▸ **Cut** menu removes selected elements. The elements are deleted and saved in the program's clipboard. The cut elements replace the former contents of the clipboard.

These elements can be retrieved from the clipboard at any time by means of the **Paste** command on the **Edit** menu, provided that the contents of the clipboard have not been overwritten by subsequent operations (such as other elements being cut or copied).

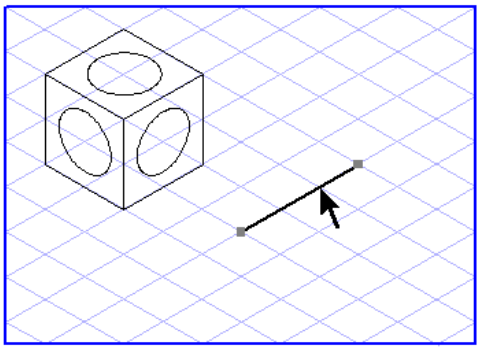

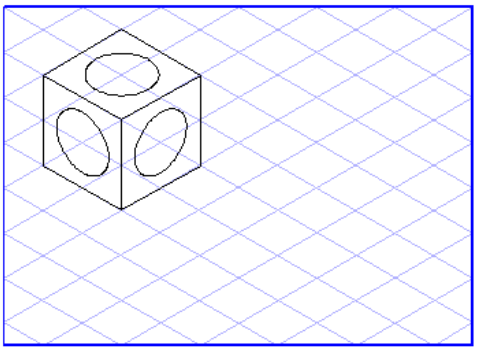

If you are editing text elements, use this command to cut out the selected text. You can then reinsert it at any text position using the **Edit ▸ Paste** menu.

If you are editing image elements, use this command to cut out the selected pixels. You can then reinsert the pixels at any point using the **Edit ▸ Paste** menu. Image editing must be activated for pasting operations.

Keyboard command: F2

Note

Arbortext IsoDraw has its own clipboard. This means that elements cannot be copied into other programs via the Windows clipboard.

Unlike with entire elements, cut-out texts and bitmaps are placed in the Windows clipboard and can thus be exchanged between programs. The contents of the Arbortext IsoDraw clipboard remain unchanged.

Copy

Applies to Arbortext IsoDraw CADprocess only.

The **Edit ▸ Copy** menu allows you to copy selected elements in the program's clipboard. These elements replace the previous contents of the clipboard.

You can use the **Edit ▸ Paste** menu to insert these elements into the drawing from the clipboard if the contents of the clipboard have not been overwritten by subsequent operations (copying or cutting of other elements).

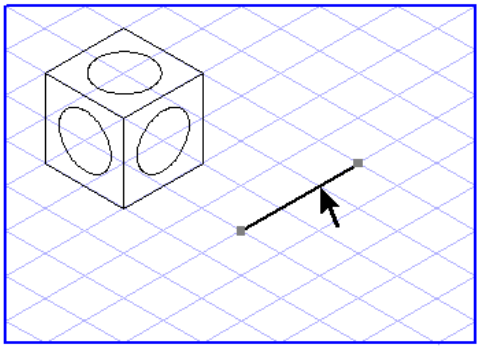

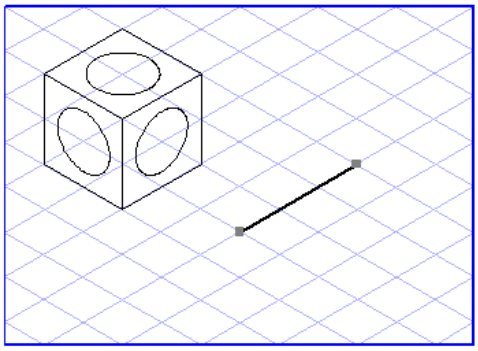

If you are editing text elements, use this command to copy the selected text. You can then reinsert the text at any text position using the **Edit ▸ Paste** menu.

If you are editing image elements, use this command to copy the selected pixels. You can then reinsert the pixels at any point using the **Edit ▸ Paste** menu. Image editing must be activated for pasting operations.

Keyboard command: F3

Note

Arbortext IsoDraw has its own clipboard. This means that elements cannot be copied into other programs via the Windows clipboard.

Unlike with entire elements, cut-out texts and parts of image elements are placed in the Windows clipboard and can thus be exchanged between programs. The contents of the Arbortext IsoDraw clipboard remain unchanged.

Copying in 3D Mode with Arbortext IsoDraw CADprocess

The copy command works in exactly the same way in 3D mode as it does in the 2D mode of Arbortext IsoDraw.

All selected objects, groups, and elements are copied. The following description shows how you can use the copy command in 3D mode.

You have imported an assembly unit with numerous assemblies in order to create a spare parts catalog. Parallel to this, you want to use certain assemblies for e.g. operating instructions.

Take this Example

Open a new document and save the file under a new name.

Select the assemblies you wish to continue using. Do this either in the drawing or in the object window using the arrow cursor, then choose **Edit ▸ Copy**.

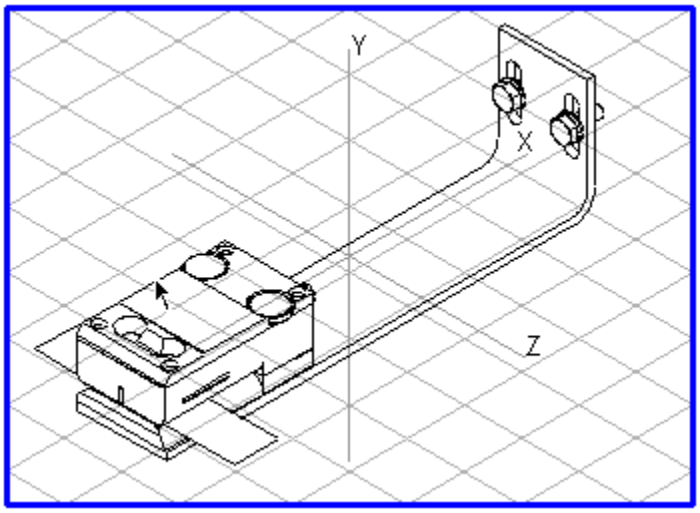

Now change to the new document. Choose **Edit ▸ Paste**. You will see that the 3D mode window changes, All information including the object information for the copied assemblies remains available. Click the **Centering** tool. All assemblies can now be seen clearly on the coordinate system. You can now use all the tools and menu commands to edit the assemblies before you convert them to a 2D illustration.

The figure on the left depicts the copied assemblies that have been pasted into the new Arbortext IsoDraw CADprocess document. The figure on the right shows the assemblies in a different projection.

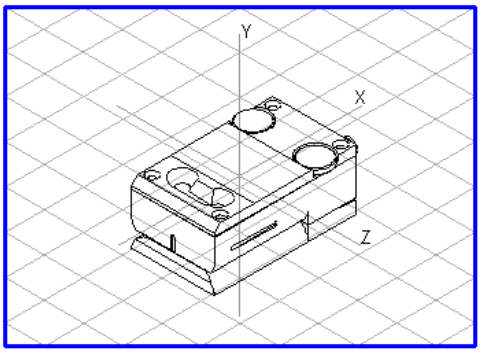

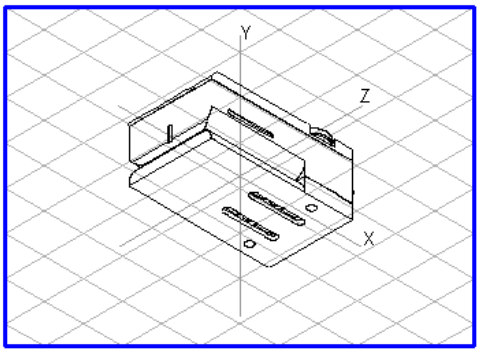

Copying in 3D Mode

Applies to Arbortext IsoDraw Foundation only.

The copy command works in exactly the same way in 3D mode as it does in the 2D mode of Arbortext IsoDraw.

The loaded drawing is copied.

You can then paste the copied drawing into the current file or into another open file. If you copy into another file, the item being copied appears in 3D mode. The center of the item is positioned over the origin of the coordinates.

Paste

You can only choose the **Paste** command on the **Edit** menu if you have previously cut out or copied elements, text sections, or pixels. The cut elements (text sections or pixels) are saved in the clipboard and can be pasted into the drawing as often as necessary by means of this menu command. You can select from three pasting options in the submenu.

Pasting in 2D Mode

After choosing **Edit ▸ Paste**, the elements are pasted into the middle of the screen window. Even after you have activated another Arbortext IsoDraw file, the elements are still pasted into the center of the window for the new file.

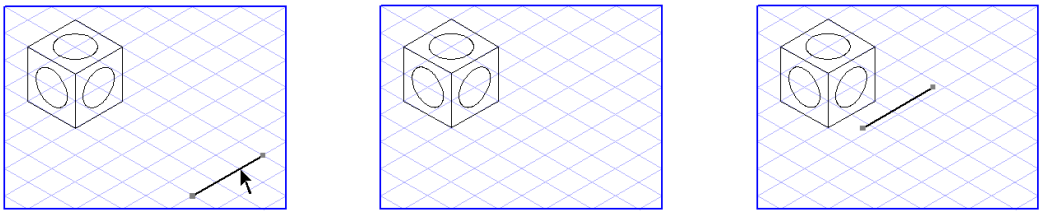

Maintain Position

After selecting **Paste ▸ at same position**, the elements are inserted at the precise position where they were cut or copied, even if you have changed the screen section in the meantime. Even after you have activated another Arbortext IsoDraw file, the elements are still pasted at the precise position where they were cut or copied in the original document.

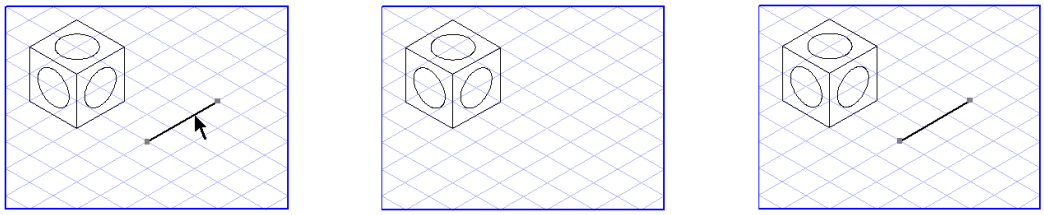

Paste with Options

After selecting **Paste ▸ with options**, the following dialog box appears.

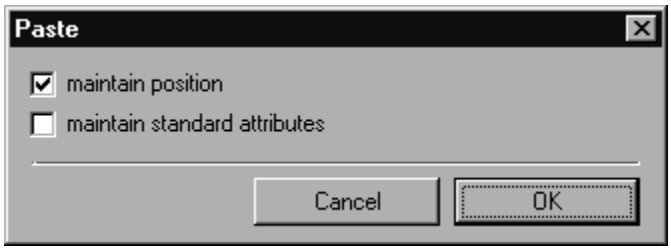

When you check the first box by clicking it with the mouse, the elements will be pasted to the precise position they were cut or copied from, as with the command **Paste ▸ at same position**.

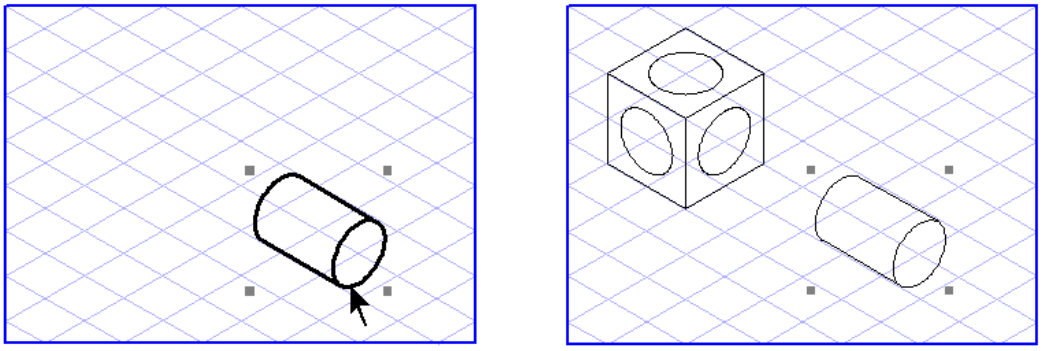

If you check the second box, the standard attributes of the elements (pens, styles, halos, colors) in the original document will be retained when pasting. Standard attributes which have been adopted through pasting are entered into the relevant attribute list preceded by an asterisk.

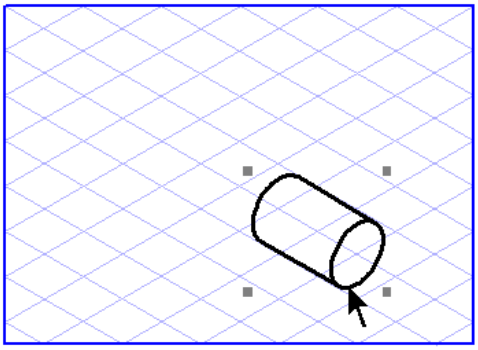

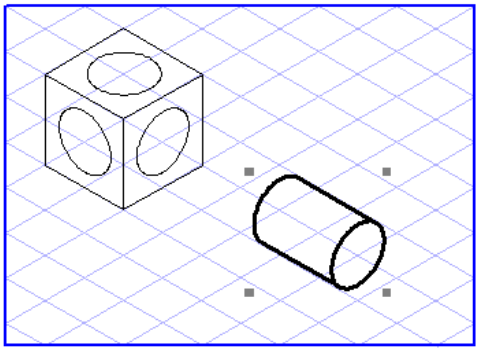

Elements are always pasted in the layer which is currently active.

If you are editing text elements, the text from the clipboard is pasted at the insertion cursor. When you paste the text it adopts the characteristics of the existing text.

If you are editing image elements, you will paste the pixels from the clipboard into the image element.

Keyboard command:	Pasting	F4
Keyboard command:	Maintain position	SHIFT+F4

Note

Arbortext IsoDrawhas its own clipboard. Consequently, elements placed in the Windows clipboard by other programs cannot be pasted into an Arbortext IsoDraw drawing.

Unlike with entire elements, the Windows clipboard is used when editing text elements or bitmaps. Text elements or bitmaps you have copied or cut from other programs can thus be pasted into your illustration. The contents of the Arbortext IsoDraw clipboard remain unchanged.

Pasting in 3D Mode

The paste command works in exactly the same way in 3D mode as it does in the 2D mode.

The **Paste ▸ with options** command cannot be selected in 3D mode.

All copied objects, groups, and elements are pasted into the same or a different file.

You can read how the **Copy** and **Paste** commands are used in 3D mode in Copy on page 84.

Duplicate

This command duplicates selected elements.

The **Duplicate** command on the **Edit** menu is a combination of the commands **Copy** and **Paste ▸ at same position** with one exception: the selected elements are not saved to the clipboard. Consequently, they cannot be pasted into a drawing later using the **Paste** command.

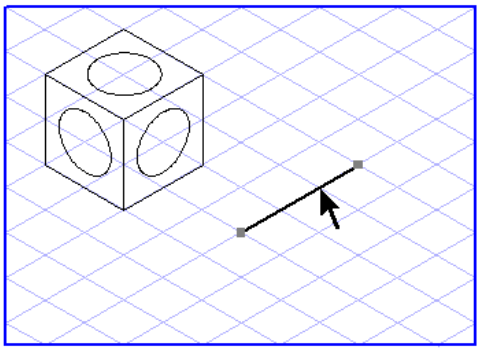

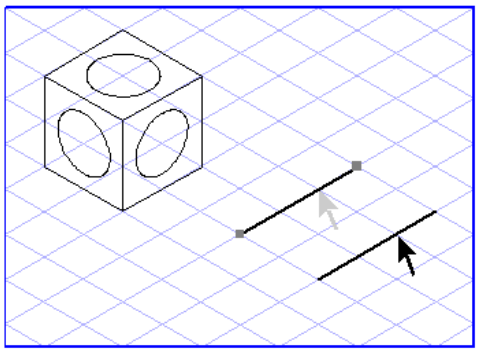

This nevertheless has the advantage that the old contents of the clipboard are retained. The new elements are created on the active layer and lie at exactly the same position as the original elements.

If you are editing image elements, you can use this command to duplicate the selected pixels.

Duplicating in 3D Mode

The **Duplicate** command works in exactly the same way in 3D mode as it does in the 2D mode of Arbortext IsoDraw.

The loaded drawing is duplicated. The duplicated drawing is positioned directly over the selected item.

3D Mode Example

Applies to Arbortext IsoDraw CADprocess only.

All selected objects, groups, and elements are duplicated. The following description shows how you can use the duplicate command in 3D mode.

For an assembly unit consisting of numerous assemblies, you have selected a projection that enables most components to be identified with ease. However, you are unable to see either all or part of a number of important assembles when displaying these without hidden lines. To show these components, they would need to be viewed from a different direction.

The contour of the assembly (in this case, the front contour of the guide piece at the top of the lever) cannot be identified easily in the projection. However, the illustration needs to be able to show this contour in order to describe how the unit works.

Select the assemblies (in this case, the lever with add-on parts) using the arrow cursor in the drawing or in the object window, then choose **Edit ▸ Duplicate**. The duplicated assemblies remain selected.

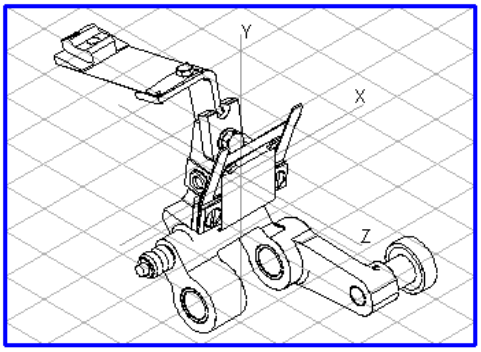

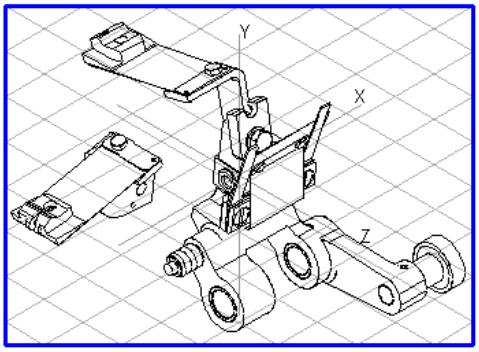

They must now be moved into an empty part of the drawing. Choose **Edit ▸ Move** and select the direction of movement. Once the command has been completed, the components are located next to the original drawing. Click the **Rotation** tool in the toolbox. Select the axis in order to rotate the components in the required direction (in this case, the `Y` axis). Enter the rotation angle in the dialog box (in this case, `90`). After you have confirmed your entry, the components will be displayed so that the contours (in this case, the contour of the guide piece) are clearly visible.

You can use the **Duplicate** function and the tools in 3D mode to generate as many additional views you require.

Delete

The **Edit ▸ Delete** menu can be used to delete selected elements.

When editing text elements, this command allows you to delete the selected text section. If you are editing image elements, it deletes the selected pixels.

Unlike the **Edit ▸ Cut** menu, the deleted objects are not included in the clipboard. As a result, they cannot be pasted back into an Arbortext IsoDraw drawing at a later time with the **Edit ▸ Paste** menu.

Keyboard command: LEFT ARROW

Delete Part

The **Edit ▸ Delete part** menu can be used to delete parts of an element.

Note

*This command cannot be used with threads unless they have been edited first using the **Convert** command on the **Element** menu.*

Select the element you want to partially delete. Then click with the arrow cursor on the part of the element to be deleted. Now choose between two alternatives from the submenu: **Auto** results in the immediate automatic deletion of a part, while **Select points** allows you to influence the definition of the part to be deleted.

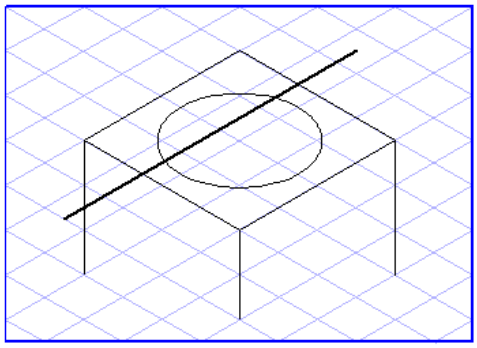

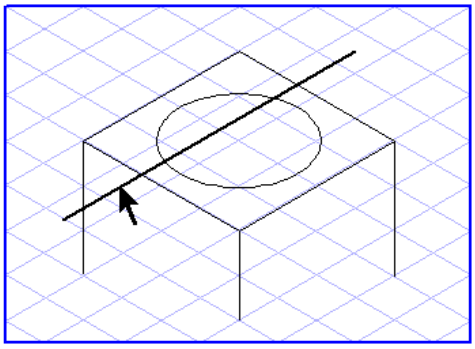

Delete part with Auto

After selecting **Auto**, Arbortext IsoDraw automatically deletes a part of the selected element provided that the element has common intersection points with other elements. The part you click on will be deleted up to the two nearest intersection points.

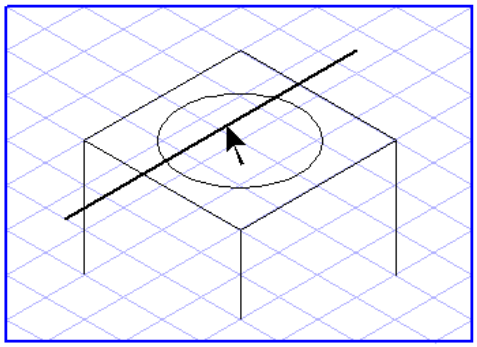

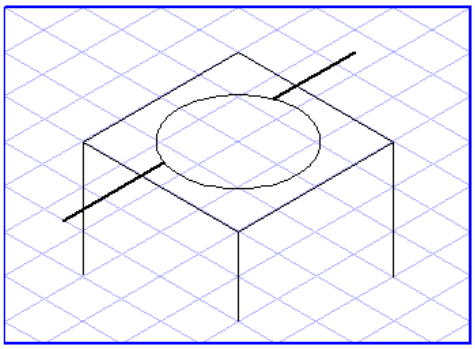

Delete part with Select points

If you choose **Select points**, the **arrow** cursor changes to a delete cursor and you will see a number of points marked in various ways.

These consist in part of deletion points which you can subsequently select from. The deletion points include all intersection points where the element intersects with other elements and the element points themselves. The point where you clicked the element is also still selected. This is the selection point.

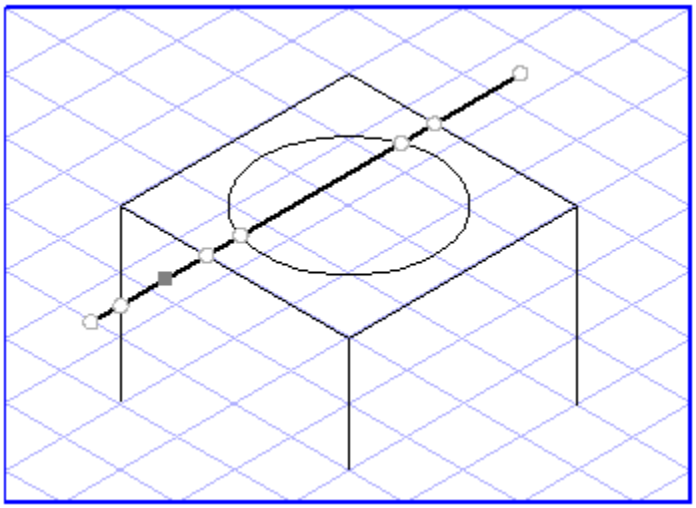

The selection point is always located on the part of the element to be deleted.

Now click two deletion points in succession in order to delete parts of an element.

You have two options: By selecting two deletion points you can select either the part of the element to be deleted or the part which is not to be deleted. The question of whether the part between the selected points is to be deleted or retained depends on whether the selection point lies between these two points or outside them.

The deletion points selected in the figure enclose the selection point. This part will therefore be deleted.

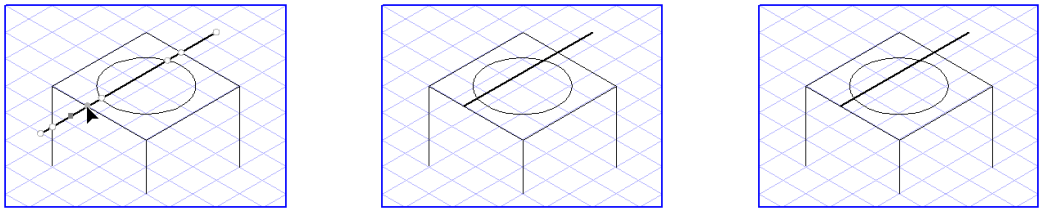

Here, the selection point lies outside the line defined by the deletion points. The segment between the deletion points is retained.

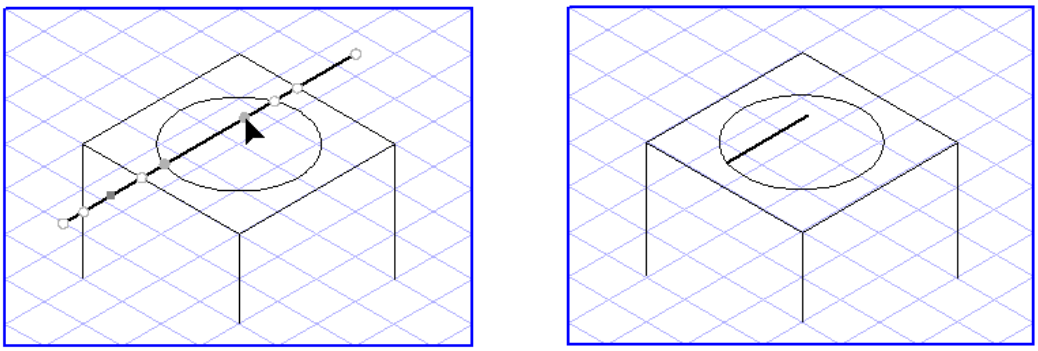

Note

You can cancel the deletion procedure provided you have not yet selected the second deletion point required to perform the deletion. Simply click the arrow cursor in the toolbox.

You can select free deletion points, i.e. points other than the marked element points and intersection points, by clicking the element while holding down the SHIFT key.

Note

In order to execute the ***Delete part*** *command, the element has to be selected and a selection point is required. If, for example, you have pasted an element from the clipboard, the element will be selected, but it will nevertheless be impossible to execute the command since the selection point which the program needs in order to delete the part has not yet been specified. In this event, you will need to click the element again with the arrow cursor to specify the selection point.*

Split

You can use the **Split ▸ Edit** menu to split elements. You can choose from two options in the submenu: Split one element with the aid of another or split a line into equal parts.

Split by Element

Edit ▸ Split ▸ by element is used to split an element by means of another element. Select the elements you want to split. After selecting the command the cursor turns into a **Split** cursor . Now click the element which is to function as the splitting mask. The selected elements are split at the intersection line determined by the splitting mask.

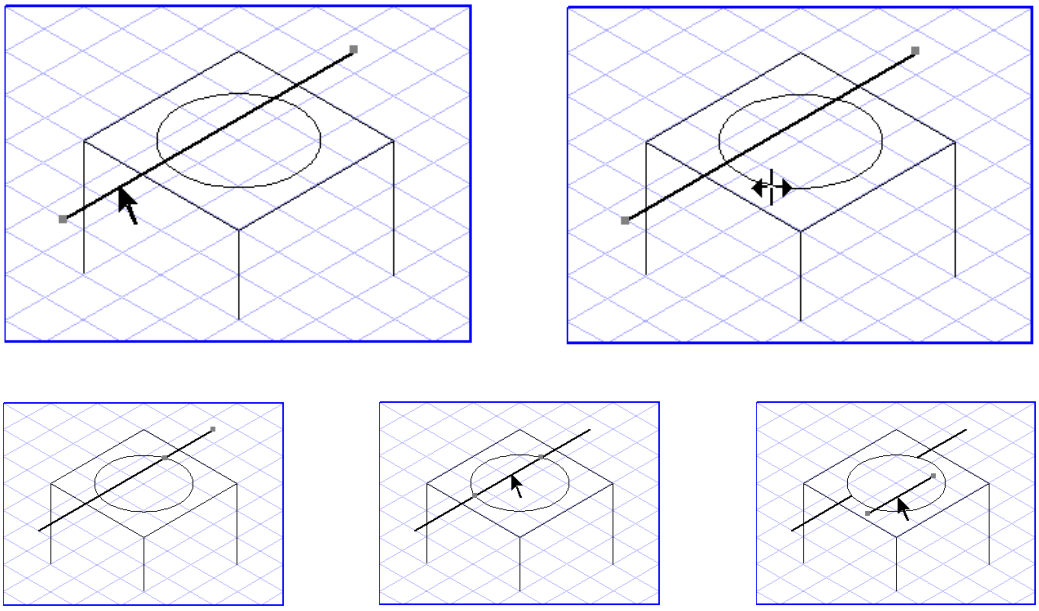

Note

Texts, placed graphics and image elements cannot be split. Threads can only be split if you have converted them first to individual elements with the ***Convert*** *command on the* ***Element*** *menu.*

Split into Parts

The **Edit ▸ Split ▸ into parts** command can be used to divide lines into segments of equal length. Select one or more lines and call up the command. The following dialog box appears. You can use this to specify how many parts the selected line elements are to be split into.

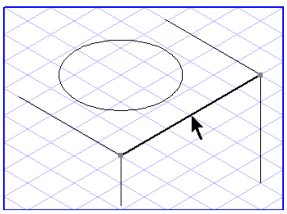

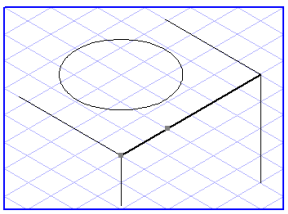

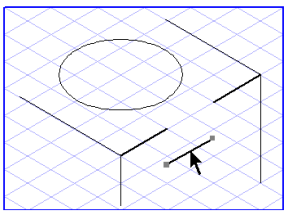

Select All

The **Edit ▸ Select all** menu activates all the elements and groups in your drawing.

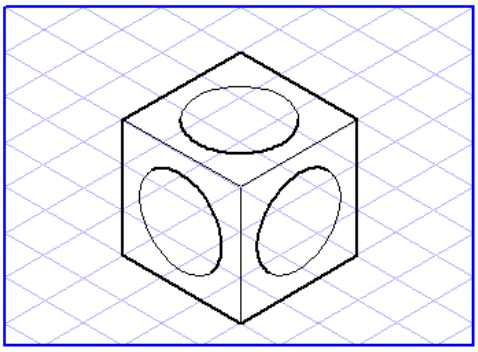

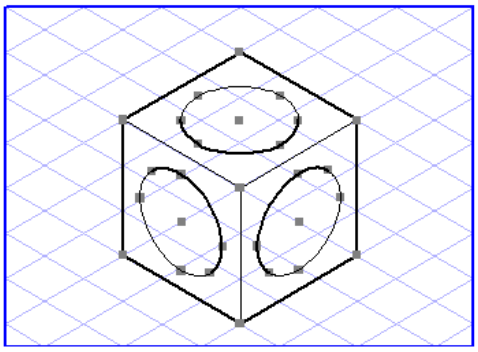

Elements located on locked layers and elements which have been individually locked with the **Lock** command on the **Element** menu are not activated.

If you are editing text elements, the command will select the entire text in the active text element.

When editing an image element, use this command to select the entire contents of the image, i.e. all pixels in the element.

Select

You can use the **Select** command on the **Edit** menu to select items in the drawing, such as elements, objects, and groups, that satisfy an **if** statement you define in the **Select elements** dialog box.

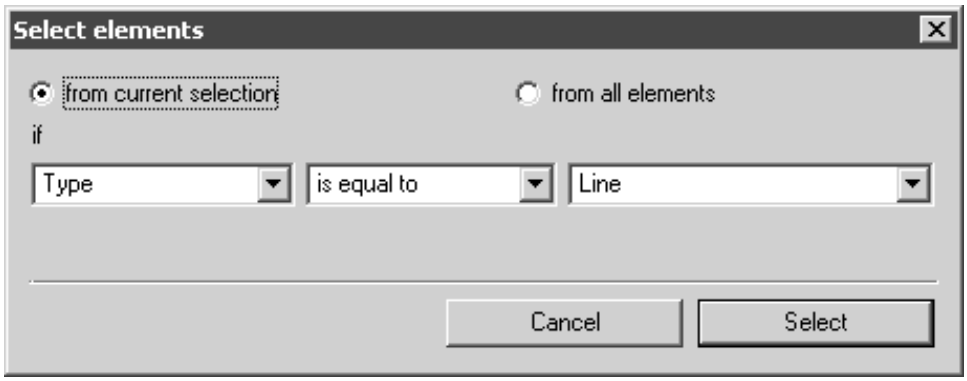

To Select in the Select Elements Dialog Box

1. On the menu bar, click **Edit**, and then **Select**.
2. In the **Select elements** dialog box, click **from current selection** or **from all elements** to define the search scope.

from current selection	Searches for matches within the current selection of elements and objects.
from all elements	Searches all elements and objects, whether they are currently selected or not.

3. In the boxes under **if**, define the search terms:
   a. In the left box, click the item to search for, such as the attribute, **Pattern**.
   b. In the middle box, click a condition, such as **is equal to**.
   c. In the right box, click a description of the item to search for, such as **Grey 15%**. If the box has no list, type a description in the box.
4. (Optional) In the left (item) box:

If you click the item…	Then…
Object attribute value	The **Object attribute value** dialog box opens. Type the attribute name in the box and then click **OK**.
Object (**ID** | **name** | **tip** | **attribute** | **attribute value**), **Text**, or **Callout**	Select the **Case sensitive** check box to search for an exact match to the text you typed in the right (description)

If you click the item…	Then…
	box. Clear **Case sensitive** if you do not want to distinguish between upper and lower case letters in the search.
Element or **Group**	Select the **completely** check box if you only want to select elements or groups that are completely inside or outside of the drawing sheet (**page**). Clear the **completely** check box if the selection can include elements and groups that are on the drawing sheet border; i.e., partially inside and outside the drawing sheet.

5. Click **Select** to perform the search and select all items that satisfy the **if** statement. The selection results appear in the drawing. (To close the **Select elements** dialog box without making a new selection, click **Cancel** before you click **Select**.)
6. To change the selection, change one or more search terms in the boxes under **if**, and then click the **Select** button again. (The **Select elements** dialog box remains open after you click **Select**.)
7. When you are satisfied with the selection, click **Close** ☒ or **Cancel** to close the **Select elements** dialog box. The selected items remain selected after you close the dialog box.

Search Options in the Select Elements Dialog Box

All the items, conditions, and descriptions you can use to build a search **if** statement in the **Select elements** dialog box are summarized below. You select the item in the left box, the condition in the middle box, and the description in the right box. If the description is a user-defined value, such as a name, ID, or length, you will have to type the value in the box.

Item	Condition	Description
Type	**is equal to** | **is not equal to**	Element types, markers, placed file, image element, callout
Pen	**is equal to** | **is not equal to**	List of the standard pens and the pens additionally defined for the current file in the **Pens** attribute window
Linestyle	**is equal to** | **is not equal to**	List of the standard linestyles and the linestyles additionally defined for the current file in the

Item	Condition	Description
		Styles attribute window
Halo	**is equal to** | **is not equal to**	List of the standard halos and the halos additionally defined for the current file in the **Halos** attribute window
Color	**is equal to** | **is not equal to**	List of all named colors for the current file from the **Fill** window, the colors **White** and **Black**, and **no fill**
Hatching	**is equal to** | **is not equal to**	List of hatchings from the **Fills** window of the current file
Pattern	**is equal to** | **is not equal to**	List of patterns from the **Fills** window of the current file
Object info	**exists** | **exists not**	None. (Object info exists if information was assigned in the **Object info** dialog box.)
Object ID	**is equal to** | **is not equal to** | **contains**	Text entry matching the **ID** field in the **Object info** dialog box.
Object name	**is equal to** | **is not equal to** | **contains** | **exists** | **exists not**	Text entry matching the **Name** field in the **Object info** dialog box.
Object tip	**is equal to** | **is not equal to** | **contains** | **exists** | **exists not**	Text entry matching the **Object tip** field in the **Object info** dialog box.
Object attribute	**is equal to** | **is not equal to** | **contains** | **exists** | **exists not**	Text entry matching an object attribute in the currently selected DTD. (See Select DTD on page 294.)
Object attribute value	**is equal to** | **is not equal to** | **contains** | **exists** | **exists not**	Text entry matching the value of an object attribute in the currently selected DTD. (See Select DTD on page 294.)
Text	**is equal to** | **is not equal to** | **contains**	Text entry matching the content of a text element.
Font	**is equal to** | **is not equal to** | **contains**	List of fonts installed on the operating system
Font Size	**is equal to** | **is not equal to** | **contains**	List of all values for font sizes as for the **Size** command on the **Text** menu. By selecting **other**, customized entry of the value in the subsequent

Item	Condition	Description
		dialog box.
Leading	**is equal to** | **is not equal to** | **contains**	List of all leading values as for the **Leading** command on the **Text** menu. By selecting **other**, customized entry of the value in the subsequent dialog box.
Kerning	**is equal to** | **is not equal to** | **contains**	List of all kerning values as for the **Kerning** command on the **Text** menu. By selecting **other**, customized entry of the value in the subsequent dialog box.
Superscript/ Subscript	**is equal to** | **is not equal to** | **contains**	List of all values for the superscript/subscript distances as for the **Superscript/Subscript** command on the **Text** menu. By selecting **other**, customized entry of the value in the subsequent dialog box.
Face	**is equal to** | **is not equal to** | **contains**	Selection from the four font face variants as for the **Face** command on the **Text** menu.
Text alignment	**is equal to** | **is not equal to**	List of text alignment options (see also Alignment on page 315).
Callout	**is equal to** | **is not equal to** | **contains**	Text entry matching the callout **Starting number**, **Prefix** or, **Postfix** as entered in the **Edit callout style** dialog box.
Element	**is outside** | **is inside**	Drawing sheet (**page**) border. ***Note*** *In 3D mode,* ***Element*** *selects 3D surfaces.* (**is outside** | **is inside**) with **completely** selected — Only selects elements that are completely (inside | outside) of the drawing sheet (**page**) border. (**is outside** | **is inside**) with **completely** cleared — Selects elements that are either completely or partially (inside | outside) the drawing sheet (**page**) border.

<table>
<tr><th>Item</th><th>Condition</th><th>Description</th></tr>
<tr><td>Group</td><td>is outside | is inside</td><td>Drawing sheet (page) border.

Note
Group cannot select nested groups. It only selects the outermost, or top, group.
<table>
<tr><td>(is outside | is inside) with completely selected</td><td>Only selects groups that are completely (inside | outside) of the drawing sheet (page) border.</td></tr>
<tr><td>(is outside | is inside) with completely cleared</td><td>Selects groups that are either completely or partially (inside | outside) the drawing sheet (page) border.</td></tr>
</table></td></tr>
<tr><td>Bounding box</td><td>is smaller than | is equal to | is larger than</td><td>Bounding box edge length in mm, in, or pt. (Units are set in the preferences panel for Drawing on page 113.)
<table>
<tr><td>is smaller than</td><td>Selects a bounding box if its longest edge is less than the length entered.</td></tr>
<tr><td>is equal to</td><td>Selects a bounding box if all its edges are of equal length and also equal to the length entered.</td></tr>
<tr><td>is larger than</td><td>Selects a bounding box if its shortest edge is greater than the length entered.</td></tr>
</table></td></tr>
<tr><td>Layer</td><td>is equal to | is not equal to</td><td>Name of the layer that contains the elements or objects to select; for example, (Standard layer | Background | Layer 1 … | … Layer n).

Note
Layer selection only works in 2D mode.</td></tr>
</table>

To Refine the Current Selection

If there is a current selection, you can do a series of selections in the **Select elements** dialog box to refine it (i.e., select a subset of items in it).

1. In the **Select elements** dialog box, click **from current selection**.
2. Select search terms that will make the **if** statement true for at least one item in the current selection.
3. Click **Select** to select a subset of items in the current selection. If the **if** statement was true for all items in the current selection, the current selection will not change.

   Tip

   *When refining the current selection, make sure at least one item in the current selection satisfies the **if** statement before you click **Select**. Otherwise, when you click **Select**, no items will be selected.*

Example

Suppose your drawing contains ellipse and Bézier path elements with various **Pen** attribute settings. If you want to select all ellipse elements that have their **Pen** attribute set to **Medium**:

1. In the **Select elements** dialog box, click **from all elements**.
2. In the boxes under **if**, click **Pen**, **is equal to**, and **Medium**, and then click **Select**. This creates a current selection of all elements in the drawing that have their **Pen** attribute set to **Medium**.

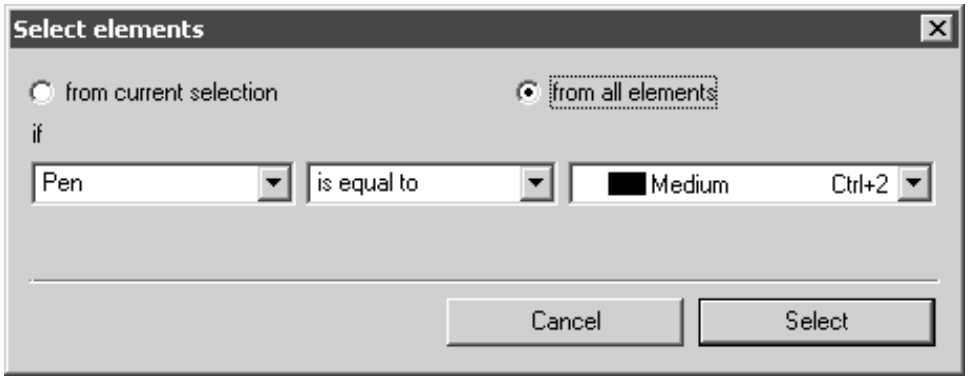

3. Now refine the selection to include only the currently selected ellipse elements. You can do this by removing Bézier path elements from the current selection.

   a. In the **Select elements** dialog box, click **from current selection**.

b. In the boxes under **if**, click **Type**, **is not equal to**, and **Bézier path**, and then click **Select**. This removes all Bézier path elements from the current selection and leaves the currently selected ellipse elements selected.

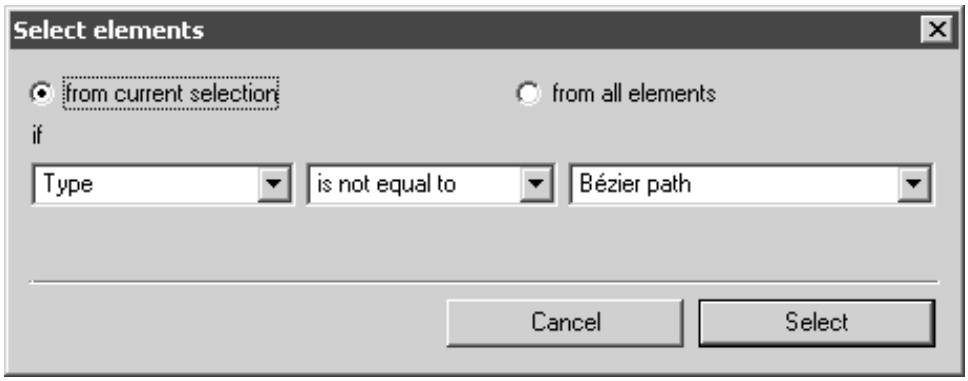

Move

The **Edit** ▸ **Move** menu is used to move or align elements.

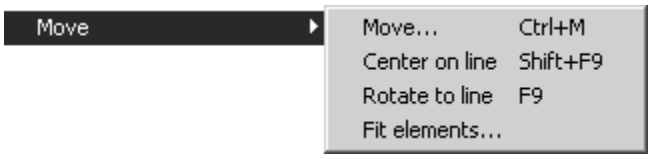

Move

Elements can be moved in several ways. One of these is to call up the **Move** dialog box with the **Edit** ▸ **Move** ▸ **Move**...menu and enter the desired values.

This procedure is described in Move on page 622.

Center on Line

The **Edit** ▸ **Move** ▸ **Center on line** menu allows you to align ellipses, threads, polygons or text elements. The elements are moved so that their center points, or with text elements the starting point, lie on the line.

Select a line and any number of ellipses, threads, polygons or text elements, then choose **Edit ▸ Move ▸ Center on line**.

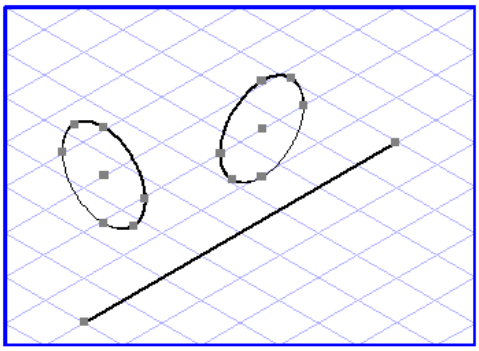

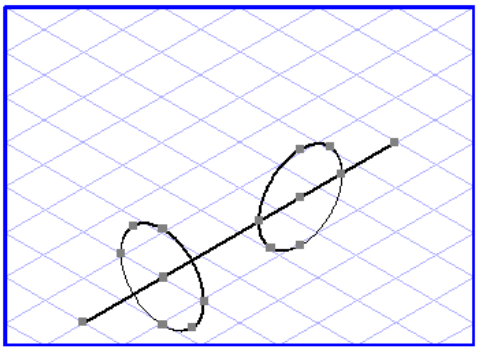

All elements are centered on the line.

Rotate to Line

The **Edit ▸ Move ▸ Rotate to line** menu aligns ellipses, threads and text elements to lines. The elements are rotated so that they are perpendicular to a line. Text elements are rotated in the direction of the line.

Select a line and any number of ellipses, threads and text elements, then choose **Edit ▸ Move ▸ Rotate to line**.

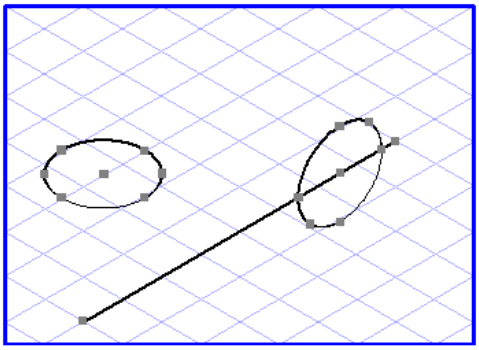

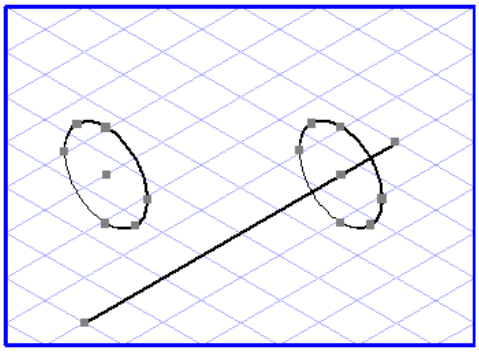

Fit elements

With the **Edit ▸ Move ▸ Fit elements** menu, you can fit selected elements or the whole drawing into the page (drawing area) or into a specified frame. The elements are scaled accordingly.

Select the elements you want to fit in, then choose **Edit ▸ Move ▸ Fit elements**.

The following dialog box appears:

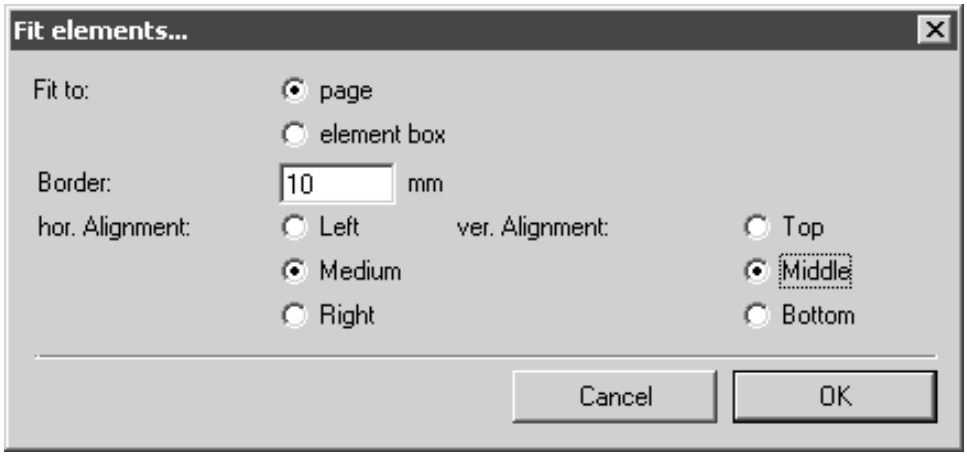

Fit To

Here you select whether the elements are to be fitted into the **page** or into an **element box** (frame).

Border

In this entry field, specify at what distance from the edge the elements are to be fitted in.

Alignment

You can use the **hor.** (horizontal) **Alignment** and the **ver.** (vertical) **Alignment** to determine the orientation of the elements on the fit-in template. If **Medium** and **Middle** are set for the horizontal and vertical alignments respectively, the elements will be centered on the template. If you set other alignments by clicking the button, the elements will appear aligned accordingly on the template.

Depending on the height/width relationship between the elements and the fit-in template, the alignments may not have an effect. If the height extent is greater than the height of the template for all elements, selecting a **ver.** (vertical) **Alignment** option will not affect the alignment of the elements. The orientation of the elements in the fit-in template remains the same. This also applies to the **hor.** (horizontal) **Alignment** options if the width of the element group is larger than the fit-in template.

Align

The **Edit** ▸ **Align** menu allows you to align elements. The selected elements are moved horizontally or vertically to align them with each other. With this command you can, for example, arrange text elements flush underneath each other with a single command. You can also use it to align symbols.

Select the elements you want to align, then choose **Edit** ▸ **Align** and select an alignment option. The elements are moved into the alignment position.

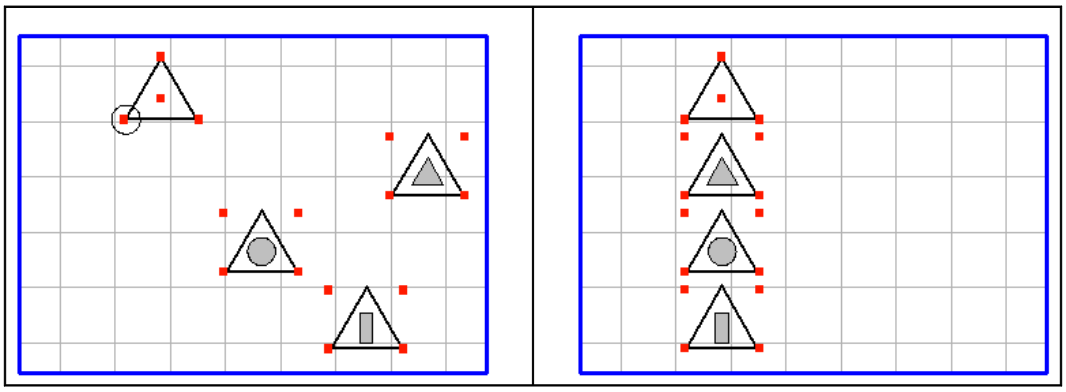

The final alignment position is determined by the contour and orientation of the elements. If you select **Left** alignment, as shown in the left-hand figure, the elements are aligned with the contour point lying furthest to the left. This means that all elements from the top element in the figure downwards are aligned vertically with an imaginary line underneath the top element (see right-hand figure). For **Right**, **Top** and **Bottom** alignments, the elements are moved accordingly.

For center alignment, the elements are moved to the center of the extent of all elements. Depending on which center you choose, **Medium** or **Middle**, the elements are moved to the center either horizontally (**Medium**) or vertically (**Middle**) relative to the extent.

Elements that are composed of several parts must be grouped. If they are not grouped, each part will be aligned separately.

Note

Ensure that the elements are a certain distance apart for the chosen alignment option. Otherwise they will be on top of each other after the alignment.

You can use the command to move the elements an even distance apart before aligning (for description see *Distribute on page 107**).*

Distribute

The **Edit ▸ Distribute** menu is used to align elements at the same distance from each other. The selected elements are moved either horizontally or vertically. You can use this command to, for example, arrange text elements easily at an even distance from each other. Symbols for electric or pneumatic circuit diagrams can also be positioned at regular intervals from each other in the drawing. The **Edit ▸ Align** menu can then be used to bring them into line.

Select the elements you want to distribute. Click the menu command and select one of the distribution options. The elements are redistributed in relation to each other. The two outermost elements remain in the selected distribution direction at their original positions.

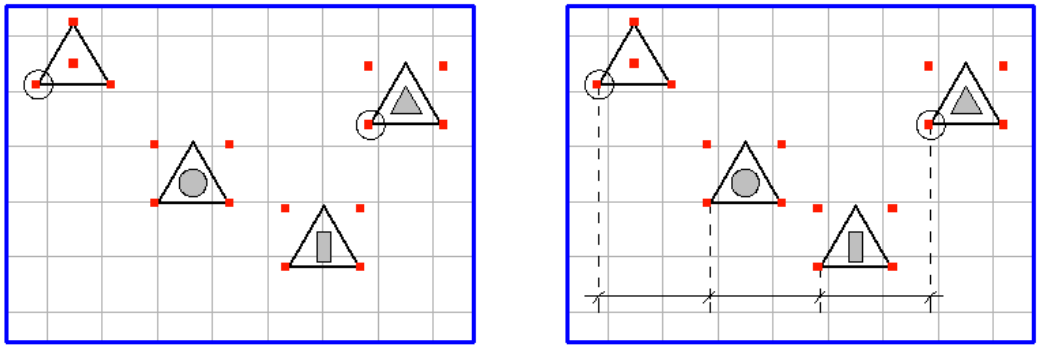

The new position of the other elements is determined by the contour and orientation of the elements. For instance, when you select **Left** distribution, the inner elements are evenly distributed over the section between the furthest left-hand contour points of the outermost elements. In the example, all the left contour

points of the triangles are located at regular intervals from each other following the distribution. This also applies accordingly to **Right**, **Top** and **Bottom** distribution. The elements are each distributed relative to the right, top or bottom contour point.

A center distribution makes the distances between the center points of the elements the same. Depending on which center you choose, **Medium** or **Middle**, the distances between the element center points are distributed horizontally (**Medium**) or vertically (**Middle**) in relation to each other.

Elements that are composed of several parts must be grouped. If they are not grouped, each part will be distributed separately.

Note

Ensure that the elements to be distributed are a certain distance apart. Otherwise they will be on top of each other after the distribution.

*You can use the **Align** command to align the elements evenly in relation to each other after distributing them (description see* *Align on page 106**).*

Preferences

Applies to Arbortext IsoDraw CADprocess only.

Preferences are groups of related settings that change how Arbortext IsoDraw appears and functions. The application installs with a set of default preferences you can use to get started. You can change any or all of these settings later to meet your needs. You can also reset preferences to their defaults after you change them.

This section describes preferences that affect the tools and working environment in Arbortext IsoDraw. Other preferences (not covered in this section) affect how Arbortext IsoDraw imports and exports various file formats. File format preferences are described separately in the *Arbortext IsoDraw Data Exchange Reference*.

In any dialog box that contains preference settings, you will find the buttons **Cancel** and **OK**. If you change preference settings in a dialog box, clicking **OK** saves your changes in the active file. If you do not want to save changes, click **Cancel**.

The **Preferences** command on the **Edit** menu opens the **Preferences** dialog box. This dialog box contains several preferences panels and a list of corresponding symbols on the left side. To display a panel, you click its symbol.

Each panel in the **Preferences** dialog box contains one or more groups of related preferences. These include:

- Grids and elements (…displayed first when you open the **Preferences** dialog box)
- Document format, dimensions
- Threads
- Using thick/thin pen technique
- Standard attributes
- Text format
- Dimension preferences
- Screen redraw
- Background display
- Enabling macro commands
- Highlighting during file comparison
- 3D options for 3D import, projection, and editing
- Browser window contents
- Animation
- Miscellaneous preferences
- Security
- Different file formats
- Administrator

Each panel in the **Preferences** dialog box contains the buttons **Factory settings** and **Undo**. Clicking **Factory settings** sets all preferences in the active panel to their default values. Clicking **Undo** causes any preferences you changed in the active panel to revert to their previously saved values.

The changes you make on the individual panels are not saved until you exit the dialog box with **OK**. None of the changes will be applied if you click **Cancel**.

Change Program Preferences

However, you can also change the preferences in general. Close all windows and then select **Edit ▸ Preferences**. If you now confirm your changes with **OK**, these will be saved in a file. These preferences will be written to a file named `IsoDraw Preferences`. Details of where you can find this file on your computer are given at the end of this section.

Grid

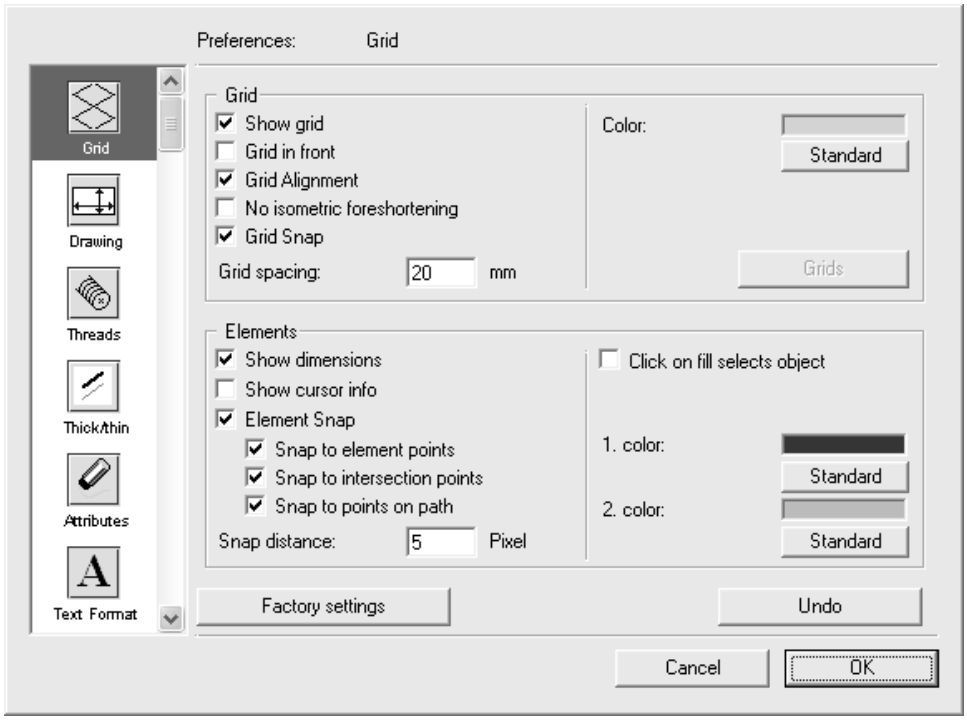

Grid

Show Grid

You can use this to specify whether or not the grid is to be visible in the drawing. This setting does not affect the grid snap.

Grid in Front

This lets you specify whether the grid is to be in front of or behind the drawing. If you select **Grid in front**, the grid is shown in front of an image element, for example.

Grid Alignment

If the **Grid alignment** option is selected, elements align automatically to the major axes of the grid used for drawing. This setting can also be toggled in the window bar at the bottom.

No Isometric Foreshortening

As in isometric perspective the same perspective foreshortening factor applies on all major axes it may be ignored. The drawing will be slightly larger then. This technique is based on techniques used for manual drawing.

Grid Snap

You can also specify whether the grid points are to be magnetic. If they are, each point you set with the cursor is set to the nearest grid point. It is irrelevant in this regard whether you are redrawing an element or, for example, are modifying an existing one. **Grid Snap** can also be toggled in the window bar at the bottom.

Distance

This field can be used to enter the distance between the grid lines in the set unit of measurement.

Color

The **Colors** edit dialog box is called up by clicking the **Color** field. Select the color for the grid lines using the standard color picker and the contrast selector.

Clicking the **Standard** button sets the standard program color (yellow).

Grids

The **Grids** button opens the dialog box **Edit grid** which allows you to edit and define grids. Use of this dialog is described in the section under the **Edit grid** command in Show Attribute Window on page 352.

This button is only available when changing the program preferences. You can then define an additional grid, for example, that you want to use in all illustrations.

Note

*Use the **Edit grid** command in the **Window** menu to edit grids in the current file.*

Elements

Dynamic Dimensions

Dynamic dimensions is used for displaying dimensions during dragging or when changing the sizes of elements. It is based on the current system of units and the scale.

This setting can also be toggled in the window bar at the bottom.

Show Cursor Info

With this setting, a small cross appears next to the cursor, along with information about the position of the cursor relative to the grid or an element.

The small blue cross close to the cursor indicates the exact position of the cursor.

Information appears to the right of the cursor. If the cursor is over an element, information corresponding to that element is displayed. Depending on the setting of **Element Snap**, the display shows whether the cursor is located exactly on an element point, on the center point or on a point where elements intersect.

If the cursor is outside the magnetic radius of element lines and points, the information shows that the cursor is on a grid point.

Cursor info is only active when **Draw elements in background** has been selected on the **Redraw** preferences panel. Grid snap and element snap must also be enabled. To ensure that all information is displayed, all three element point types must be selected under element snap.

Element Snap

The magnetic effect of element points, intersection points and all points on the element path is controlled by **Element Snap** ⌃. If you select these options, points of other elements will be attracted when they are set or moved if they fall within the magnetic radius.

This setting can also be toggled in the window bar at the bottom.

If you have decided for both a **Grid Snap** and **Element Snap**, this has the following effect on the drawing sheet. When redrawing, you must move the cursor or an element point within the magnetic range of an existing element, i.e. in the radius defined by you around an element point. The element point you wish to approach will then exert its magnetic effect. Otherwise, the new point will be attracted by the nearest grid point.

Magnetic Radius

This is used to enter the magnetic radius for element points in pixels (screen points).

Click on Fill Selects Object

When this option is selected, a filled element can be selected by clicking with the arrow cursor or the direct selection cursor in the filled area.

1st Color

The 1st color is used by the screen display to identify selected element points.

It can be set by clicking the color field in the **Colors** dialog box.

The **Standard** button selects the standard program color (red).

2nd Color

The 2nd color is used by the screen display to identify special points. These are thread points, selected Bézier points and deletion points. Elements without a visible contour are also displayed in this color in drawing mode.

It can be set by clicking the color field in the **Colors** dialog box.

The **Standard** button selects the standard program color (red).

Drawing

This **Drawing**  preferences panel contains preferences for creating drawings.

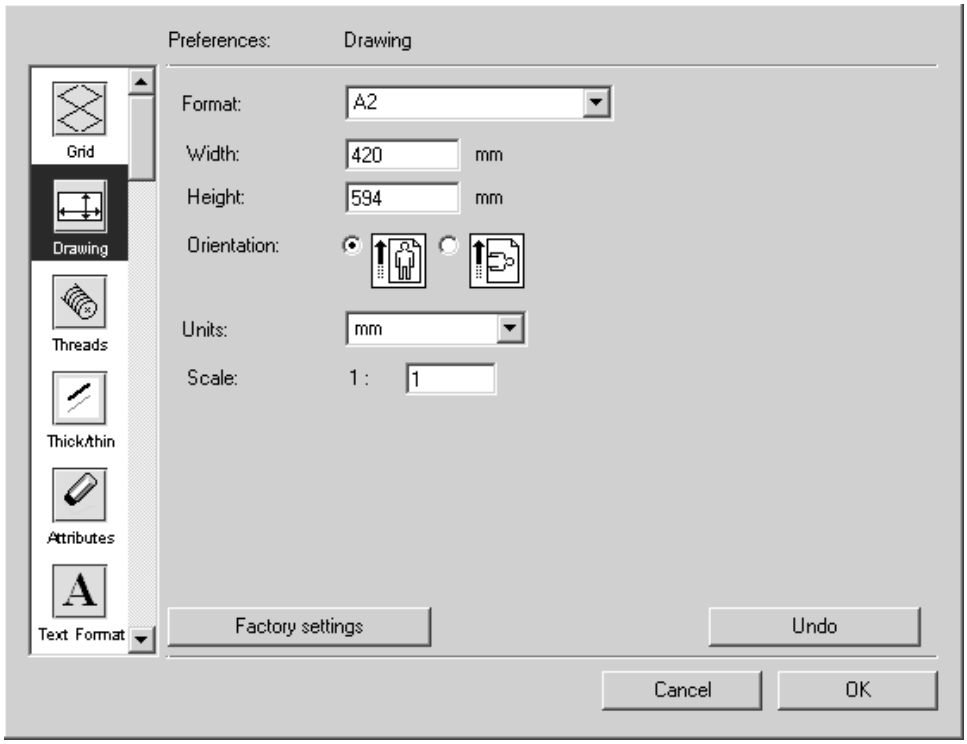

A pop-up menu offers you various predefined formats. The dimensions will be displayed in the **Width** and **Height** fields. If you define a customized format by entering numerical values in these fields, the **Free format** entry is activated automatically in the pop-up menu.

The orientation of the drawing sheet is specified by clicking the appropriate symbol.

The **Units** field in the pop-up menu can be used to select the system of units to be applied throughout the document. You can choose from `mm`, `inch` and `points`. The system of units for text, however, is based on `points`.

The **Scale** field allows you to set a conversion factor. All dimensions which are entered and displayed are converted automatically to the correct scale. Values larger than 1 result in a reduction, values smaller than 1 in an enlargement.

This panel allows you to specify the format and orientation of the drawing area, the system of units used and the scale.

Threads

The **Threads** preferences panel contains preferences for threads. Threads are generally only shown in simplified form in perspective illustration. Parallel ellipse arcs are used to simulate actual threads.

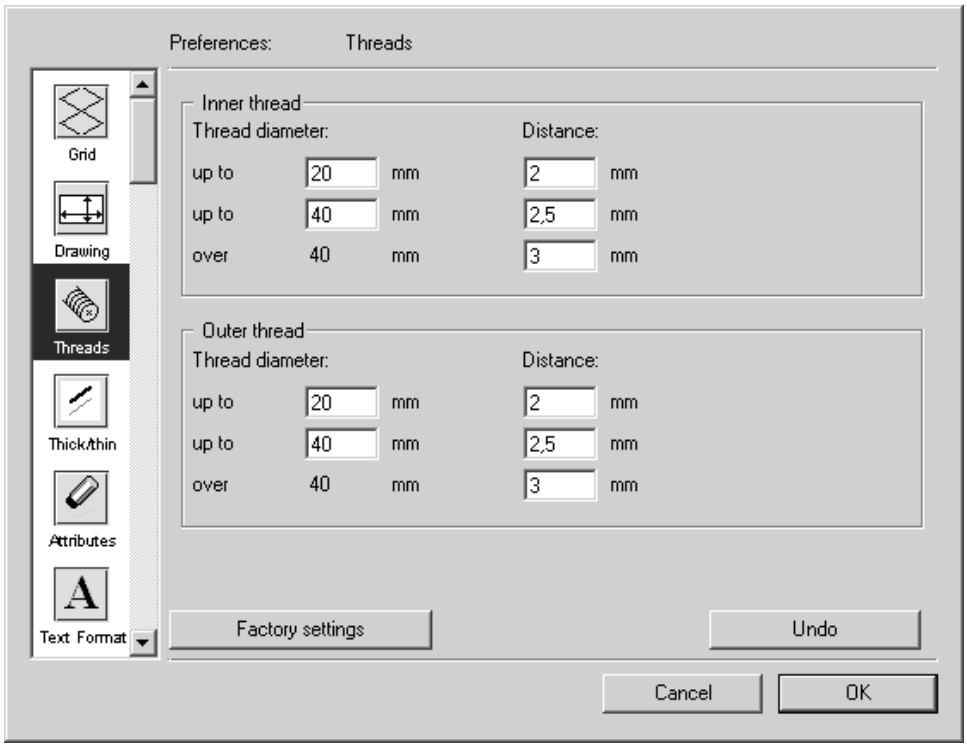

The **Distance** between these arcs represents a kind of thread pitch but is larger. Using a pitch which is correct from a technical standpoint would lead to printing problems in a perspective presentation since the individual threads would run together. Larger distances are therefore used.

Arbortext IsoDraw allows you to specify the distance as a function of the diameter of the threaded bore or the thread edge. You can enter values for three **Thread diameter** ranges, as shown on the **Threads** preferences panel.

Note

You should note two points when selecting values:

1. *If you reduce the drawing for printout or exporting, the distances should be selected larger.*
2. *If you want to print the drawing on a high-resolution output device instead of on a laser printer, the distances can be smaller.*

Thick/Thin

The **Thick/thin** preferences panel contains preferences for using the **thick/thin technique**, together with specific preferences for using pens with ellipses and threads depending on their diameter.

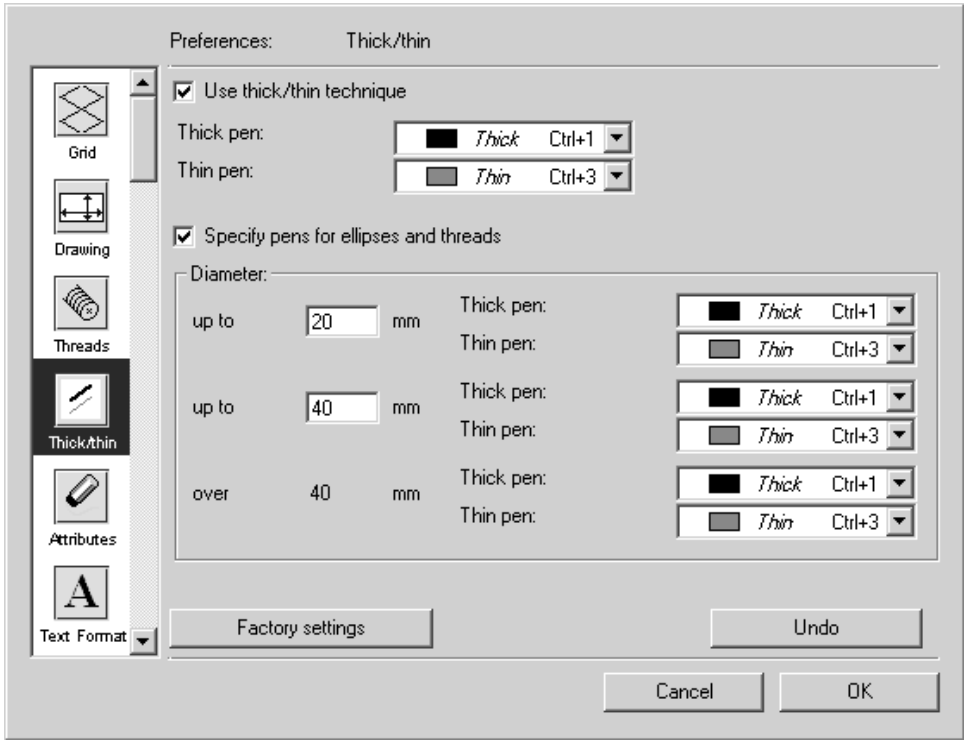

Use Thick/Thin Technique

Technical illustrations generally use two different line thicknesses in order to enhance the spatial effect of the presentation for inner and outer edges. If this technique is to be used, the appropriate pen can be defined using the pop-up menus under **Thick pen** and **Thin pen** respectively.

If this technique is not to be used for the pens, the pen currently selected in the **Pen** window will be used for all elements.

Specify Pens for Ellipses and Threads

For parts catalogs with parts of very different sizes or extensive assembly drawings, the broad lines produced by thick pens would run together when drawing e.g. small ellipses. To prevent this, it is possible to set increments for the pens you use. The first two setting options define the diameter up to which the selected pens are to be used. Under all three settings, selections can be made from the current pen list to match the application.

Note

Pen selection for ellipses and threads is only possible when the thick/thin technique has been selected first.

Attributes

This panel contains **Attributes** preferences for pens, styles, halos, colors, callouts, options for line ends and corners and printing options for ellipses.

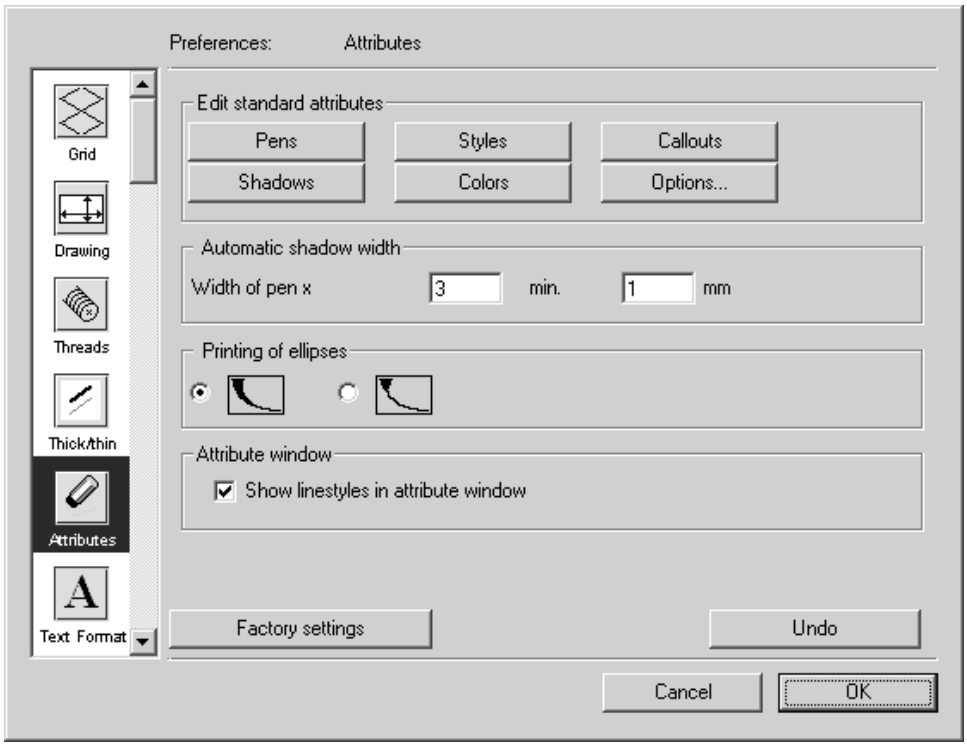

Edit Standard Attributes

Clicking on one of the buttons calls up the relevant edit dialog box. Here you can modify existing standard attributes and define additional ones.

The buttons are only available when you change the program preferences. You can then define additional pens or styles, for example, that you want to use in all illustrations.

For the currently active file, the settings for pens, styles, halos, colors, callouts and options are made in the relevant edit dialog boxes.

For working with dialogs, refer to *Edit pen*, *Edit style*, *Edit halos*, and *Edit callout style* in Show Attribute Window on page 352. For the **Edit colors** dialog refer to Show Fill Window on page 408. The dialog for options is described in Show Attribute Window on page 352 in the *Show Attribute Window* section.

Automatic Halo Width

Width of Pen x

A standard halo is normally drawn in triple the thickness of the line it is assigned to. You can change this factor in the input field.

Min

This input field is used for defining the minimum thickness.

Printing of Ellipses

Ellipses are generally drawn with two different line thicknesses in order to enhance the spatial effect of the presentation. Half of the ellipse is drawn with the **Thick**  pen, the other half with the **Thin**  pen.

Two options are available for ellipses and threads which can be used for defining the form of transition from one line thickness to another.

When the first option is chosen, a gradual transition is made at the changeover point in the printout, as would usually be the case with manual drawing.

No gradual transition is made with the second option, the transition is abrupt. This option can be preferable if you want to edit the drawing later in another program.

Attribute Window

The attribute window allows you to select the line styles. If the box is selected, the line style will also be depicted graphically along with the name. Otherwise only the name of the line style will appear.

Text

The Text Format preferences panel is used to define the standard text format. This format is used for all text elements provided you do not select any other format.

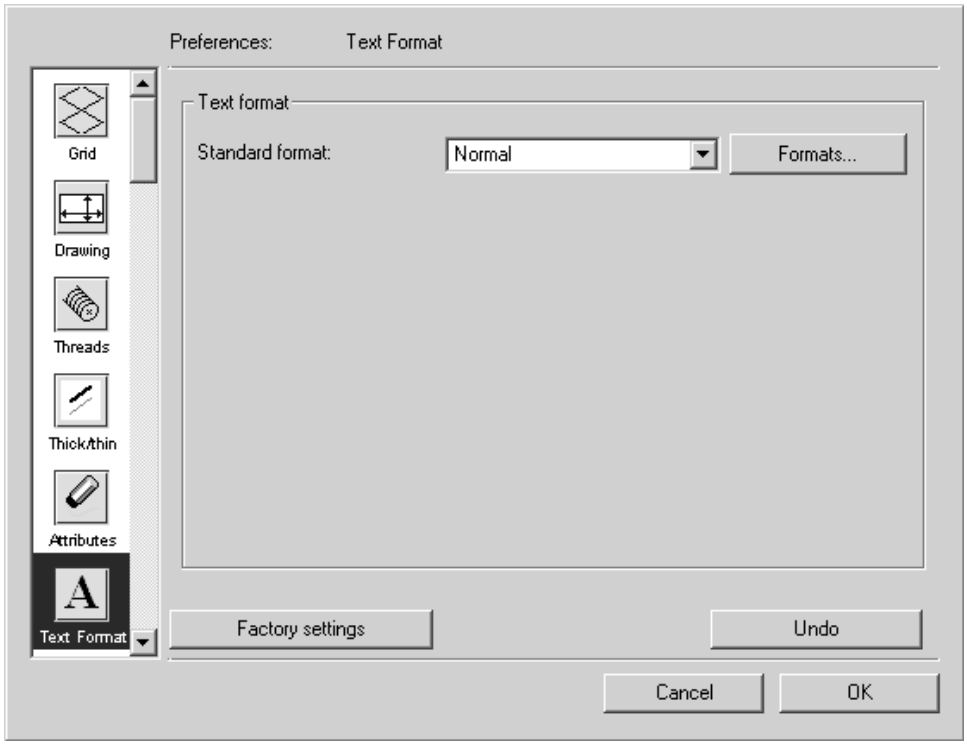

Text Format

This allows you to define which text format is to be applied for all texts. The `Normal` format appears in the pop-up menu as the default setting. Clicking the **Formats** button displays the **Text format** edit dialog box. Here you can select the new attributes for the `Normal` format or create a new format. The new format then appears automatically in the pop-up menu.

This button is only available when changing the program preferences. You can then define additional formats that you want to use in all illustrations.

For the currently active file, the settings for the text formats are made in the relevant **Text format** edit dialog box. For working with the dialog, refer to *Edit format* in Show Attribute Window on page 352.

Dimensions

On the **Dimensions** preferences panel, the offsets and lengths, together with the pens, styles and halos of dimension arrows and leader lines, are defined as standard for the dimension tools. The text attributes are also set for the dimensions.

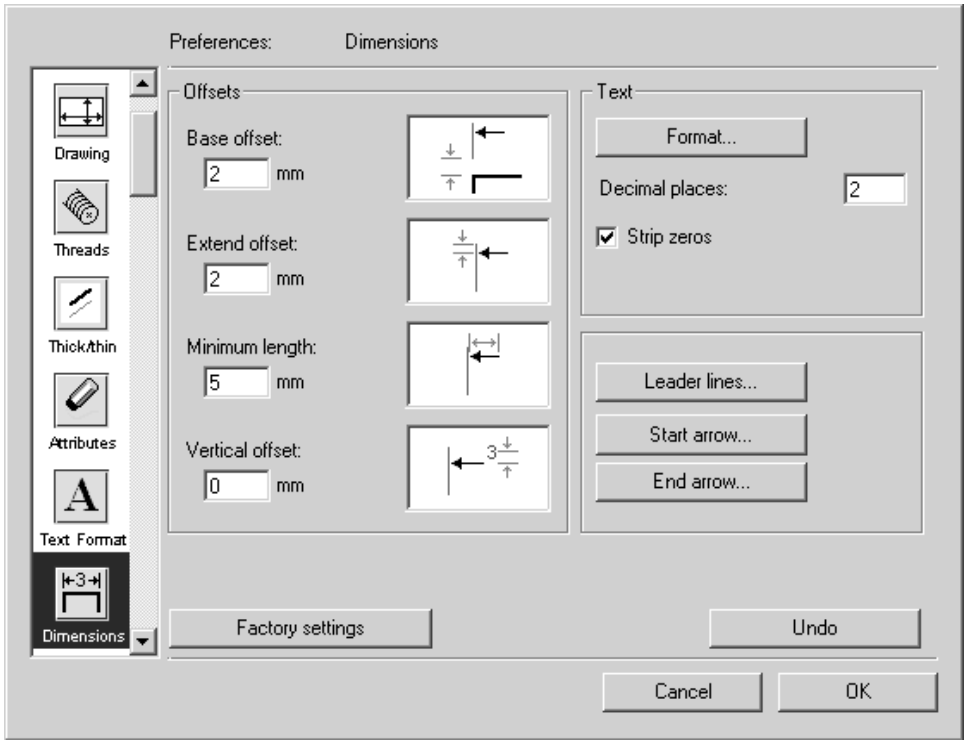

Offsets

Under **Base offset**, you can define how large the offset should be between the element edge and the leader line.

Under **Extend offset**, you can set how far a leader line should extend over the dimension arrow.

The **Minimum length** indicates the minimum length that a dimension arrow should be. For small dimensions, if the dimension value no longer fits between the two dimension arrows, the dimension arrows with the dimension are automatically positioned from outside to lie against the leader lines or the contour of the dimensioned element.

The entry in the **Vertical offset** field defines how the dimensions are positioned relative to the dimension arrow. If `0` is set, the bottom edge of the text element (dimensions) is at the same height as the dimension arrow. When the value is greater than `0`, the text element is above the dimension arrow. This also affects the

result for setting the minimum length. If the text element is above the dimension arrow, the dimension arrows can still be between the leader lines. If the vertical offset for the text element is 0 they are moved outwards.

An entry less than 0 is not permitted, as with all previous entries.

Pens, Styles, Halos for Lines

In the field at the bottom right you can assign pens, styles and halos to the dimension arrows and leader lines.

In the pen, style and halo dialog boxes, you can choose any options from the selection provided. Any additional pens, styles and halos that have been created are included in the current document.

The setting for the leader lines applies for the dimension leader lines.

The **Start arrow** and **End arrow** settings apply for the dimension arrows, their starts and their ends.

Text

The attributes for the Text element (dimensions) are defined under **Format** in the dialog box. One of the available text formats is selected. Font, font size, font face and character fill can all be set at will. Descriptions of the dialogs can be found in the sections on text menu commands.

Redraw

The **Redraw**  preferences panel contains preferences allow you to define the type of screen redraw employed and to set out the options for influencing the screen redraw process during operation.

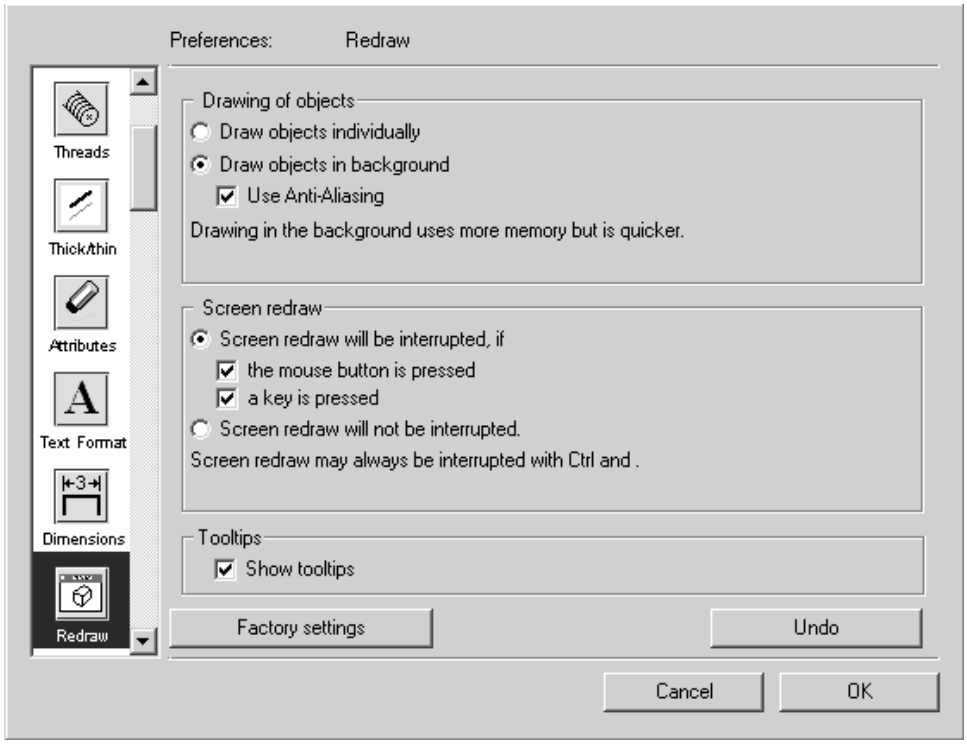

Note

Screen redraw preferences are treated as program preferences. The current setting always applies.

Drawing of Objects

You can define here how the screen is to be redrawn.

Draw Objects Individually

When this option is selected, all elements are drawn on the screen in succession. This method requires more time but less memory than the background redraw.

Draw Objects in Background

With complex drawings in particular, screen redraw is performed much faster if this option is chosen. The file is drawn in full in the background and only then is it copied in a single action onto the screen. This method is therefore memory-

intensive. With the **Use Anti-Aliasing** option you can optimize the screen representation of vector elements. Especially slanted elements in high zooming stages are shown in a smoother way. Anti-Aliasing requires a minimum resolution of 24 bit. 24 bit.

Note

Screen redraw in the background may perhaps seem to be slower since you cannot see the process happening. Measurements do show this option to be faster, however.

Screen Redraw

Screen Redraw will be Interrupted, If

In selecting this option, you authorize that screen redraw can be interrupted by specific actions. You can select only one of the two quoted options by checking the appropriate box (using mouse button or keyboard). Screen redraw is repeated in full after the interruption.

Note

For example, you do not need to wait for your drawing to be displayed in full in one magnification scale before enlarging it further.

Screen Redraw will not be Interrupted

With this option you can prevent screen redraw being interrupted at all.

Note

Regardless of the settings you have selected, you can completely cancel screen redraw at any time by entering the keyboard command CTRL+. (period character). The ***Redraw*** *command lets you update the screen after canceling.*

Tooltips

Tooltips is explanatory text which appears when you move the mouse over the toolbar symbols. If this box is not checked, tooltips will not be shown.

Background

The settings on the **Background** preferences panel affect how the image elements placed on the background layer are displayed.

You can choose between two display options:

The first displays the placed elements in a color freely selected by yourself, but does not depict tonal values (1-bit depth). This mode is particularly useful for line-art templates scanned in black/white.

You can define the display color by clicking the `color` field. You can choose the display color in the **Colors** edit dialog box.

Select the second option if, for example, you are working with photographs with tones (color or grayscale). The image elements are then displayed in their colors or grayscales. You can reduce the intensity by entering a percentage value (1% to 100%). A reduction in intensity may be useful, for example, if you want to use image elements as templates for tracing purposes.

Note

Image elements on the background layer are always printed in their original status regardless of the display mode selected.

The dialog box for specifying the background display can also be called up by means of the layer window by double clicking the background layer entry.

Tracing of Templates

Note

In older versions of Arbortext IsoDraw it was possible to open PICT files which were to be used as templates for tracing. This procedure became superfluous in Arbortext IsoDraw 3.0 due to the introduction of image elements. If you now need to trace photographs or other templates, you should proceed as follows:

Open the file saved in a raster format (e.g. TIFF or BMP) which you want to use as the template. A document is generated which contains the content of the file in the form of an image element. Open the layer window and click in front of the word ***Background*** *in order to make the background layer the active layer. Now select the image element and choose command* ***Selection to active layer*** *in the* ***Layers*** *menu.*

The image element is now located on the background layer and is monitored by the display options described earlier. You can now use the layer options to specify that the background layer cannot be printed or exported. You should also lock either the entire background layer or the image element.

This function also allows you to use several documents as templates simultaneously.

Macros

The settings on this **Macros** preferences panel define whether the commands listed in the **Macros** menu can be selected or not.

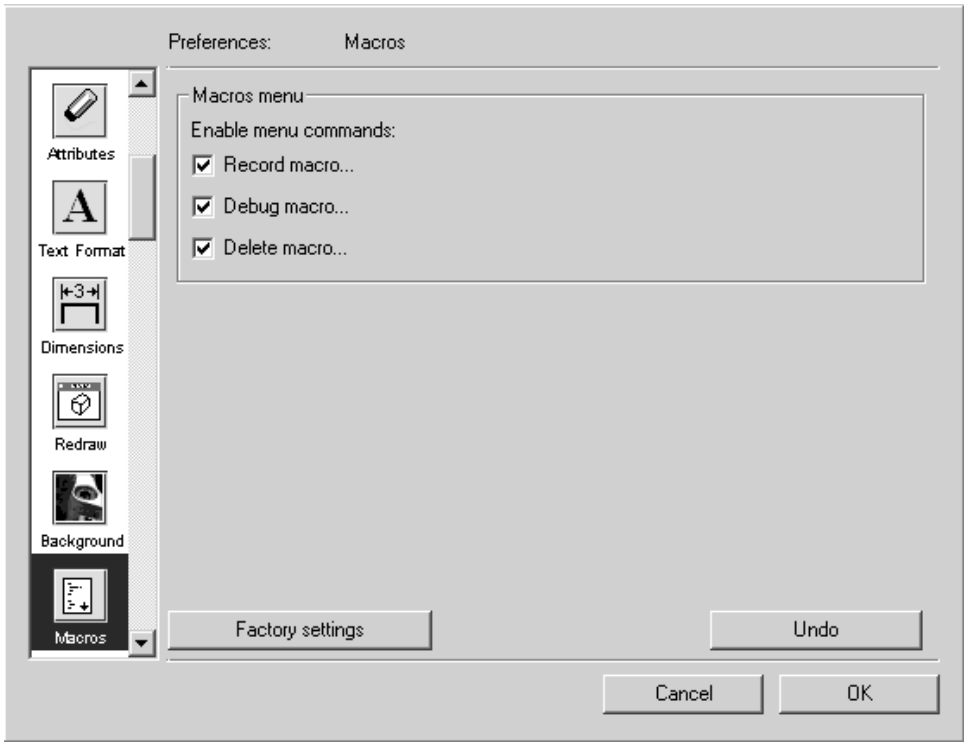

You can enable or disable each of the commands individually.

When all the commands are disabled, the macros menu only allows you to start generated macros directly and select the command **more macros**.

Note

These settings can prevent important macros from being deleted unintentionally.

Compare

The colors for highlighting the changed elements during file comparisons are set on this **Compare** preferences panel.

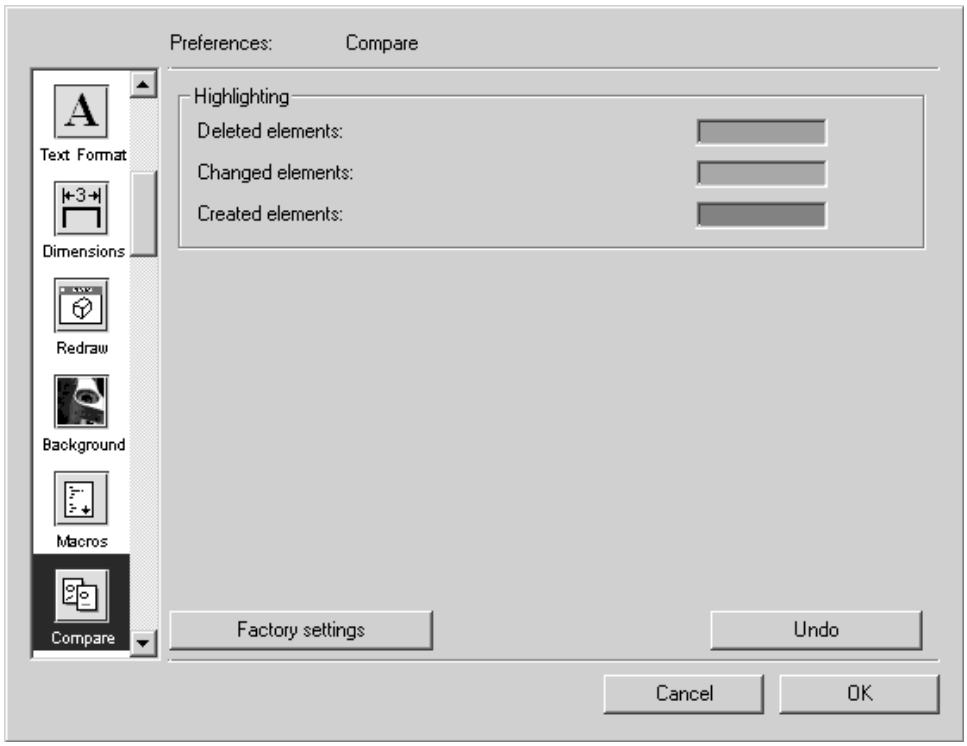

You can set the colors by clicking on the color field in the **Color** dialog box.

Select strong colors that contrast with each other as much as possible so that the different element types stand out from each other clearly.

3D Options

The **3D Options** preferences panel contains settings that affect:

- The smoothness and accuracy of imported 3D contours and surfaces.
- 3D projection into a 2D illustration.
- The ability to transform invisible parts in 3D mode.
- The visibility of 3D set bounding boxes in 2D mode.

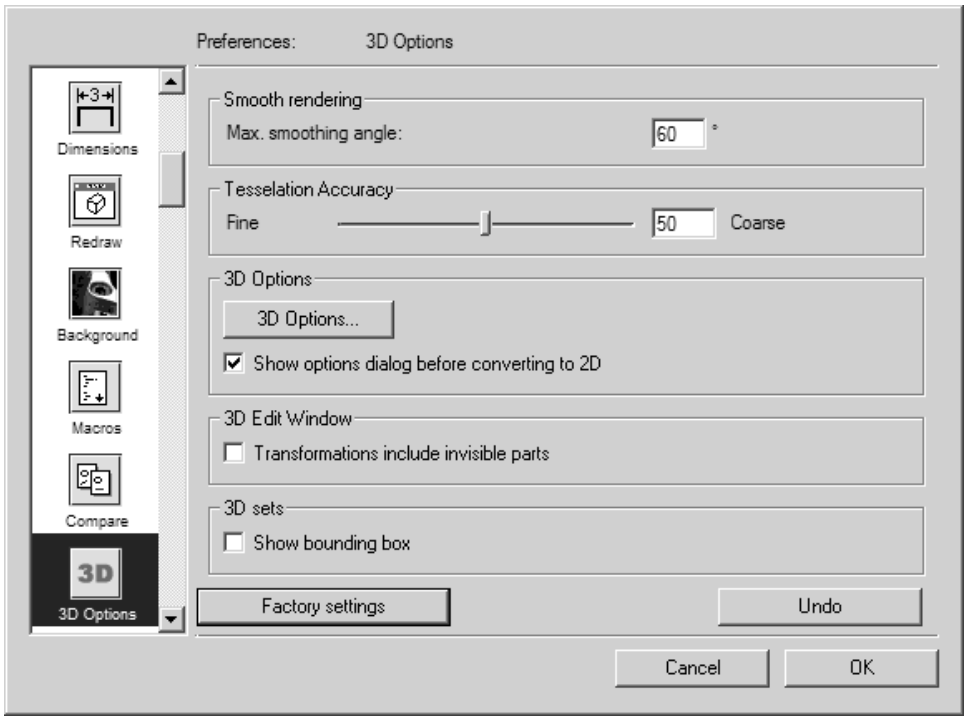

Smooth Rendering

This is where you can specify the smoothness for the **Smooth rendering** display option. The value entered for the smoothing angle affects the color grading between colored pixels. You can enter a value between 0 and 120. Using the default setting usually produces a good result in terms of depicting the color of your drawing. The higher the value, the softer the transitions between surface triangles are depicted. If a drawing contains several curved surfaces (cylindrical or spherical), a higher value for the angle produces a better result in the drawing. If the value is too high, this can lead to unwanted effects on straight surfaces. In certain circumstances, lines that are to be viewed as edges are also smoothed (e.g. a chamfer on a part). When deviating from the default settings, change the value little by little and monitor the effect on the drawing.

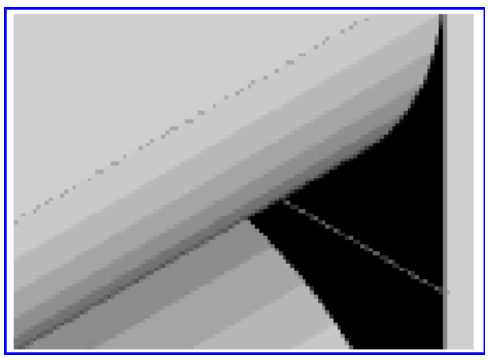

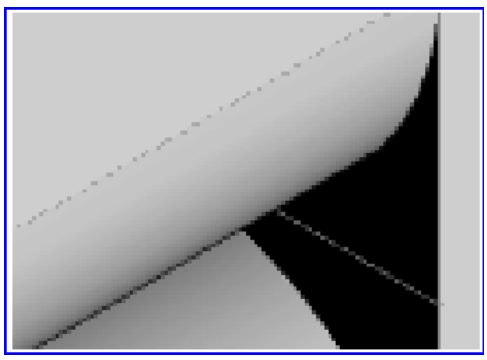

The examples illustrate the difference between Rendering and Smooth rendering. The figure on the left in rendering display mode depicts the curved surface with a stepped color blend. When smooth rendering is used, as in the figure on the right, the transitions between colors are barely visible.

Tessellation Accuracy

When importing IGES files Arbortext IsoDraw breaks up the surfaces it has loaded into triangles. This process is known as tessellation. The number of triangles created is determined by the setting. The setting allows you to specify how accurately the surfaces in the 2D illustration are to correspond to those of the 3D data. The rendering process as applied to the depiction of colors in 3D mode is also influenced by this setting. The value in the entry field has no unit. It ranges from 1 to 100 and tells you how coarse or fine the deviation of a surface will be after converting 3D data to a 2D illustration. The lower (finer) you set the value, the more accurately the surface will be adjusted. You can enter the value directly or use the slider.

The setting is particularly useful in the case of free-form contours and in the case of surface elements which touch at acute angles if no outer edges are involved. If the setting is very coarse and if two surfaces contact at too large an angle or if surfaces are curved, it is possible that no lines for the inner edges will be found. Since the generation of inner edges also always depends on the setting of the **Thin line threshold** function, the interplay between the two settings is important.

When the setting is finer, Arbortext IsoDraw CADprocess creates more triangles. This means that more inner edges can also be implemented. Since the setting is used for the entire drawing, a very fine setting coupled with a fine setting for the **Thin line threshold** can result in unwanted inner edges.

Note

The default setting `50` usually provides good results. If you wish to try a different setting, you must change the value before importing the 3D data.

The following three examples illustrate the effect of tessellation settings. To make the effect clear, the **Thin line threshold** has been set to `0` in each case. This means that all possible inner edges are depicted following projection. The example on the left shows the result with a very fine setting (value 1). The triangles that are created are very small and the contour is very accurate. The default value of `50` has been

used in the example in the center. The coarsest value `100` has been set in the example on the right. Few triangles have been created and the contour deviates more significantly from the 3D data settings.

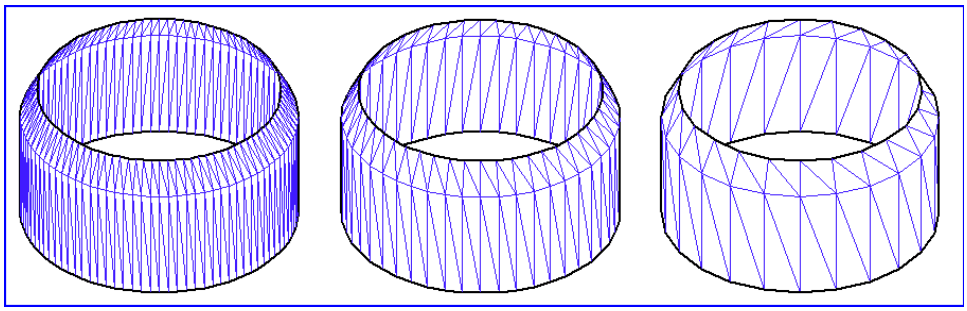

Note

The finer the setting, the more accurately the contour is depicted. However, at the same time, the amount of data increases due to the large number of elements. This influences the calculation time during work in 3D mode and during projection. The files also take up greater storage space.

The settings for tessellation accuracy (splitting surfaces into triangles) are only applied when importing or placing IGES files. If 3D data already consists of tessellated data – as in the case of e.g. VRML and Wavefront formats – these cannot be affected by the setting.

3D Options

Clicking the **3D Options** button opens the **3D Projection** dialog box with the settings for projecting the 3D data into a 2D illustration. You can preset the settings for all projections in the preferences. If the box next to **Show options dialog before converting to 2D** is not checked, the settings are applied during projection.

Note

Working in 3D Mode on page 671 *covers all the 3D options settings in detail with sample drawings. The following description is therefore restricted to only the most important information.*

The **3D Projection** dialog box appears as follows:

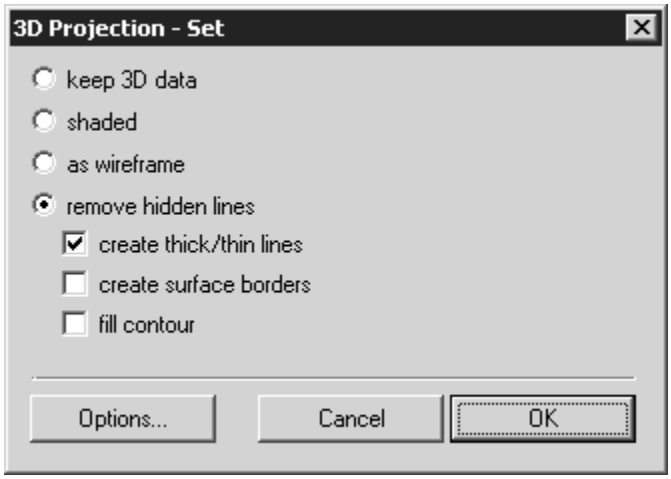

Keep 3D Data

If you select **keep 3D data**, the drawing is depicted in 2D mode using the display mode that was last selected in 3D mode. You cannot edit the drawing. You can make individual objects invisible using the object window. As this type of projection preserves all 3D information, you can change to 3D mode at any time using the **3D Transformation** command in the **Element** menu. You can then edit the drawing in 3D mode.

Note

*If animations have been created for objects in 3D mode prior to projection, only the following projection types can be selected in the **3D Projection** dialog box.*

Shaded

If you select **shaded**, the drawing appears in the Arbortext IsoDraw window as a raster image according to the display type selected in 3D mode. This type of projection is primarily intended for use with the **Rendering** and **Smooth rendering** display types in 3D mode. The drawing is converted as a raster image containing all the colors specified in 3D mode. After conversion, the drawing can be changed using the image editing tools.

As Wireframe

If you select **as wireframe**, all the elements in the 3D file will be transferred to the 2D illustration. The pens with their attributes from the 3D file are retained. The result of your 3D projection therefore corresponds to the original drawing from the CAD system.

Remove Hidden Lines

If you select **remove hidden lines**, the illustration will be displayed in your chosen perspective and orientation without hidden lines. This means that all elements are removed, which are invisible to the observer.

Create Thick/Thin Lines

If you click the **create thick/thin lines** box, the illustration will show the distribution of thick and thin lines for outer and inner edges, which is typical for technical illustration. The pens for thick and thin lines can be assigned in the **Options** dialog box.

Create Surface Borders

When importing 3D data, a large number of individual surface elements are loaded, particularly with the IGES format. If a file appears in 3D mode, you can easily recognize the surfaces with their delimiting lines as created in the CAD file.

If you select the **create surface borders** box, the missing inner edges are also converted from the delimiting lines. These lines are assigned a pen of their own in the 2D illustration.

Clicking **Cancel** allows you to exit the **3D Projection** dialog box. All changes are rejected. Clicking **OK** applies the current setting status to the projection. The settings are applied until the next change is made.

Options for Projection Type of Shaded

If you have selected **shaded** for the **3D Projection**, you can select various criteria in the **shaded** dialog box that can be used to save the raster image in Arbortext IsoDraw format.

Click **Options** in the **3D Projection** dialog box. The **shaded** dialog box appears as depicted below:

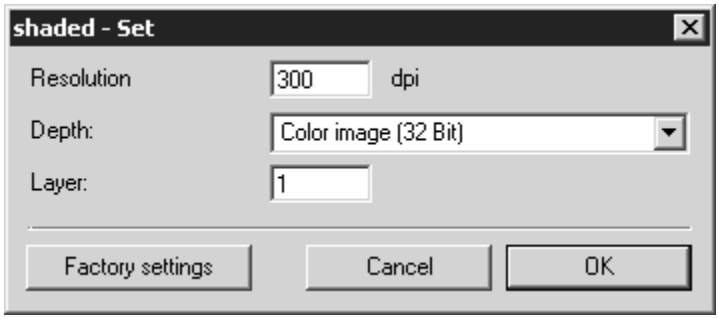

Resolution

Enter the required resolution here. The resolution defines how many pixels are present per inch (dpi = dots per inch). The higher the resolution, the better the quality. This however, also rapidly increases the size of the file at the same time.

Image Depth

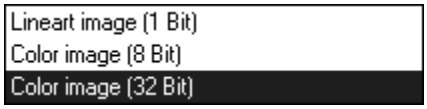

Select here whether the drawing is to be converted into black/white or one of the color modes. The image depth (bit depth) option essentially allows you to control how many different colors the Arbortext IsoDraw CADprocess file can contain. A line-art drawing can only contain black or white pixels. Color images are limited to 256 colors (8 bits) or any of the settings up to and including 16.7 million colors.

Layer

Specify here whether object information is to be taken over during conversion. The **Layer** that is to be entered here refers to the layers where objects within the file structure are located. Assemblies (objects) can contain subassemblies etc. Every icon in front of an object indicates a layer.

If `1` is entered next to **Layer**, all object information is discarded. All the objects are located on one layer. If you wish to preserve object information including all layers from the 3D-mode file, you must count the layers in the object window and enter the total next to **Layer**.

Note

Once the file has been converted with a sufficient number of layers, each object in the raster image can be individually selected and edited.

Options for Projection Type of Remove Hidden Lines

If you have selected **remove hidden lines** for **3D Projection**, you can select the pens to be used for the lines in the **Options** dialog box next to the setting for the insertion of inner edges. Under **Optimize** you can specify the type of elements with which the illustration is to be saved in Arbortext IsoDraw format. Click **Options** in the **3D Projection** dialog box. The following dialog box appears:

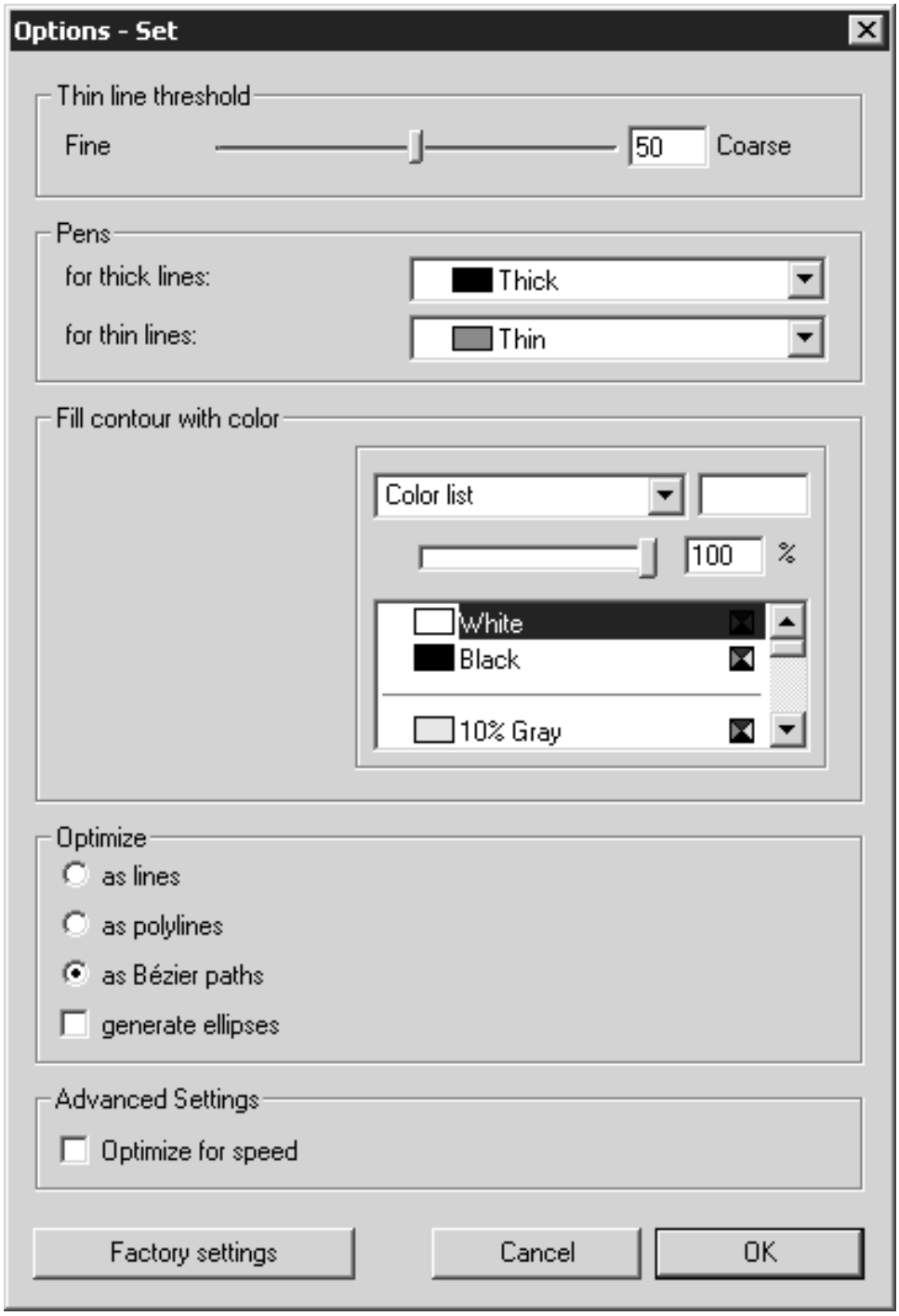

Thin Line Threshold

This is where you can specify at which transitions between the triangular surfaces Arbortext IsoDraw CADprocess is to set thin lines, or inner edges.

Note

If you are importing or placing IGES files, the number of possible inner edges is also determined by the ***Tessellation Accuracy*** *setting.*

The value in the display box has no unit and is used as a preference for internal calculations. You can enter values between 1 and 100. The higher (coarser) the value is set, the fewer inner edges are inserted. You can enter the value directly or use the slider.

You can see the results of your settings in the current drawing in 3D mode before initiating the conversion process. Particularly when working with large amounts of data, this has the advantage that you can see a preview of the converted drawing without needing to delay the conversion process. The drawing must be depicted in **HLR** display mode to do this. To make the new setting visible on the drawing, close the **Options** dialog box by clicking **OK**.

Pens

This allows you to select the **pens** to be used for outer and inner edges. Select the pen for the outer edges in the **for thick lines** pop-up menu. Select the pen for the inner edges in the **for thin lines** pop-up menu.

Optimize

There are three ways of selecting how elements from 3D data are to be defined as elements in Arbortext IsoDraw CADprocess.

If you select **as lines**, the 2D illustration will only contain lines in the form of unconnected elements. If you select **as polylines**, several lines which follow on from each other are grouped together into polylines. Selecting **as Bézier paths** converts those elements of the 3D data, which follow on from each other into a Bézier path. Conversion to Bézier paths gives you the best results in terms of contour accuracy for the illustration. What is more, the number of elements is far lower than for line elements, what facilitates subsequent operation and also reduces storage requirements.

If you click the generate ellipses box, the elements that together make up an ellipse form are converted into an ellipse. The ellipses generated in this way optimize the 2D illustration and are easier to use subsequently.

Optimize for Speed

If you click the **Optimize for speed** button, simplified calculations are carried out in some cases during conversion. This accelerates the conversion process.

Factory Settings

If you click the **Factory settings** button in the **Options** dialog box, the settings in this window will be set to the selections recommended by the manufacturer. Experience has shown that these factory settings will deliver excellent Technical Illustrations for most 3D data.

Clicking **Cancel** exits the **Options** dialog box. All changes are rejected. Clicking **OK** applies the current setting status to the projection. The settings are applied until the next change is made.

Show Options Dialog Before Converting to 2D

Selecting this box calls up the **3D Projection** dialog box for the projection to a 2D illustration when you click the camera button in the toolbar. There you can change the settings for the current projection as specified in the **3D Options** preferences dialog.

Note

You should select the dialog display if you wish to import unknown 3D data or need to convert very extensive data into 2D. This allows you to change the setting preferences prior to projection.

3D Editing Preferences

Applies to Arbortext IsoDraw CADprocess only.

The **3D Options** panel in the **Preferences** dialog box includes the 3D editing preferences, **Transformations include invisible parts** and **Show bounding box** (for 3D sets in 2D mode).

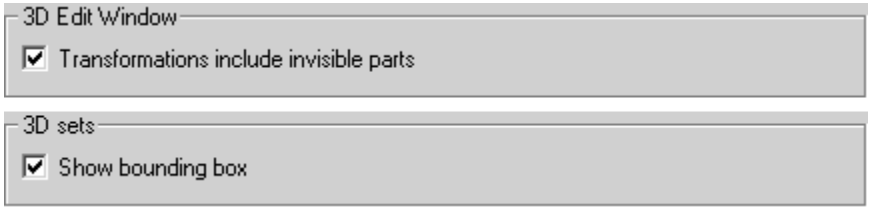

3D Mode Transformations Include Invisible Parts

Select **Transformations include invisible parts** if you want to 3D mode transformations applied to both selected visible parts and any invisible parts they contain. Supported 3D transformations include: **3D Move**, **Rotation**, **Reflection**, and **Scale**. If this setting is cleared (default), invisible parts inside of transformed 3D objects will not be transformed.

Note

Scale *transformations of hidden parts also apply to placed 3D objects that were projected into 2D with* ***keep 3D data*** *selected in the* ***3D Projection*** *dialog box. (See* *Projection into an Illustration on page 695.**)*

Show Bounding Box for 3D Sets

Select **Show bounding box** under **3D sets** if you a want to display a bounding box for each placed 3D set in 2D mode. The bounding box line color matches the **1. color** setting in the **Grid** preferences panel. (See Grid on page 110.)

Note

3D set bounding boxes are not displayed in 2D ***Preview*** *mode.*

If **Show bounding box** is cleared (default), bounding boxes for 3D sets are not shown in 2D mode.

The example below shows two placed 3D sets with bounding boxes in 2D mode after 3D projection into 2D with **keep 3D data** and **Show bounding box** selected.

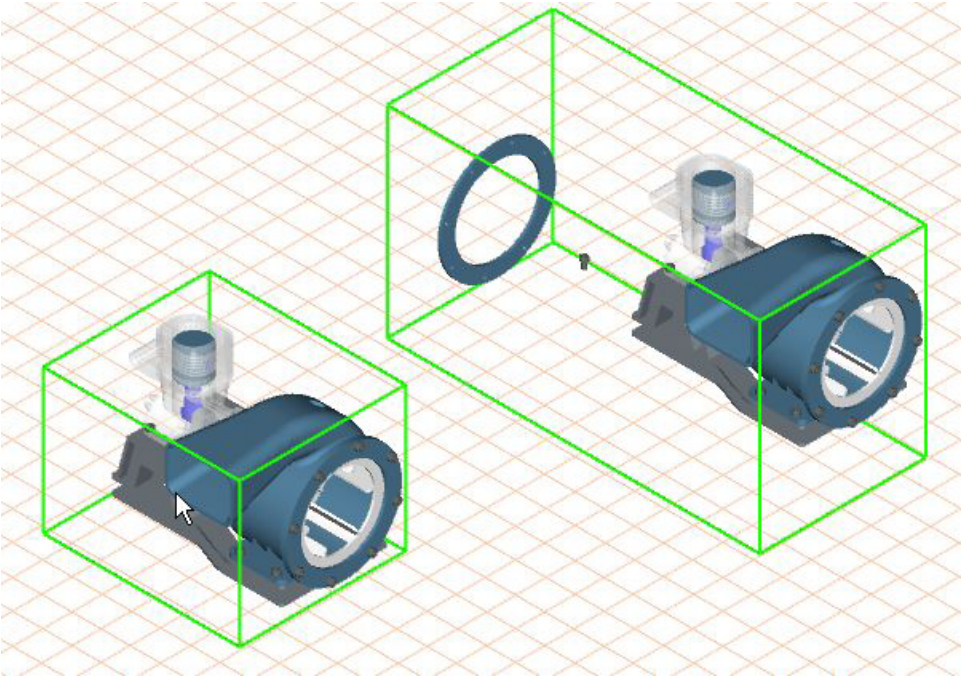

Changing 3D Editing Preferences in the Preferences File

You can optionally change Arbortext IsoDraw CADprocess 3D editing preferences by editing the Arbortext IsoDraw preferences file, `IsoDraw 7.2 Preferences.prf`. This file contains your preference settings in text format. Arbortext IsoDraw saves this file with your current preference settings each time you exit the application. The file is saved in the `Application Data` folder for your user name by default; for example, `d:\User Profiles\`*`username`*`\Application Data\PTC\IsoDraw\Preferences\IsoDraw 7.2 Preferences.prf`.

To change 3D editing preference settings, open the `IsoDraw 7.2 Preferences.prf` file with a text editor and find the setting you want to change under `CADprocess Preferences`, then change its value.

For example, to change the settings for 3D editing preferences, **Transformations include invisible parts** and **Show bounding box**, open `IsoDraw 7.2 Preferences.prf` and edit the values for `CADprocess_TransformInvisible3DSubObjects` and `CADprocess_Show3DsetBoundingBox`.

Allowed values for these settings are `0` and `1`.

For `CADprocess_TransformInvisible3DSubObjects`:

0	(Default) Invisible parts inside of transformed objects will not be transformed.
1	Invisible parts inside of transformed objects will be transformed.

For `CADprocess_Show3DsetBoundingBox`:

0	(Default) bounding boxes for 3D sets are not shown in 2D mode.
1	Bounding boxes for 3D sets are shown in 2D mode (when not in **Preview** mode).

The preferences file excerpt below shows these preference settings in the last two lines of the `CADprocess Preferences` section.

```
##########################################
# CADprocess Preferences:
CADprocess_3DProjectionFlags: 16962
CADprocess_SmoothValue: 50
CADprocess_ThickPen: 1
CADprocess_ThinPen: 3
CADprocess_Resolution: 72
CADprocess_ShadedLevel: 1
CADprocess_RenderSmoothAngle: 60
```

```
CADprocess_TesselAccuracy: 50
CADprocess_Show3DProjectionDialog: 1
CADprocess_TransformInvisible3DSubObjects: 0
CADprocess_Show3DsetBoundingBox: 0
##########################################
```

Browser Window

The **Browser Window** preferences panel allows you to specify which folders are to appear in the browser window. You can set the folder selection for the browser window using the options.

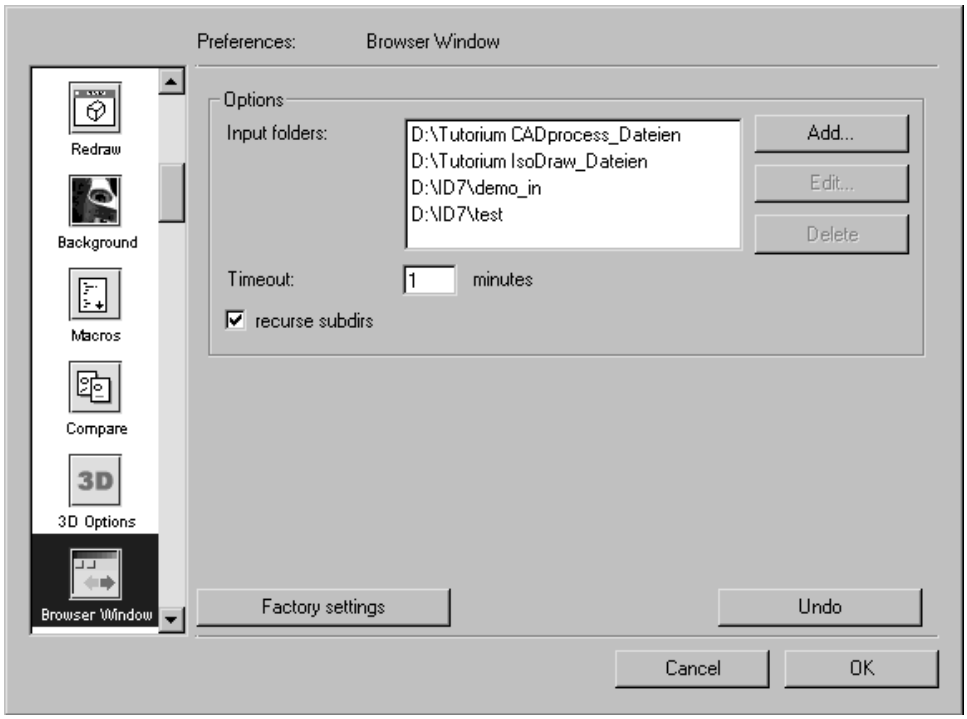

Options

Input Folders

All selected folders appear in the display box along with their storage location path.

Add

Clicking this button opens the following **Browse for Folder** dialog box:

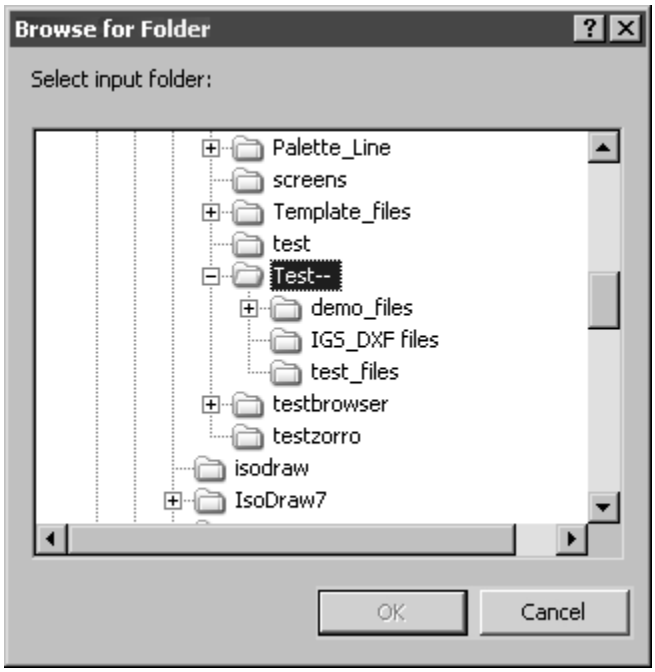

Select a folder from here. The folder is displayed in the browser window along with all subfolders and files. When **OK** is clicked, the selected folder is adopted into the list of input folders. Click **Cancel** to quit the dialog box without adopting a new selection.

Edit

Select an entry in the display box for **Input folders**. Clicking the **Edit** button opens the same **Browse for Folder** dialog box as when **Add** is clicked. If the selected folder is currently saved in another location you can search the folder. Clicking **OK** updates the link to the folder.

Delete

Select an entry in the display box for **Input folders**. Clicking the **Delete** button removes the folder from the list in the display box.

Timeout

The value next to **Timeout** specifies the interval at which the selected input folders are to be searched and updated.

Recurse Subdirs

Selecting this option specifies that the files in all the subfolders within the selected input folders are also to be displayed in the browser window.

Animation

The settings on this **Animation**  preferences panel affect animations.

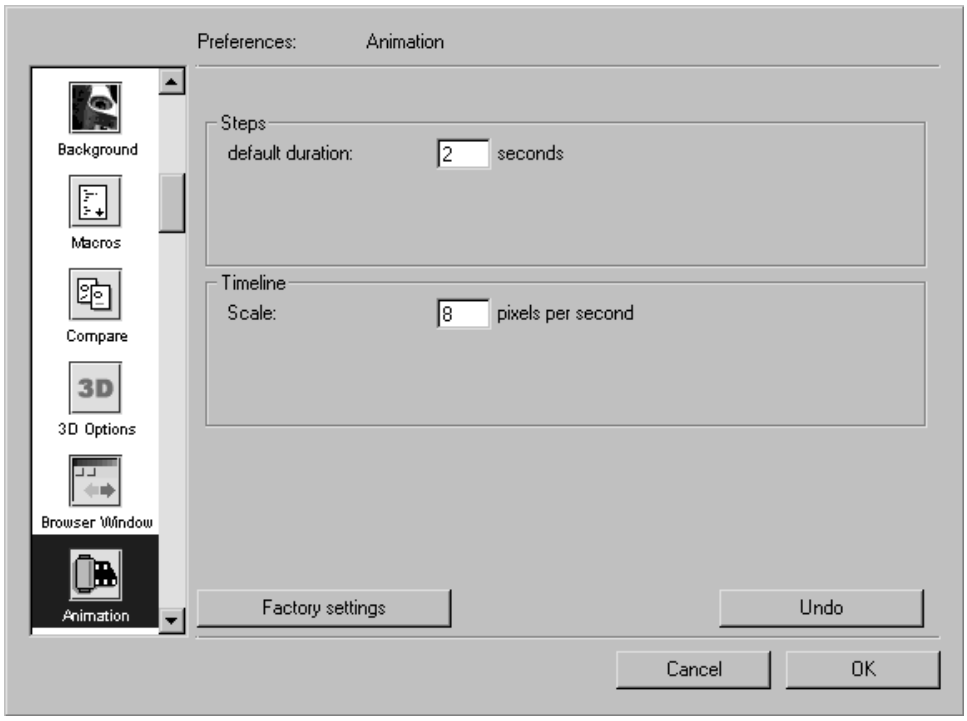

Steps

Default Duration

The value that is entered specifies how long an animation is to last. The default duration thus specifies the amount of time it takes to execute the step. The value also applies to pauses within an animation. If you are editing an animation, the value shown here is preset. You can change the value for each step and pause as you like in the animation dialog.

Timeline

Scale

The timeline is divided into seconds. The graduation of the timeline are stretched or drawn together depending on the value entered here. The **Timeline** dialog box enables you to alter the preset value according to the requirements of your animation.

Miscellaneous

The settings on this **misc**  preferences panel influence different areas in Arbortext IsoDraw. All settings are treated as program preferences.

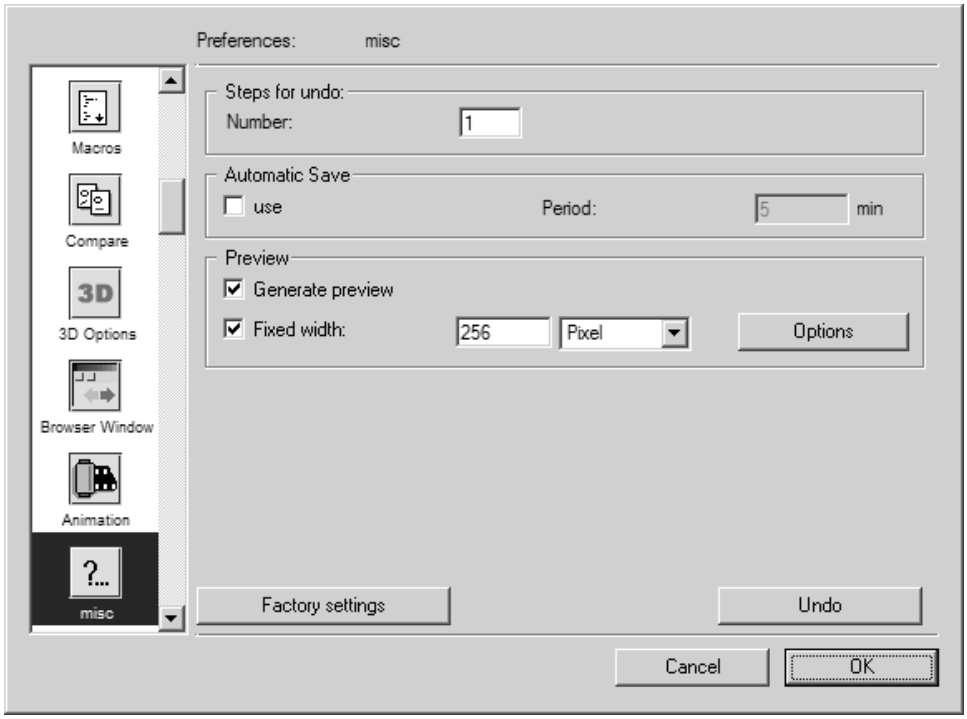

Steps for Undo

Here you enter the max. number of operations which can be undone.

Note

The number of operations which can be undone is treated as a program preference.

Arbortext IsoDraw saves as many operations as you specify at this point. You can use the menu commands **Undo** and **Redo** to undo these operations in the reverse sequence or steps or to redo them after they have been undone (for further information refer to the descriptions in these sections).

Note

Increasing the number of operations does not have any retroactive effect. In other words, you cannot cause operations to be saved which are older than the number of steps originally set.

Since saving earlier operations can be very memory-intensive, you should not set the number too high. It is generally advisable to limit the number of steps to be undone to three.

Automatic Save

This lets you define whether you want to allow automatic saving or not. If the box is checked, use the **Period** box to enter the interval at which automatic saving is to be performed.

Note

Regular automatic saving is treated as a program preference.

Preview

The settings under **Preview** determine if ISO drawing files are saved with an embedded (TIFF bitmap) preview image or not. They also let you adjust the values of TIFF preview image properties.

If an ISO file has an embedded preview, the preview image will appear:

- In the **Open** dialog box when **Preview** is selected and you click the ISO file name. (To display the **Open** dialog box, choose **File** ▸ **Open** ▸ **Open File**.)
- In Windows Explorer when you choose **View** ▸ **Thumbnails** and open the folder that contains the ISO file

Preview preference settings are described below:

Generate preview

- When selected, Arbortext IsoDraw generates a TIFF preview image of your drawing and saves it in the drawing ISO file. The preview updates whenever you save changes to your drawing.
- When cleared, no preview is generated. Saving an ISO file that has a preview while **Generate preview** is cleared removes the existing preview.

Fixed width

(This setting is only available when **Generate preview** is selected.)

- When selected, you can type a width for the TIFF preview image and select the width units. The height is set proportionally. (Previews are typically displayed as thumbnails or in small frames, so the default width is `256` pixels.)
- When **Fixed width** is cleared, the preview image will fit the width of the frame it is displayed in, with a height proportional to the displayed width.

TIFF preview image settings

Click **Options** to open the **TIFF** dialog box and adjust image settings for the TIFF preview. These are the same image settings as those under **Export** on the **TIFF** preferences panel. The factory settings in this dialog box are different, however.

For example, the default **Resolution** is `72` **dpi** for TIFF previews and `200` **dpi** for (typically larger) exported TIFF files. The factory settings for TIFF previews are also optimized for black and white line art rather than color renderings.

For TIFF image setting descriptions and instructions, see the TIFF section in your *Arbortext IsoDraw Data Exchange Reference.*

Embedding a preview image will increase the size of an ISO drawing file. File size is most affected by the dimensions and complexity of the ISO drawing and the value of the preview image's **Resolution** (**dpi**) setting.

Note

To find out how much an embedded preview increases the size of an ISO file, save the ISO file without a preview, then save it with a preview under a different file name. Compare the sizes of the two files.

Internet

Here you can set the time interval for automatically checking whether a new program version is available. This setting is enabled when the program is next started up. If a new program version is available, a message appears when starting the program.

When you click the **Check now!** button, the program checks immediately whether a new program version is available.

Security

The Security  preferences panel contains preferences for securing your files.

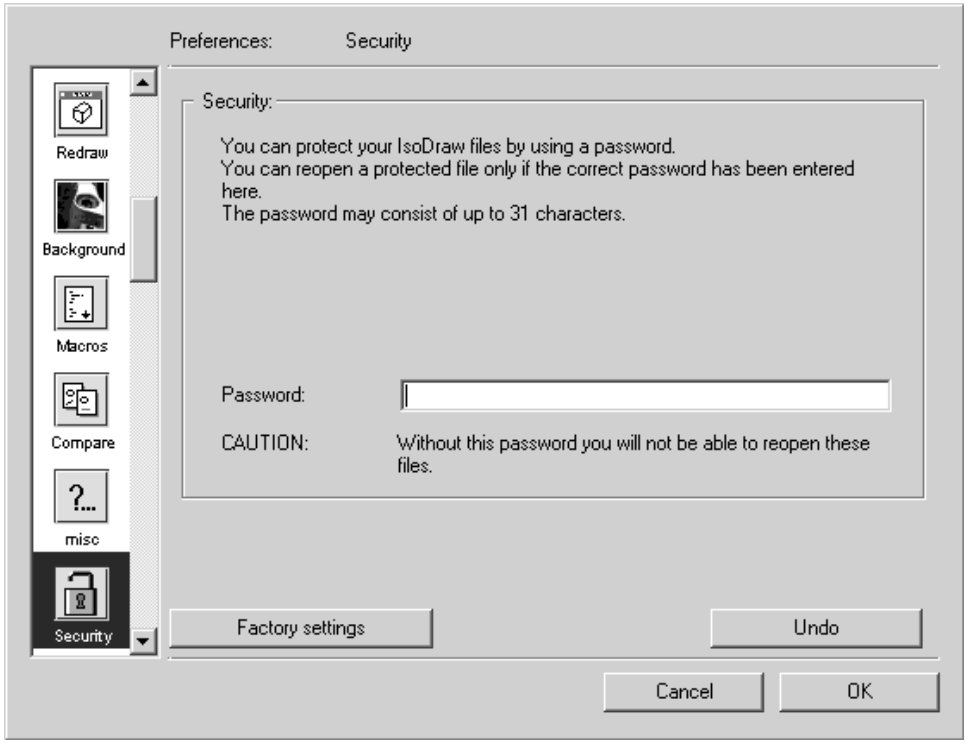

You may sometimes not want other Arbortext IsoDraw users to read or edit your files. In this case, you can protect your files with a password. Files that are protected with a **Password** can only be opened with an Arbortext IsoDraw version which uses the same password.

For a password-protected file, a closed red padlock symbol appears in the bottom window bar, on the left next to the size selection menu.

Note

Only make an entry at this point if you actually want to use a password! Note the password somewhere safe. If you want to open a protected Arbortext IsoDraw file later, you will first need to enter the password.

To protect your files, enter the password in the dialog box. If you confirm with **OK**, the password will become effective. If you click **Cancel**, the dialog box is closed and no changes are performed. Once the password is in place, all subsequent Arbortext IsoDraw files will be password-protected. You will also open Arbortext IsoDraw files saved with this password.

To cancel password protection, delete the entry in the dialog box.
Arbortext IsoDraw files will then be saved without password protection. However, you can then be unable to open any Arbortext IsoDraw files which are password-protected.

Preferences for File Formats

There are various options you can set when importing different formats. For this reason, a dialog box will appear every time you open an IGES file, for instance. This lets you check your preferences and change them if necessary.

If you want to load several files in the same format using the same settings, you can bypass this window. The preferences panel of the format in question contains a check box **Show dialog**. If this box is checked, the dialog box will be displayed, otherwise not.

Options are also available when exporting files. These are set on the preferences panel. You can also change these options by clicking the **Options** box in the **File** menu in the **Export** dialog box.

The CGM Export  CGM Export preferences panel shows the settings for exporting files in CGM format.

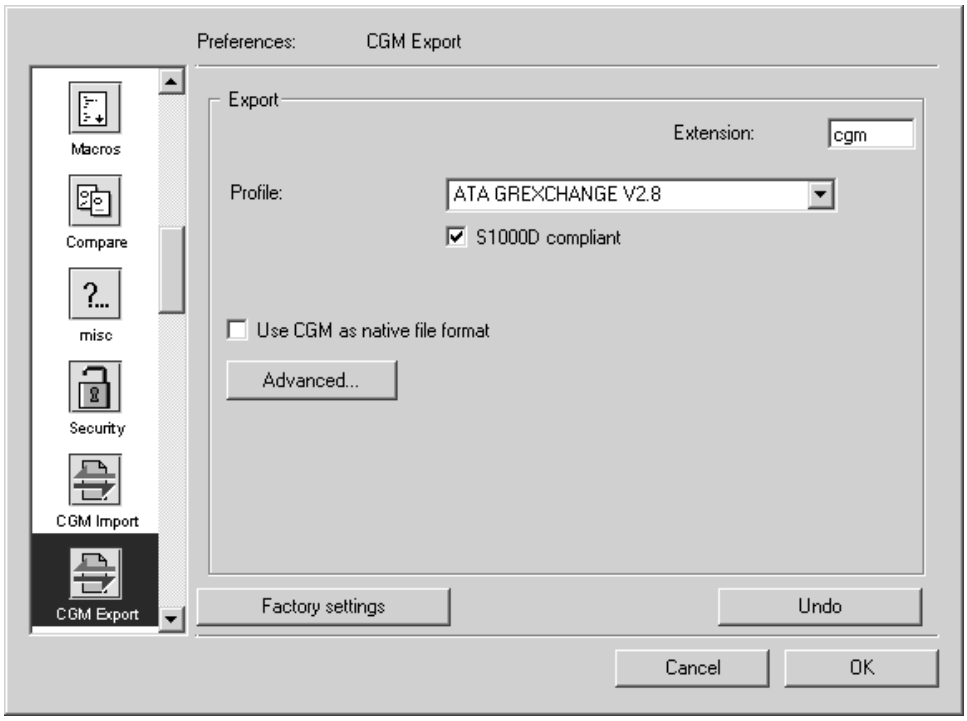

You can find a description of the import and export preferences for the individual formats in the *Arbortext IsoDraw Data Exchange Reference*.

Object List

In this **Object list** preferences panel you can define the preferences for exporting object lists. You can also change the settings defined here by clicking on the **Options** box in the **File** menu in the **Export** dialog box.

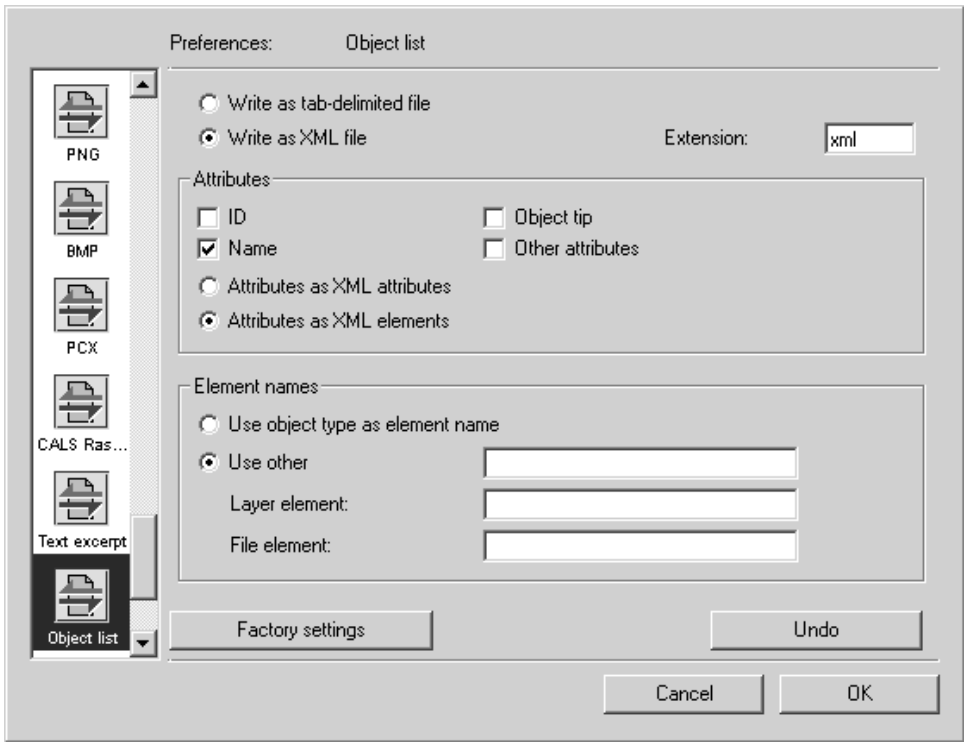

Write as Tab-Delimited File

Selecting this option exports the object list of the current file with the selected attributes as a tab-delimited text file. For instance, the file can be used again for a database. You can also use an object list to prepare the generation of callouts in the object window.

The settings for element names cannot be selected with this option.

The filename extension `.txt` is added.

Write as XML File

With this setting, an XML file with the selected attributes and element names is exported for the objects. An XML file of this type provides the option of saving data regarding graphic objects outside the graphic. The files generated can be used in XML companion files and opened and edited by all XML-compatible programs.

The filename extension `.xml` is added.

Attributes

Along with the IDs, names and object tips, additional attributes can also be saved for the object list in both file types.

Attributes as XML Attributes/Attributes as XML Elements

Object attributes can be copied as XML attributes or as elements in their own right.

Element Names

The **object type** is generally used as the element name. However, you can also enter your own element designations for name elements, layer elements and file elements under **Use other**.

Administrator

The Administrator  preferences panel enables you to lock each preferences panel individually.

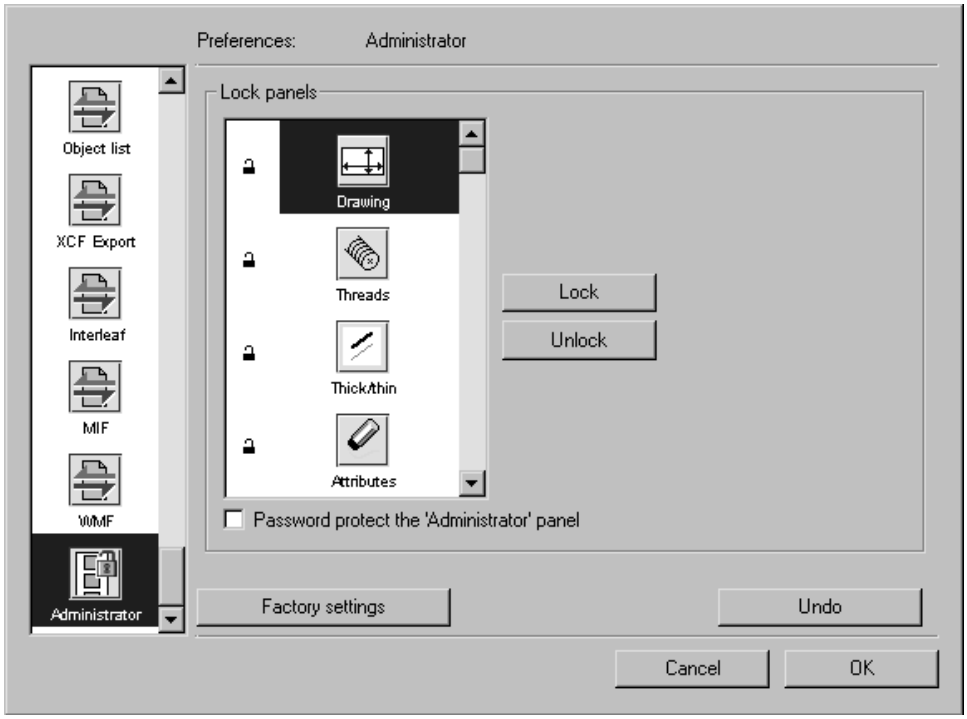

Settings on a locked preferences panel cannot be changed until the panel is unlocked through this **Administrator** preferences panel. If you select **Password protect the 'Administrator' panel** on the **Administrator** preferences panel, this panel

can only be opened by entering the password. This prevents impermissible changes to the defined settings on the preferences panels by program users not authorized to make those changes.

Lock Panels

The symbols for all preferences panels appear in the symbols list with a padlock in front of them. When you click on **Lock**, the preferences panel selected in the symbol bar can no longer be accessed. The padlock then appears closed. To open the padlock, select **Unlock**. Locking and unlocking can also be performed with a mouse click.

When a locked preferences panel is selected, Arbortext IsoDraw jumps automatically to the **Administrator** panel. The locked preferences panel can be unlocked here directly, without having to enter a password. However, if the **Administrator** panel itself is protected with a password, this must first be entered in the dialog box. Only then does the **Administrator** panel appear.

Password Protect the Administrator Panel

When this option is selected, a dialog box appears.

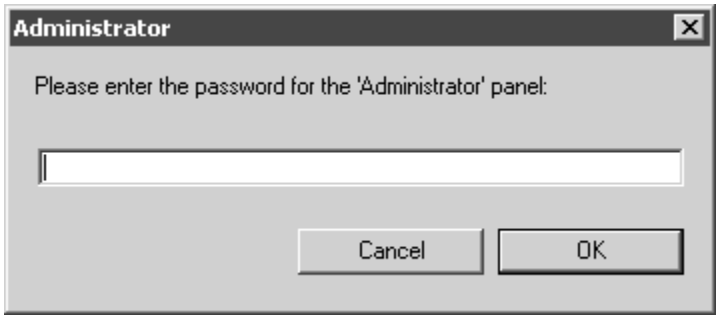

When you enter a password here and confirm with **OK**, the **Administrator** preferences panel can no longer be accessed without a password. If this panel needs to be called up again later by clicking on the symbol, the password entry dialog box appears again. When the password has been entered, the preferences panel appears as normal.

The password is stored in a separate file in the `Program\Preferences` folder.

Note

Only select the password option when you particularly want to protect preferences panels! Note the password somewhere safe. If you want to open the protected ***Administrator*** *panel later, you will first need to enter the password.*

Administration of Preferences

All preferences are saved in several files. Some files are created while installing the program, others are defined by Arbortext IsoDraw or yourself.

There are two directories where you can find preferences files:

- The program directory: *`Arbortext-IsoDraw-install-path`*`\PTC\Arbortext IsoDraw X.X\Program\...` of Arbortext IsoDraw
- Your user directory: *`Arbortext-IsoDraw-install-path`*`\PTC\Arbortext IsoDraw X.X\...`

The Arbortext IsoDraw `\Program` folder is created during installation. The program file `IsoDraw.exe` is located in the `Program` folder. In this folder you will find several subfolders which you must not delete. These subfolders include the preferences files among other things.

The user directory can be found in different locations depending on the operating system you are using. It can normally be found in the area where your user profile is saved.

Note

The easiest way to find the location is to start Arbortext IsoDraw once and shut it down again, so that the files will be created. Then search for the `Arbortext-IsoDraw-install-path\PTC\` folder.

The `PTC` folder also contains several subfolders, which correspond to the ones in the `Program` folder.

Note

You can find a detailed description of all folders and files in the guide, Installing Arbortext IsoDraw*.*

There now follows a summarized description of the folders with important notes.

Preferences Directory

In this user directory folder you will find the file `IsoDraw Preferences.prf`. It contains the user settings which you have defined with the command **Preferences**. You must not change this file, it is recreated by Arbortext IsoDraw each time the program is quit.

The folder of the same name in the program directory contains the definition files for object information These files are installed along with various DTDs.

Note

The files `webcgm.dtd` and `grexchange.dtd` must not be changed because they contain the descriptions of the defined object models of the corresponding standard.

There might be more DTDs, which have been installed by you. More details on how to define DTDs can be found in Select DTD on page 294.

Arbortext IsoDraw defines special preference files for different formats. In these, complex or rarely used preferences are described. This includes for example the color tables for DXF and DWG or the font tables for different formats. These files are only created in the `Preferences` folder of the user directory if you have clicked the **Create PRF file** button for the relevant format in the **Preferences** dialog box. The files can be modified with a text editing program. The file names begin with `Opt` and end with `.prf`, e.g. `OptCGM.prf` for CGM.

`Patterns` Directory

In this directory the Arbortext IsoDraw files are saved which contain the definitions for hatchings and bitmap patterns. Together with the program the files `Standardhatchings.iso` and `Standardpatterns.iso` are installed.

Note

The standard hatchings must not be modified, as they are required for the CGM data exchange.

There might be more files with hatchings or bitmap patterns, which have been created by you. More details on how to define hatchings and bitmap patterns can be found in Show Fill Window on page 408. Some files can be archived in both the user directory and program directory.

`Templates` Directory

In this directory Arbortext IsoDraw files are saved which are used as templates. Further information on template files can be found in New on page 17. Some template files can be archived in both the user directory and program directory.

`Extensions` Directory

Arbortext IsoDraw plugins are saved in this directory. For example the file for the **Batch Tool** is installed here (in the program directory). The functionality of Arbortext IsoDraw can be enhanced with plugins such as these.

`Documents` Directory

You can find the online documentation for Arbortext IsoDraw in this directory (in the program directory).

`Library window` Directory

All Arbortext IsoDraw files that contain library drawings are saved in this directory. The prepared library files are installed along with the program.

There might be more files with library drawings that have been added by you. More details on how to create library files can be found in Show Library on page 440. Some library files can also be archived in the user directory.

`Macros` Directory

All files that contain macros are saved in this directory (in the user directory). These files are saved in the user directory folder when the program is exited.

More details on creating macros can be found in Macros on page 460 and in the separate *Arbortext IsoDraw Macro Language Reference*.

Which Folder Comes First?

When installing Arbortext IsoDraw the preferences are created in the `PTC` program directory. These preferences are available for all users that launch this program version. The `PTC` directory is created after the software is first launched. It contains the preferences files and user-specific files saved by the program.

If Arbortext IsoDraw does not have access to a user directory, the preferences in the program folder are used. This is especially important if Arbortext IsoDraw is installed on a server. In this case, you should install all DTDs, preferences files, templates, bitmap patterns, hatchings and Plug-ins which you want to make available to all users in the program directory.

Only the preferences of the individual user are saved in the `PTC` user directory. This is where you can archive templates or patterns that can only be accessed by this user.

During startup Arbortext IsoDraw reads the preferences from the user directory first and then the preferences from the program directory.

3

Element Menu

Most commands in the **Element** menu can be selected by keyboard commands. If there is a key combination command code, it is indicated next to the command text.

The figure shows which commands in the **Element** menu can be selected using a command code.

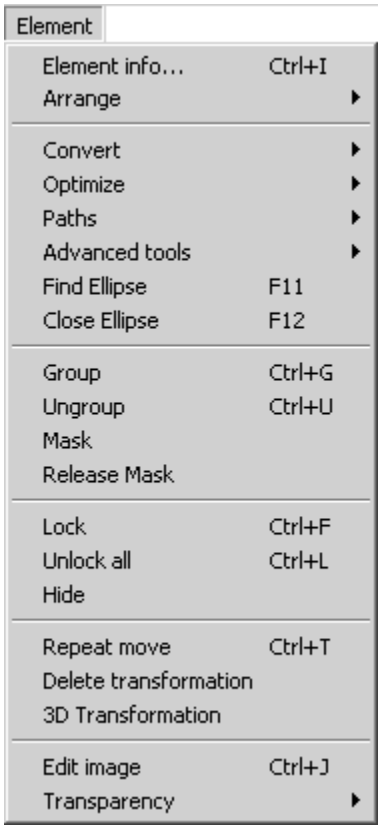

Element Info

You can use this dialog box to read the orientation and extent of the elements. There are also specific **Element info** dialog boxes for callout elements, element groups, placed elements and objects. The displays in the **Element info** window can be viewed. The element settings can be changed.

Element Info for an Element

Select an element and choose **Edit** ▸ **Element info**:

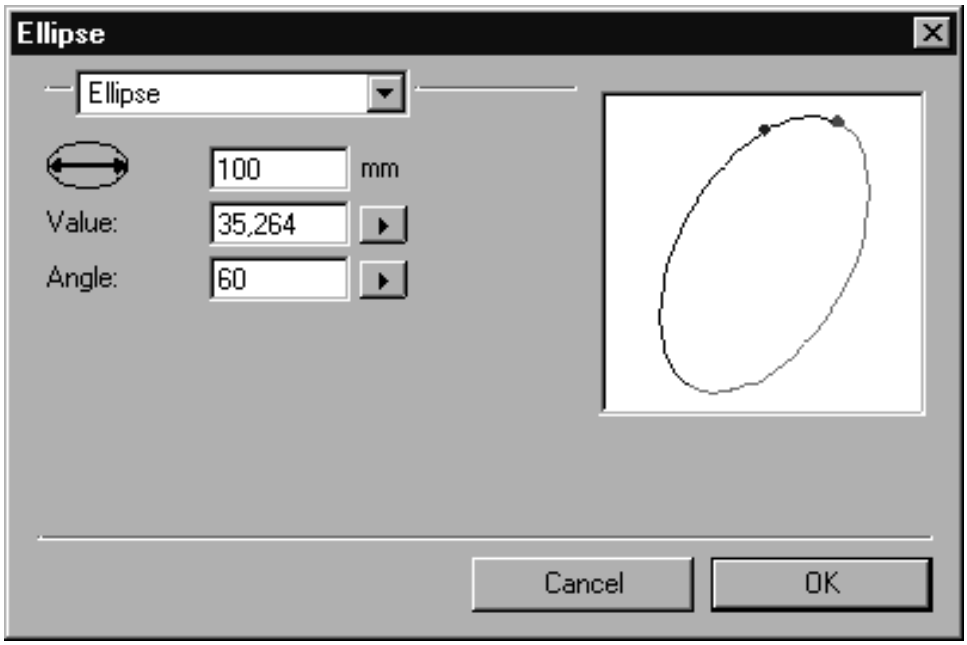

Note

Information on the orientation and extent can only be called up for an individual element.

The extent of the elements can also be read directly from the dimensions bar at the bottom of the window. If an element is active, up to four dimensions will be displayed. The active element type determines which, and how many, dimensions appear in the dimensions bar.

Each element type has a specific dialog box. Refer to the relevant descriptions in the sections on elements to see how these dialog boxes are structured and what setting options are available for the various element types.

Element Info for a Callout Element

Select a Callout element and choose **Edit ▸ Element info**:

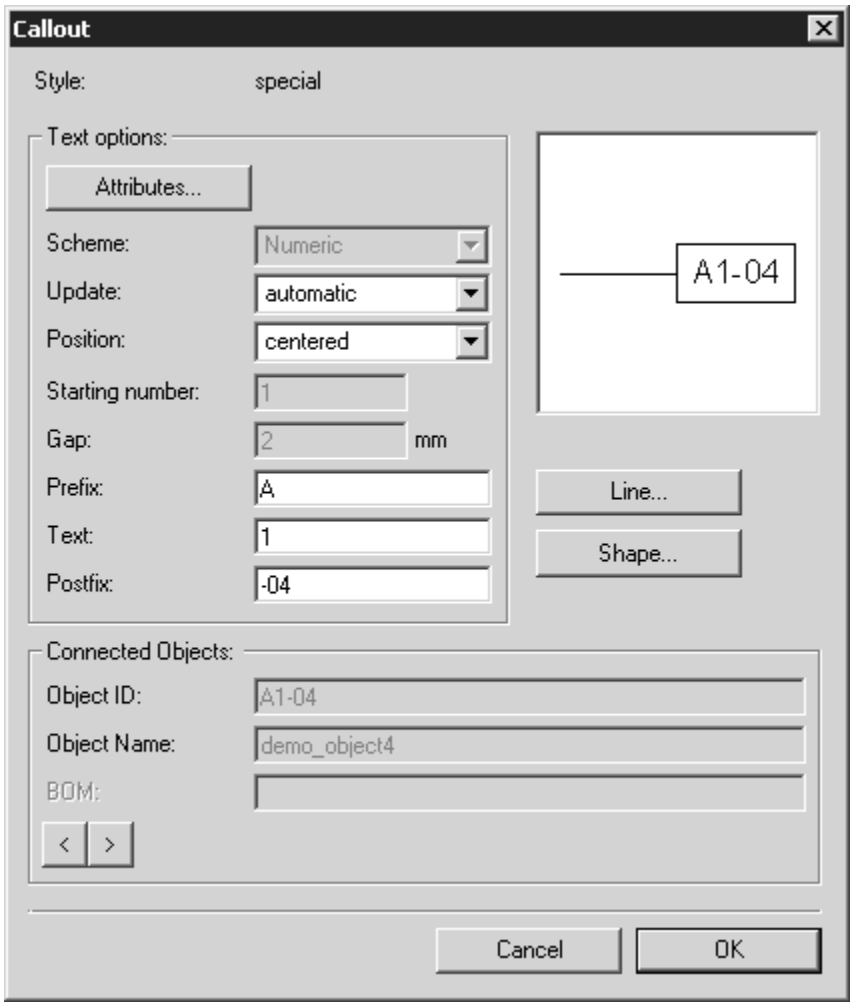

The style used and the style options for the element are shown here. You can change the settings of the text options. When you change settings, the style of the invoked element is overwritten.

The general settings for a style are performed in the attribute window. You can find a description of the setting options in Show Attribute Window on page 352.

If the Callout element is a connected callout, you can view information about its connected objects, such as **Object ID** and **Object Name**, under **Connected Objects**. If multiple objects are connected to this callout, click the arrow buttons under **Connected Objects** to view information for the next or previous connected object. (See Callouts Connected to Objects on page 568.)

Note

*You cannot edit the object information under **Connected Objects** in this **Element info** dialog box. If you want to change connected object information, see Object Info on page 223 and Editing Objects with Connected Callouts on page 570.)*

Element Info for Groups

For groups, the following information is displayed:

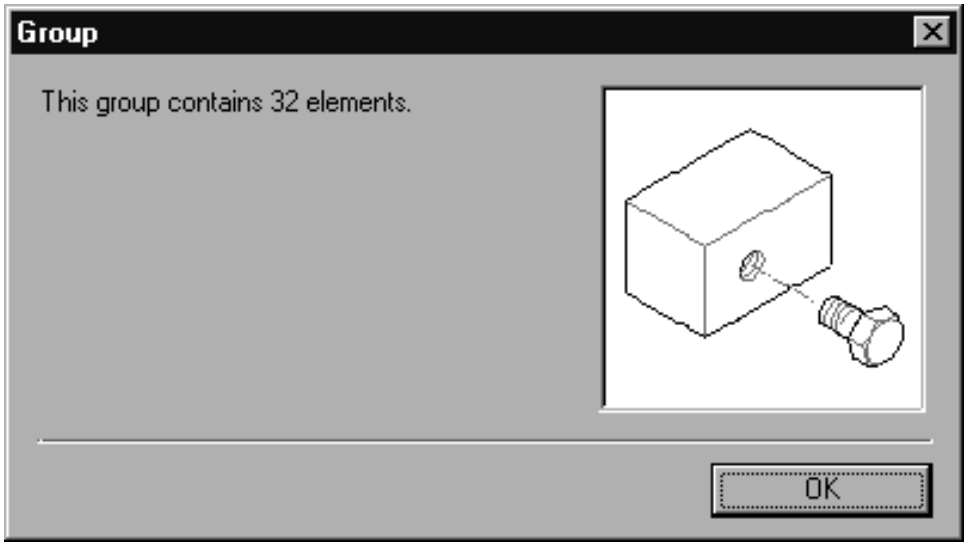

Dialog Box for Elements without their Own Element Info

Text elements do not have their own element info. In this case, you will see the following dialog box:

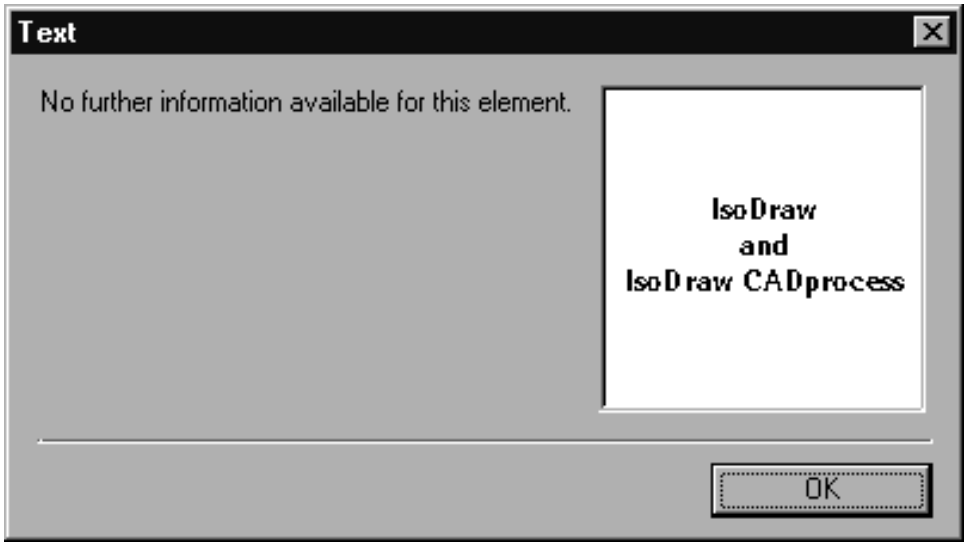

Arrange

Each element you create is allocated to the currently active layer. It is positioned in front of all other elements on this layer. The elements created first are always located at the back, with the more recent ones at the front. It is often the case that older elements are hidden either partially or completely by newer ones.

Use the four submenu commands to change the sequence of the elements within the layer. Use **Bring to front** and **Send to back** to move the selected element(s) - including groups - in front of or behind all the other elements in the layer, depending on the command chosen.

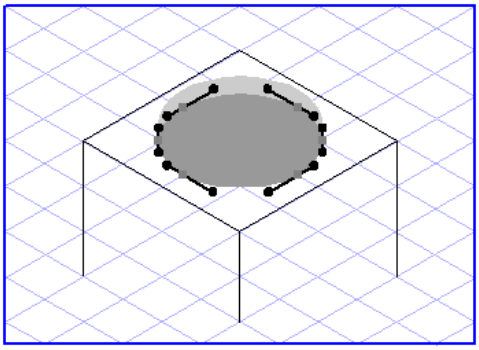

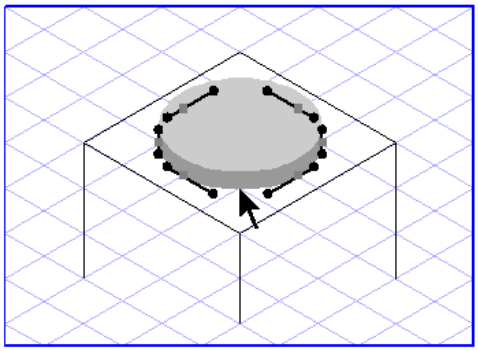

If you select **Bring forward** or **Send backward**, the selection will be positioned in front of or behind the next element of the layer, depending on the command chosen. You can scroll using these commands until the selected element is at the required position between the other elements. This is particularly useful where there are a number of overlapping elements.

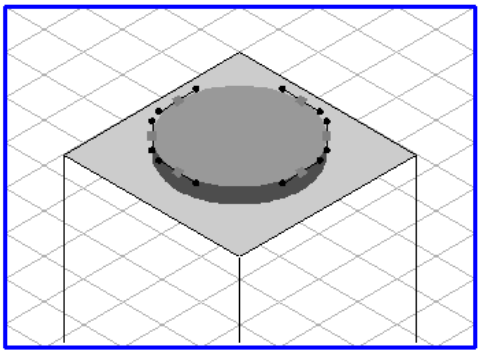

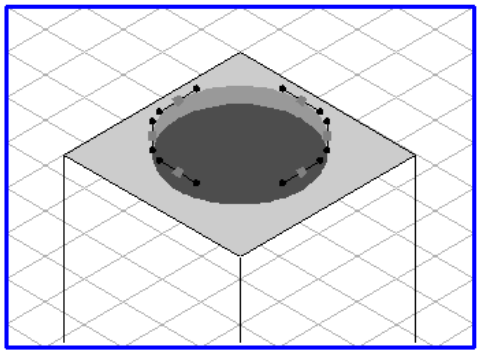

This repositioning procedure does not affect the assignment of the elements to their various layers. This naturally also applies if several elements belonging to different layers are repositioned relative to the other elements in a single operation. In each case, the sequence changes separately within the layers concerned.

Note

The position of the layers relative to each other influences the appearance of the drawing but is not changed by the commands. You can move entire layers with the commands in the ***Windows*** *menu using the* ***Layers*** *window.*

Convert

The commands available in submenu **Convert** allow you to convert elements into their component parts. The submenu offers three conversion options: **into elements**, **into Bézier parts**, or **into polylines**.

Convert into Elements

The command **Convert ▸ into elements** converts elements into their component parts. The element types that can be converted using this command are polylines, rectangles, inner threads, outer threads, polygons and callouts.

Select the element you want to convert and call up the command. You will now get a series of individual elements which initially are grouped together after conversion. If you ungroup these by selecting menu command **Ungroup**, you can then edit the individual elements. The descriptions of the relevant elements will tell you which individual elements will be obtained from the original elements.

This function can be useful, for example, if you want to remove part of a thread with the **Delete part** command. A thread cannot be edited in this form. Therefore it is necessary to convert it first into individual elements.

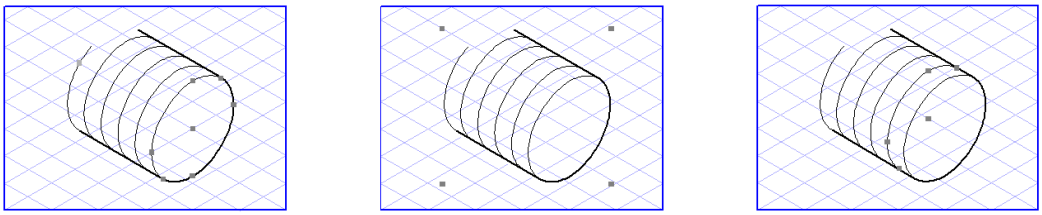

Note

Once you have converted an element you cannot restore it to its original state.

Convert into Bézier Parts

All elements can be broken down or converted into Bézier parts. Do this by selecting an element and then choosing **Convert ▸ into Bézier parts**. You will get elements consisting of Bézier paths.

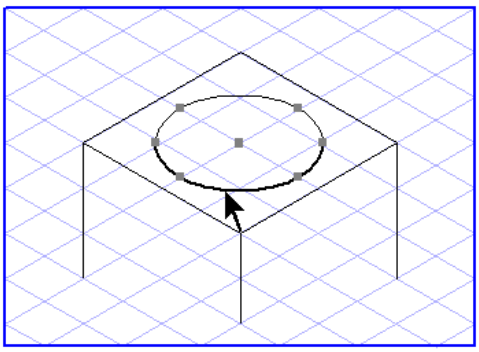

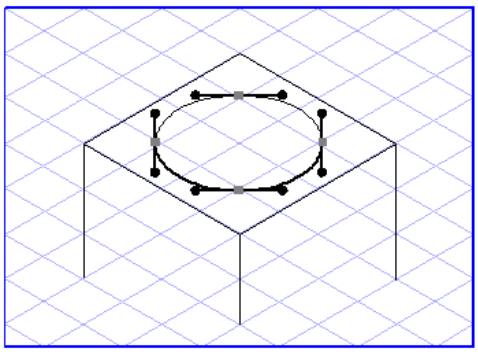

Convert into Polylines

You can also convert Bézier paths to polylines. Select one or more Bézier paths and then choose **Convert ▸ into polylines**.

A further dialog box appears before the conversion:

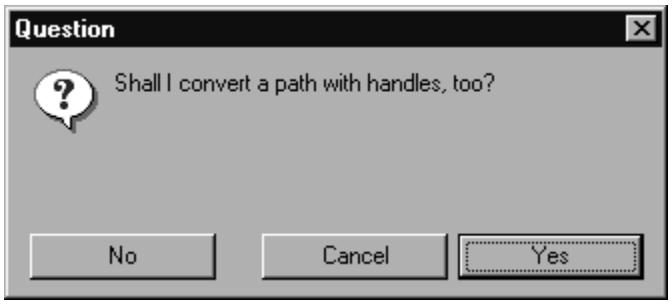

If you confirm with **Yes**, all Bézier paths will be converted to polylines. Any handle points are disregarded during the conversion.

If you click **No**, Bézier paths with handles will not be converted. Consequently, where several selected Bézier paths are converted simultaneously, only those Bézier paths containing no handles are converted to polylines.

The **Cancel** button allows you to exit the command without making any changes.

Note

*Additional conversion options exist for ellipses, inner threads and outer threads. The **Element info** dialog box lets you convert any element from this group into any other element of the same group. (See* *Element Info on page 155.**)*

Optimize

The problem which often occurs when importing CAD data is the poorly suited structure of the drawing for the illustration. Polylines are often used to represent circles, ellipses or curves. Polylines are adjoining line segments which are intended to approximate a curve. They are imported as polylines if they consist solely of straight segments. Otherwise, they are converted into Bézier paths. Elements of this type are naturally much more complex to edit than, for example, ellipses drawn in Arbortext IsoDraw . An additional disadvantage is the large volume of data involved.

For cases of this type, Arbortext IsoDraw offers five optimization functions which attempt to generate better elements from polylines.

The **Remove covered elements** command will help you reduce the size of the file.

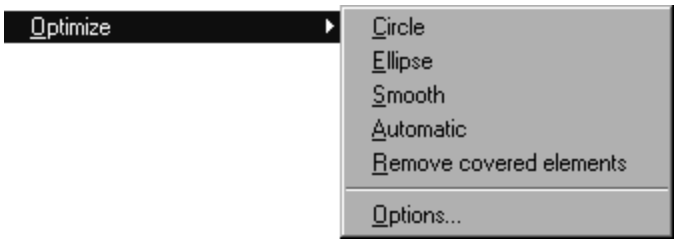

Circle

Select a polyline or a Bézier path which looks like a circle or part of a circle, then choose **Element ▸ Optimize ▸ Circle**. Arbortext IsoDraw now calculates whether all element points of the selected element lie close enough to an arc. If this is the case, the circle is generated. Several polylines or Bézier paths can also be optimized simultaneously. After optimization has been performed, the old elements lie grouped in front of the circles. Check that the contours of the new circles lie precisely enough on the old elements. Delete the group if they do. Only the circles then remain on the illustration.

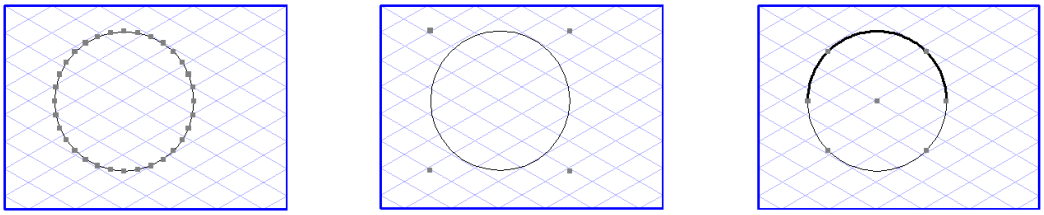

Ellipse

The **Ellipse** variant functions in a similar way to the circle optimization. In this case, of course, ellipse-shaped polylines or Bézier paths need to be selected before you call up the command.

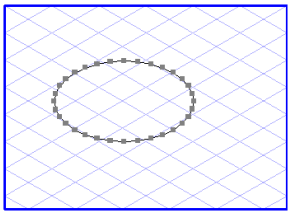
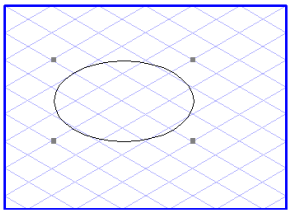
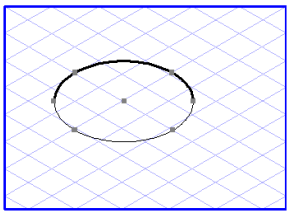

Note

Optimization to an ellipse can only be performed if the selected polylines or Bézier paths are closed.

Smooth

The smoothing function is applied to polylines or Bézier paths which cannot be converted to circles or ellipses. First select the polylines or Bézier paths, then choose **Element** ▸ **Optimize** ▸ **Smooth**. For each selected element, Arbortext IsoDraw now calculates a curve which approximates the element as smoothly as possible and uses the fewest number of points. Here, too, the old elements are grouped together in front of the newly generated Bézier curves.

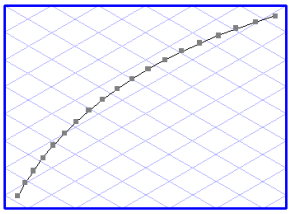
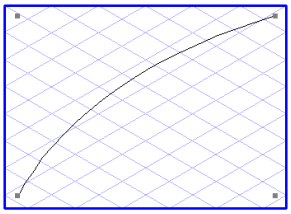
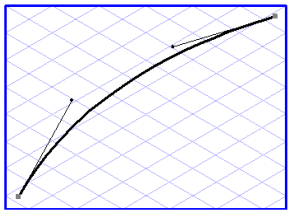

Options (for Smoothing)

Use the **Options** command in the submenu to specify how strongly the elements are to be smoothed. The default tolerance is `0.1` mm. If you select a larger value, the smoothing function is more vigorous. With a smaller value, a smoothing function takes place which is more precise and in line with the contour flow. The tolerance value specifies how far the smoothed curve may be from the original polyline.

Enter the required value. If you click **Reset**, the default value is restored.

The **Cancel** button allows you to exit the command without making any changes. If you confirm your entry with **OK**, the value will be used for the smoothing function.

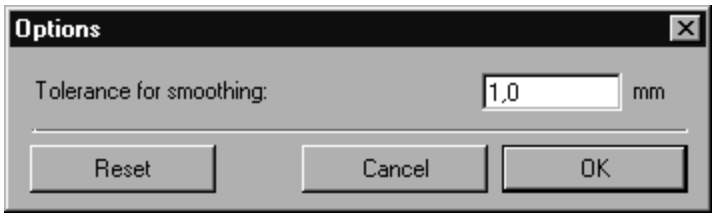

Note

The smoothing function employs an approximation procedure for the calculation. The result may therefore not agree with your expectations, especially for rough smoothness tolerance values. Sharp corners in the curve profile may be quite desirable, they may nevertheless be smoothed out. Remember: The lower the value you select for the tolerance, the more elements the drawing will contain. Typical values lie in the range `0.5` *mm to* `0.01` *mm /* `0.02` *to* `0.001` *inches.*

Automatic

The fourth function in the **Optimize** submenu attempts to generate enhanced results from selected polylines or Bézier paths by repeated optimization. The following successive steps are performed:

Firstly, successive checks are made to determine whether circles, parts of circles or ellipses can be generated from the selected elements. The remaining polylines are then smoothed.

Delete Covered Elements

The last function in the **Optimize** submenu deletes elements which are covered by filled areas and are therefore hidden. This is the case, for example, if you use white areas to cover specific parts of an illustration.

Select the filled elements hiding the elements you want to delete. Select all the elements if you want to optimize the entire illustration. If you now apply the **Remove covered elements** command, all the elements are checked to determine whether they are covered in full or in part by one of the selected areas. If this is the case, the element will be deleted either entirely or in part.

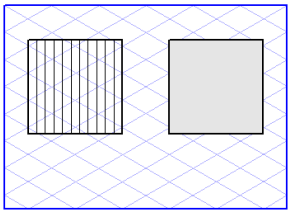

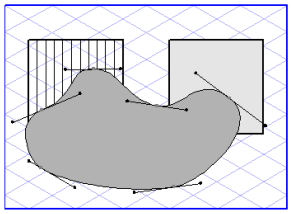

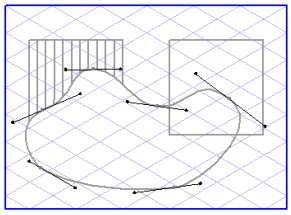

This is not the case with elements which have been locked or are located on locked layers. The procedure is different for elements which themselves are filled. These are only deleted if they are covered completely (see graphic at bottom right of preceding page).

Note

Before applying the function, you should save the file under a new name, since Arbortext IsoDraw will be unable to reconstruct the deleted areas of your illustration afterwards.

Paths

In the **Paths** submenu, you will find four commands. Using the commands **Join polylines** and **Join Béziers**, you can join several polylines or Bézier paths to form a single path. The **Generate contour** command generates an outer contour from selected elements. The **Create compound path** command allows you to punch holes in filled areas.

Join Polylines

This command allows you to combine several lines or polylines to a single line. Various starting scenarios are possible:

1. You want to join two lines to create a single polyline which is not closed. To do this, use the arrow cursor to click first one end of one line and then one end of the other line. The two points will appear selected (in the second selection color in color mode, in black on a monochrome screen). The two lines are

interlinked automatically at these two end points when you choose **Element ▸ Paths ▸ Join polylines**.

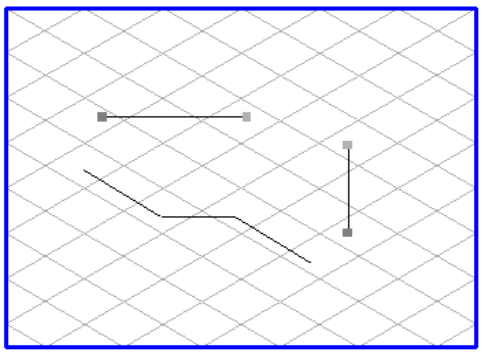

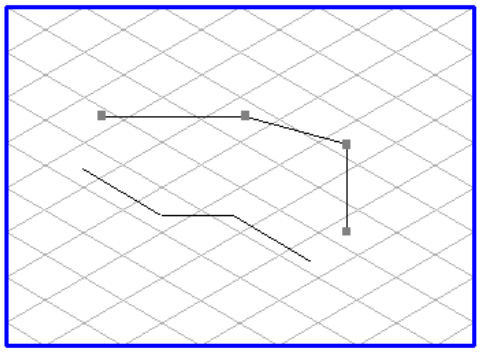

2. You want to join two or more lines to produce a single line path which is closed. To do this, select the required lines and choose **Element ▸ Paths ▸ Join polylines**.

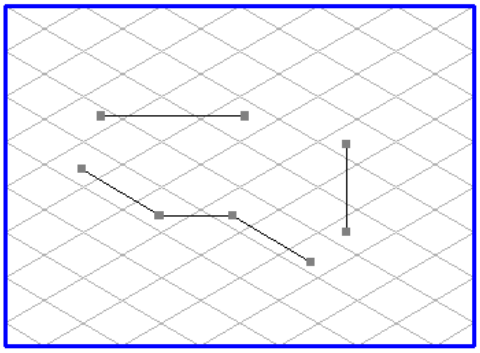

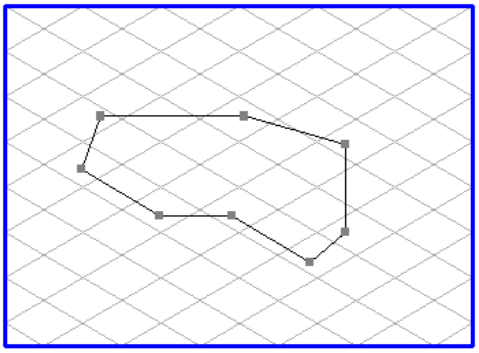

If you click **OK** in the dialog box which then appears you will generate a closed line path.

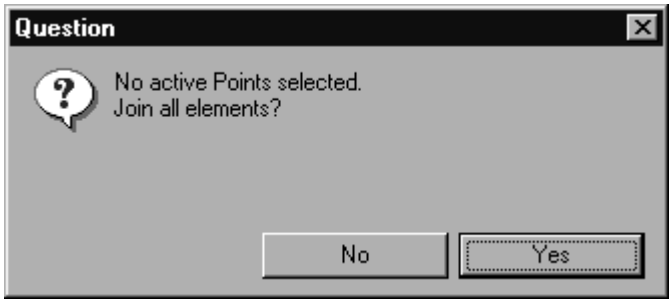

Note

It is advisable when joining several lines to apply the procedure set out under 1. several times in succession. Only then can you unambiguously determine which ends are joined to each other.

The new elements produced by connecting lines are always assigned to the layer which is currently active.

Bézier paths are not taken into account when a line path is being created.

Join Béziers

This command lets you combine several Bézier paths to form a single path. Various starting scenarios are possible:

1. You want to join two Bézier curves to create a single Bézier path which is not closed. To do this, use the arrow cursor to click first one end of one Bézier curve and then one end of the other Bézier curve. The two points will appear selected (in the second selection color in color mode, in black on a monochrome screen). The two curves are interlinked automatically at these two end points when you choose **Element ▸ Paths ▸ Join Béziers**.

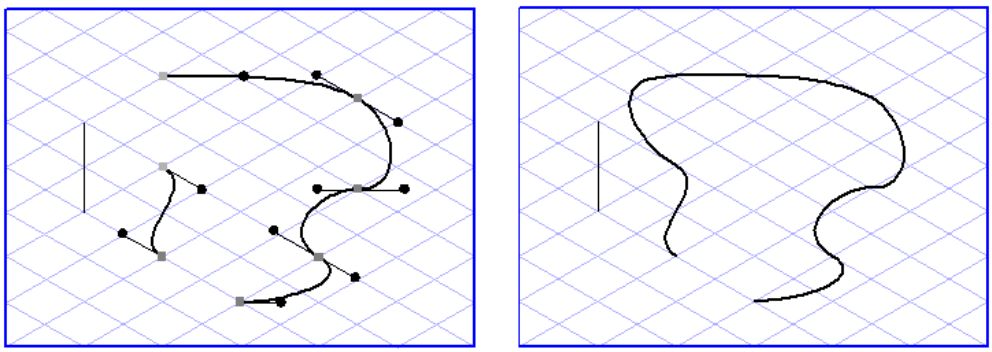

2. You want to join two or more Bézier curves to produce a single Bézier path which is closed. To do this, select the required Bézier curves and choose menu command **Element ▸ Paths ▸ Join Béziers**.

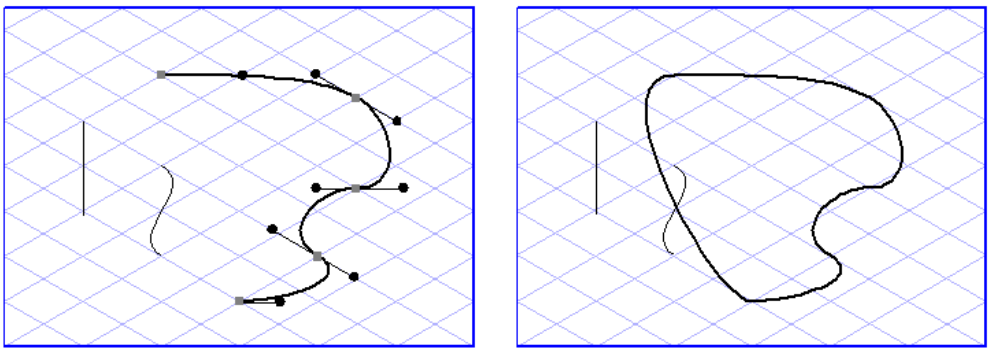

If you click **OK** in the dialog box which then appears you will generate a closed Bézier path.

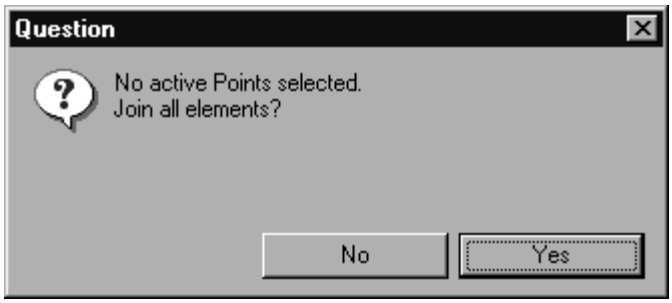

Note

It is advisable when joining several Bézier curves to apply the procedure set out under 1. several times in succession. Only then can you unambiguously determine which ends are joined to each other.

3. You have (also) selected elements which are not Bézier paths. After choosing menu command **Join Béziers** you will be reminded that no points of a Bézier path have been selected.

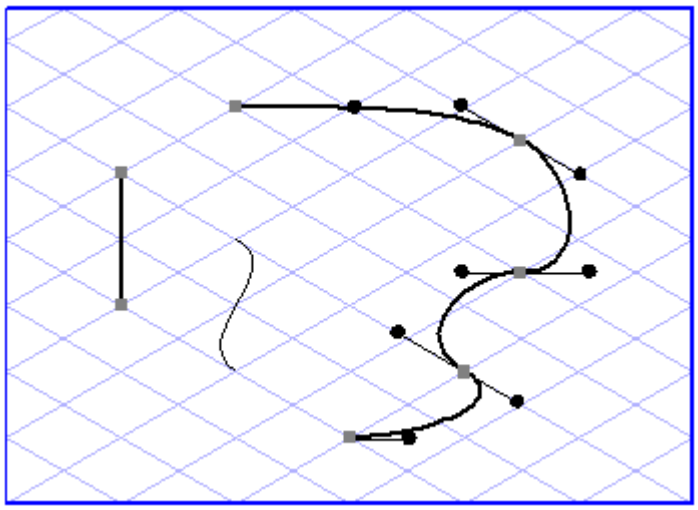

If you want to have a closed Bézier path as the outcome, click button **OK**. A new dialog box will appear which will ask you whether you want to convert the selected elements into Bézier paths.

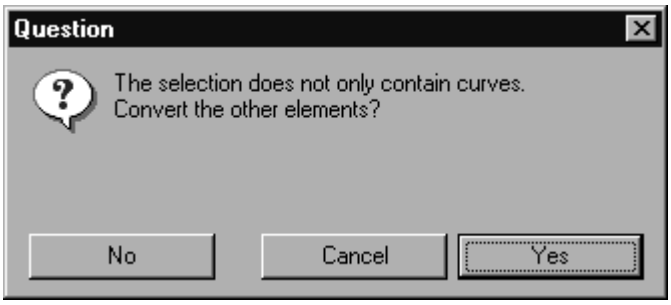

If you confirm here with **Yes**, all elements affected are converted to Bézier curves. An attempt is then made to close the curves. Several closed paths may result depending on the form of the individual elements.

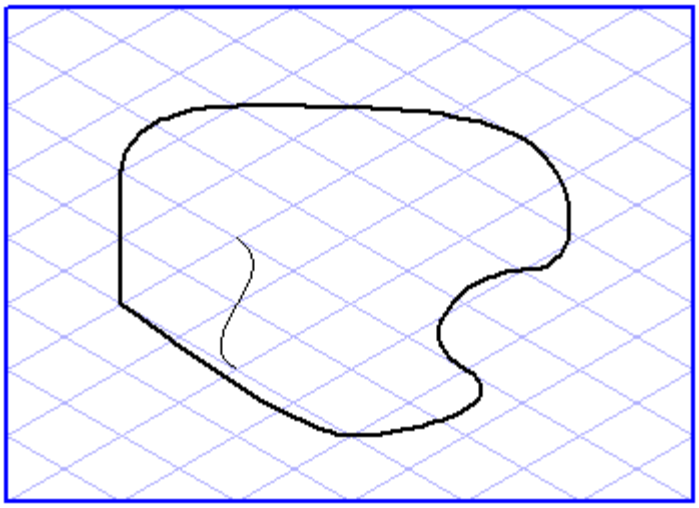

If you click **No**, only the selected Bézier parts are joined. The non-Bézier elements remain unaffected. Several closed paths can also result here.

The **Cancel** button allows you to exit the command without making any changes.

Note

The new elements produced by connecting Bézier paths are always assigned to the layer which is currently active.

Generate Contour

This command lets you generate the outer contour for selected elements. The result is a Bézier path which forms the boundary of the area enclosed by the elements.

The contour can only be located if the selected elements enclose an area. The following examples show the elements and the resulting areas:

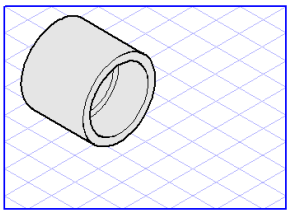
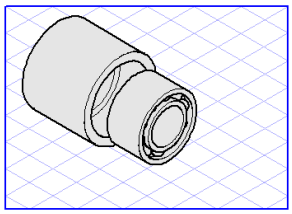
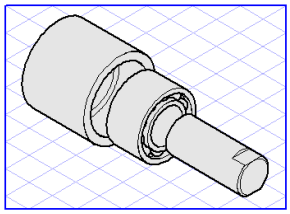

The illustrations which follow show typical cases where the contour cannot be located.

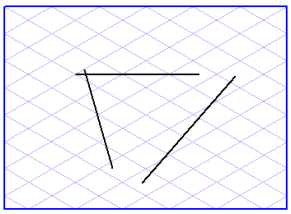
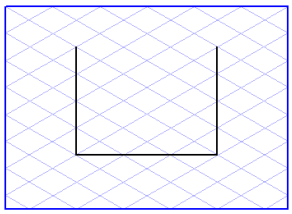
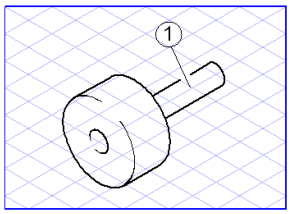

To generate a contour, select the required elements, then choose **Element ▸ Paths ▸ Generate contour**. Arbortext IsoDraw automatically generates the outer contour as a Bézier path. If a fill has been chosen, the path will be displayed with this fill. The path lies in front of the selected elements. To display the lines of the original elements, move the contour path into the background using **Element ▸ Arrange ▸ Send to back**.

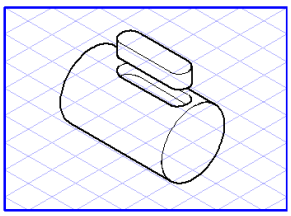
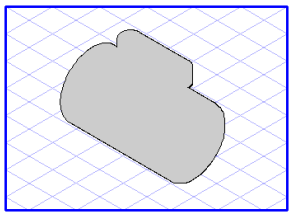
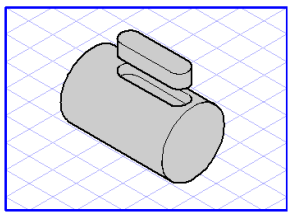

The located outer contour is ideal for isolating a group of elements against the background. Fill the contour with the color white and position it behind the elements in the group. Now group the contour and the elements lying in front of it. You can now place the group in front of other elements in your illustration without these being visible.

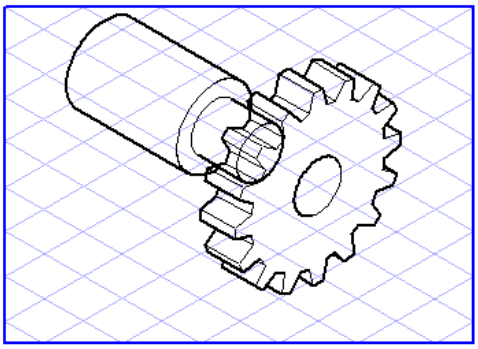

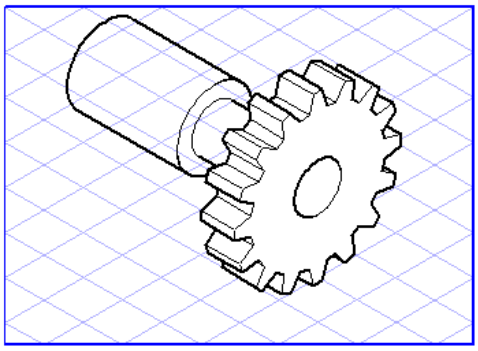

You often may not want the lines of other objects in your illustration to extend right up to the lines of the group you want to isolate against the background. In this case, create a new pen of color white and approximate thickness 2 mm. Assign this pen to the outer contour. The two graphics show how this pen covers elements behind it.

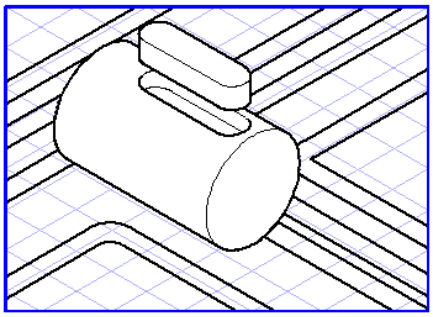

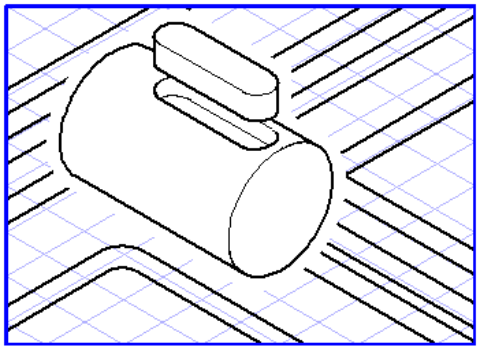

Create Compound Path

Use this command to punch holes in filled areas. All starting elements are converted into a single Bézier path which describes the entire filled area.

Select a filled element and one or several smaller elements which lie in the filled area. It must be possible to fill these elements, i.e. they must be able to have their own fill. Then select the command from the menu.

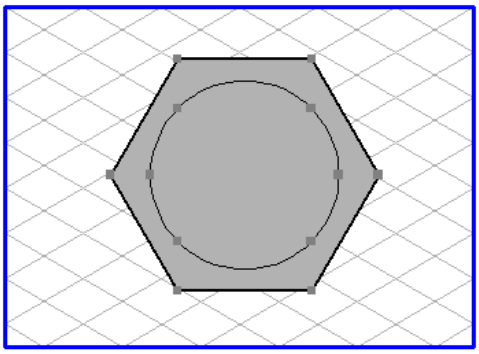

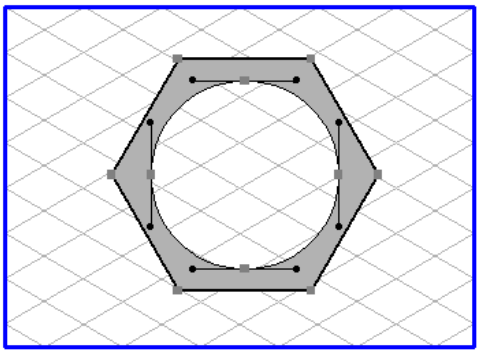

The filled area now consists of a Bézier path which encloses all contours. By connecting the interior contours with the external contour, the holes are produced.

Advanced Tools

In the **Element ▸ Advanced tools** submenu, Arbortext IsoDraw provides two special tools which facilitate completely new ways of working. The displayed solids have a depth until they are finished; you are therefore no longer working only in 2D planes.

Using **Advanced tools ▸ Shaft tool**, you can create complex shafts and gear parts easily and quickly. The drawing is made up of segments, or drawing sections. Each segment has a depth and should therefore be regarded as a solid during creation. The form of each shaft segment can be selected directly. There are different variations available as segments, such as gear wheel or key. This means that you can put the drawing together segment by segment. All dimensions can be inspected and changed in entry fields at any time.

Using **Advanced tools ▸ Extrusion tool** automatically generates a 3D body from a 2D view. Using the 3D transformation function, the display can be changed like a 3D object. While you are working with the tool on the drawing, you can make as many changes as you like and use the 3D transformation function. This tool enables profile types, e.g. from a 2D CAD file, to be converted very easily into perspective solid views.

Shaft Tool

If you select the **Shaft tool** command in the submenu, a dialog box appears.

At the top of the window, you will find information on the shaft. At the bottom, you can select the form of the shaft segments in the pop-up menu. The dimensions which can be modified appear next to the pop-up menu, depending on your selection.

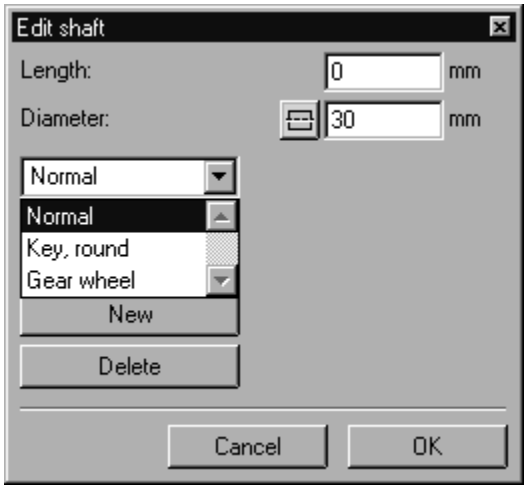

Click on **Cancel** to leave the dialog box. All drawn segments will be lost. A click on **OK** finishes the work with the **Shaft tool**. The drawing now consists of the typical 2D elements in Arbortext IsoDraw . The **Thick** and **Thin** pens are automatically assigned to the inner and outer edges. After leaving the dialog you can no longer modify this drawing with the **Shaft tool**.

Starting the Drawing

You have chosen **Element** ▸ **Advanced tools** ▸ **Shaft tool**. The cursor changes into a **Drawing** cursor. Drag an ellipse. This ellipse is the starting element for your drawing.

Note

Since the angle and the size of the ellipse cannot be changed subsequently, make sure you consider the orientation of the drawing and which diameter the shaft is to start with.

You will now see an ellipse on the drawing sheet with three dragging points. The outer points are used to change the diameter. By dragging the dragging point in the center, you can give the segment depth.

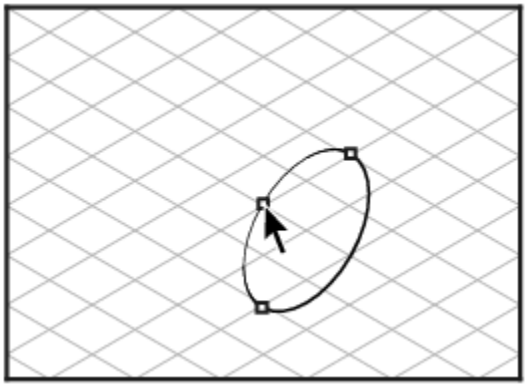

Use Shaft Tool to Create Drawing from Segments

Each ellipse with its three dragging points represents a shaft segment. You can change the diameter and drag the ellipse perspectively into a solid (segment). When you click on the button next to the entry field for the diameter, the diameter of the ellipse is reset to that of the last segment. When you click on **New**, the work on the segment is complete. The **Delete** button deletes the most recently created segment. Every time the button is clicked a further segment is deleted.

The variation of the segment can be selected from the pop-up menu. As long as the segment is active, you can change the dimensions as much as you like. Most of the segment's dimensions can be changed directly via the dragging points. These and all other dimension changes can be entered in the entry fields. On the active segment, you also have the option of changing from one variation to another.

If you have clicked on **New**, the ellipse with the dragging points becomes a new shaft segment.

On the next few pages, you will find the variations.

Using the technical drawing, you will see easily which letters belong to which dimensions in the associated entry field.

Shaft Segment – Standard, as a Shaft End

You have selected the **Shaft tool**. Drag an ellipse of diameter 20 mm. The first shaft segment has a diameter of 20 mm, as can be seen in the entry box next to **Diameter**. Click on the central dragging point. The drawing cursor turns into an arrow tip . Holding down the mouse button, drag the mouse over the drawing

area. The segment is dragged. At the same time, a dynamic dimension display appears and the **Length** value in the shaft entry field changes. Release the mouse once the dimension is shown as 30 mm. The **Standard** shaft segment is finished.

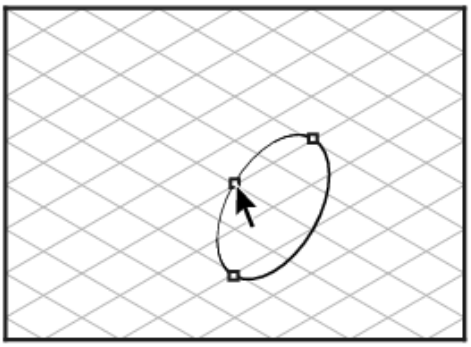

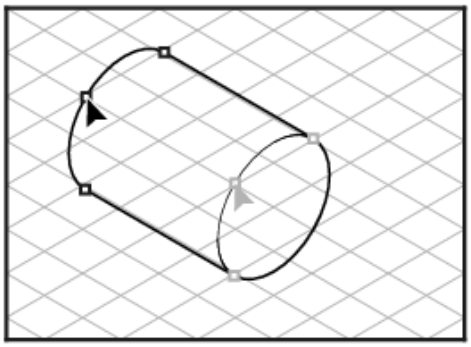

If you wish to draw a shaft end, drag the central dragging point to e.g. 10 mm and change the diameter to 30 mm using one of the external points. The connection lines between the ellipses run obliquely. The end of the shaft is finished. Click **New** to start a new segment.

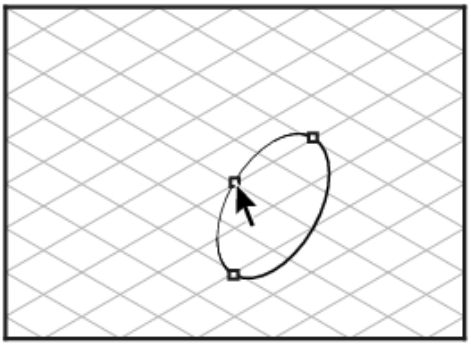

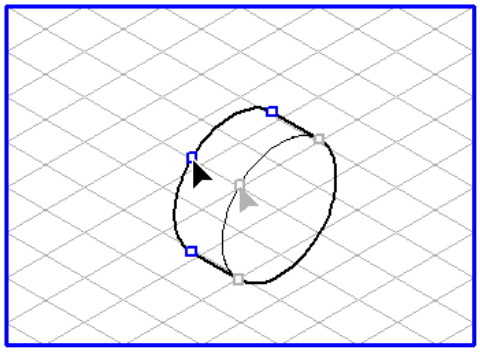

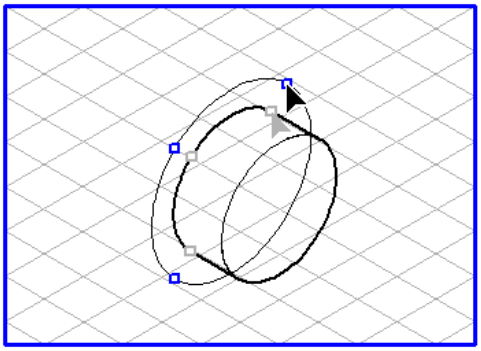

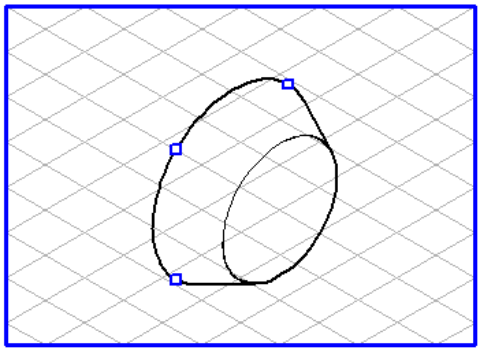

Shaft Segment – Key, Round

You have selected the **Shaft tool** and drawn an ellipse of diameter 30 mm. Drag the segment from the central dragging point to 40 mm. Select **Key, round** from the pop-up menu. A keyway with several dragging points appears on the shaft segment. The center of the keyway lies laterally at 45°. The angle depends on the perspective plane of the ellipse. At the same time, the entry fields with the changeable dimensions for the **Key, round** variation appear.

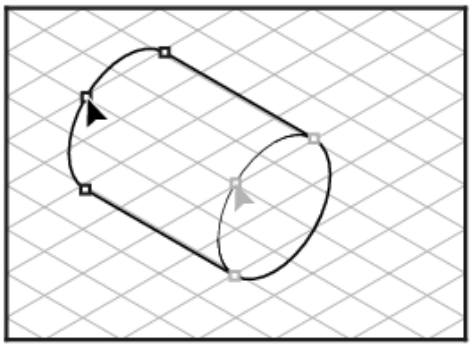

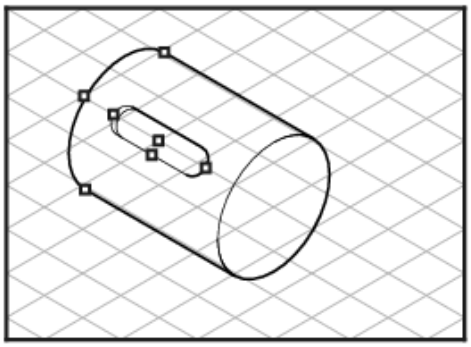

The changeable dimensions of the keyway are shown in the front plane drawing.

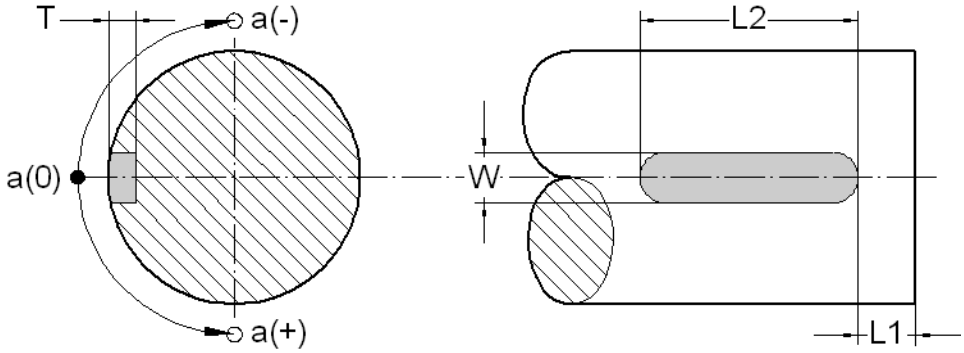

Dimension **L1** gives the start of the keyway in relation to the starting ellipse.

Dimension **L2** gives the total length of the keyway.

The width of the keyway is determined by dimension **W**.

The depth of the keyway can be changed in the entry field for dimension **T**.

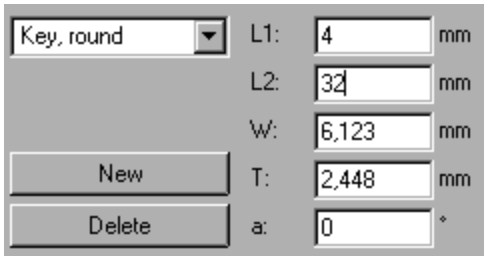

Use the angle **a** to rotate the keyway around the circumference of the shaft segment. If you enter a positive value, the keyway will rotate counterclockwise, while a negative value will rotate the keyway in clockwise direction. The effect of your angle entry depends on the major axis on which you have created your drawing. The effect of your angle entry depends on the major axis on which you have created your drawing.

Except for the keyway depth **T**, you can also change all dimensions using the dragging points. To do this, click on a dragging point. The drawing cursor turns into an arrow tip . Holding down the mouse button, drag the mouse over the drawing area. Once you have reached the desired position, release the mouse button. While you are moving the dragging point, the current dimension is shown in the associated entry field. Use the foremost dragging point on the keyway to change the keyway's starting position (**L1**). If you move the point, you will see a dynamic auxiliary ellipse. Using the rearmost dragging point, you can change the total length of the keyway (**L2**). Here too, a dynamic auxiliary ellipse accompanies the movement.

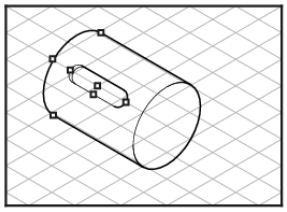
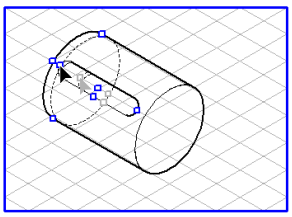
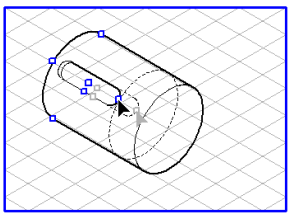

If you drag from the central point, you will see a line representing the angle of rotation, alongside an angle value. The angle value initially shows 0 and lies at 45°. Use the handle on the outer edge of the keyway to change the keyway's width (**W**).

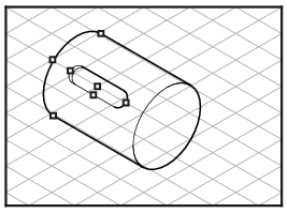
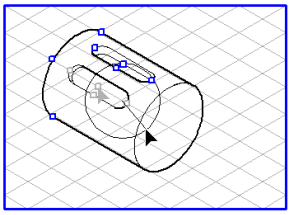
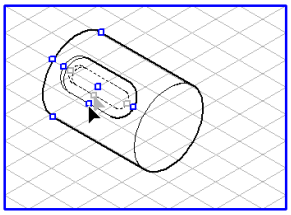

Shaft Segment – Gear Wheel

You have selected the **Shaft tool** and drawn an ellipse of diameter 30 mm. Drag the segment by the central point to 40 mm. Select **Gear wheel** from the pop-up menu. The shaft segment turns into a gear wheel. At the same time, the entry fields for the changeable dimensions of the **Gear wheel** variation appear.

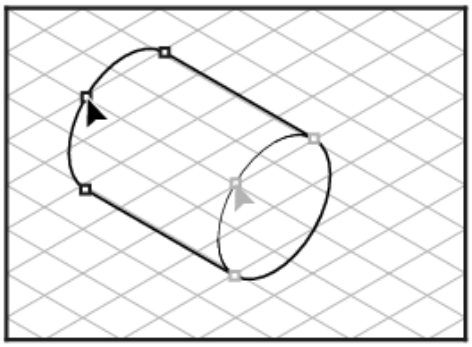

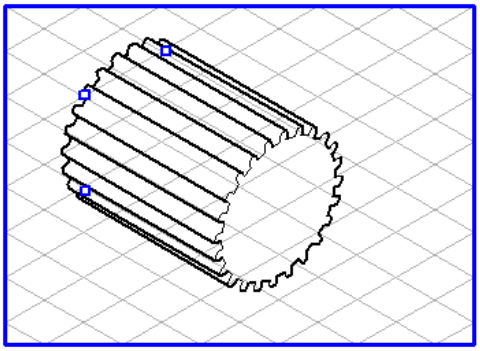

The changeable dimensions of the gear wheel are shown in the first front plane view. In both other drawings, the effect of the angle **a** is displayed symbolically.

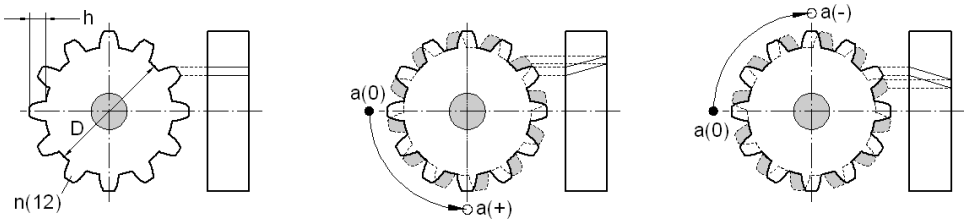

Dimension **D** specifies the root circle on the gear wheel. This diameter corresponds to that of the shaft segment.

Dimension **D** specifies the root circle on the gear wheel. This diameter corresponds to that of the shaft segment.

The entry in the entry field next to **n** specifies the number of teeth at the circumference.

Dimension **h** specifies the height of the teeth (2 X h + D = outer diameter of the gear wheel).

The value at **a** specifies by how many degrees the rear gear wheel is rotated in relation to the front gear wheel. This corresponds to the angle of inclination for helical gear wheels. If you enter a positive value, the rear gear wheel is rotated

counter-clockwise. This gives a helical gear wheel with counter-clockwise twist. If you enter a negative value, the rear gear wheel rotates clockwise. This gives a helical gear wheel with clockwise twist.

The first example shows a helical gear wheel with counter-clockwise twist, the second a helical gear wheel with clockwise twist.

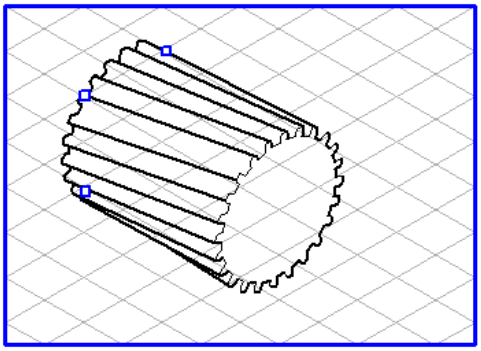

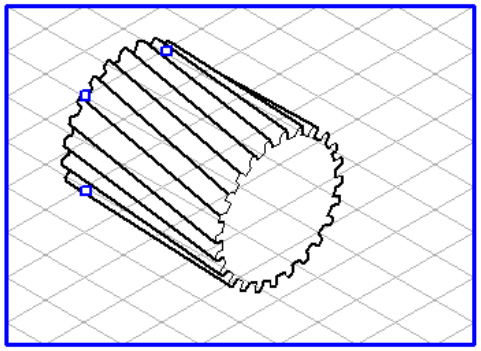

For the **gear wheel** shaft segment, all the dimensions are changed in the entry fields. On the drawing, you will only find the handles familiar from the **Standard** shaft segment for the diameter and the length of the shaft segment.

Extrusion Tool

The **Extrusion tool** automatically generates a 3D solid from a 2D view. You can then change the extent and use the command **3D Transformation** to select any perspective you like for the solid. The tool is ideal for profile-type solids, which exhibit the same contour over their entire length.

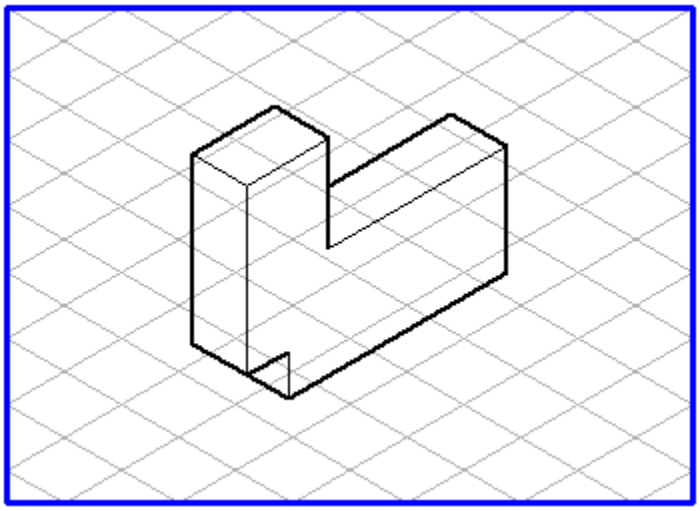

With this tool, all elements in the 2D view have the same depth.

Generation

Select all elements in the 2D view that you wish to convert into a solid.

Select the command **Extrusion tool** in the pop-up menu. The view appears with a depth as the solid on the Z-axis of the current grid. The solid is displayed hollow. Using the two handles front and back, you can change the depth of the solid. If you zoom in closer, you will see that the edges of the solid are shown in the correct distribution of inner and outer edges using thick/thin lines. It does not matter which pens were assigned to the 2D view before editing.

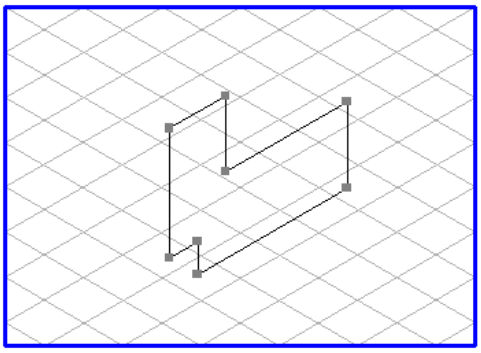

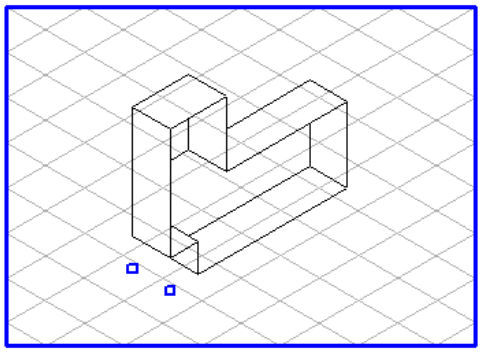

If you wish to change the length of the solid to the rear, click on the rear move point. The drawing cursor turns into an arrow tip . Holding down the mouse button, drag the mouse over the drawing area. The length of the solid changes depending on the direction in which you move the mouse. The solid becomes longer or shorter. The area with the front move point does not change orientation. You can use the front move point to change the length of the solid in the same way. The area with the rear move point does not change orientation.

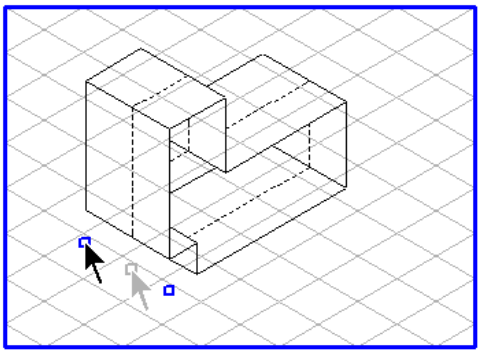

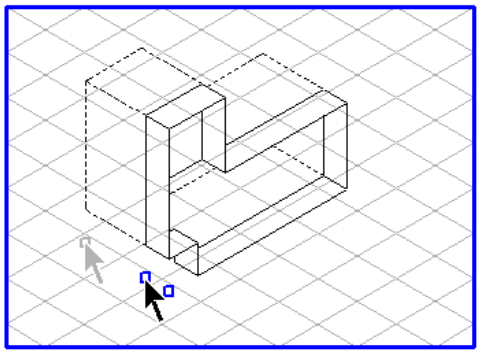

If you hold down the SHIFT key and click the free drawing area with your mouse, the following dialog box appears:

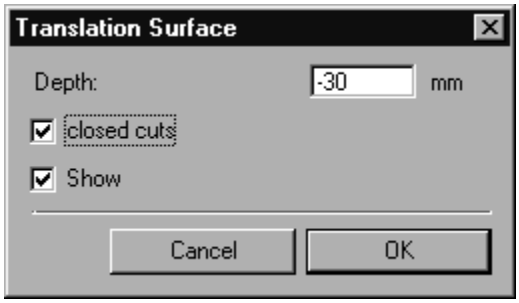

Here, you can change the settings. If the **Show** box is checked, each change will be applied immediately so that you can check the effect of the change.

The **Depth** field displays the current value of the solid's depth. Negative values appear if the solid has been dragged backwards. Positive values appear if it has been dragged forwards. You can subsequently change the value for the solid's depth in the entry field and by using the handles, provided that the **Extrusion tool** is active.

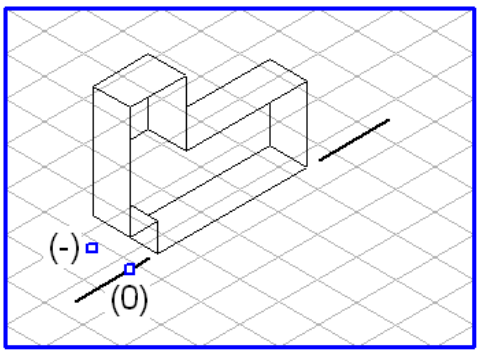

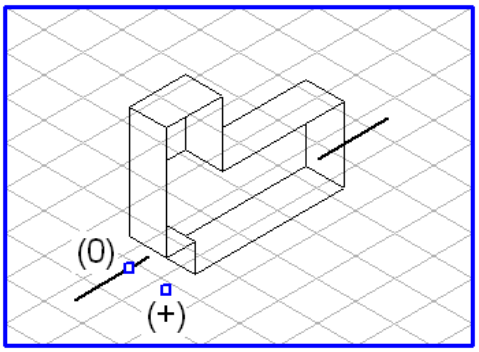

If you check the **Closed cuts** box, all covered corners on the solid are hidden. Provided the **Extrusion tool** is active, you can undo the **Closed cuts** option at any time. After the projection has been completed, the option last selected will be displayed. If the depth value is positive, the solid will only be closed at the rear end.

The entries will be applied if you click **OK**. Click **Cancel** if you wish to use the settings which were in use before the dialog box was opened.

Changing the Perspective in 3D Mode

As long as work with the **Extrusion tool** has not been concluded, it is possible to switch to **3D mode** and use the tools and menu commands that are available in 3D mode. Descriptions of the 3D-mode functions can be found in 3D Transformation on page 193.

Select menu command **3D transformation** in the **Element** menu. The body appears in 3D mode on the three axes of the coordinate system.

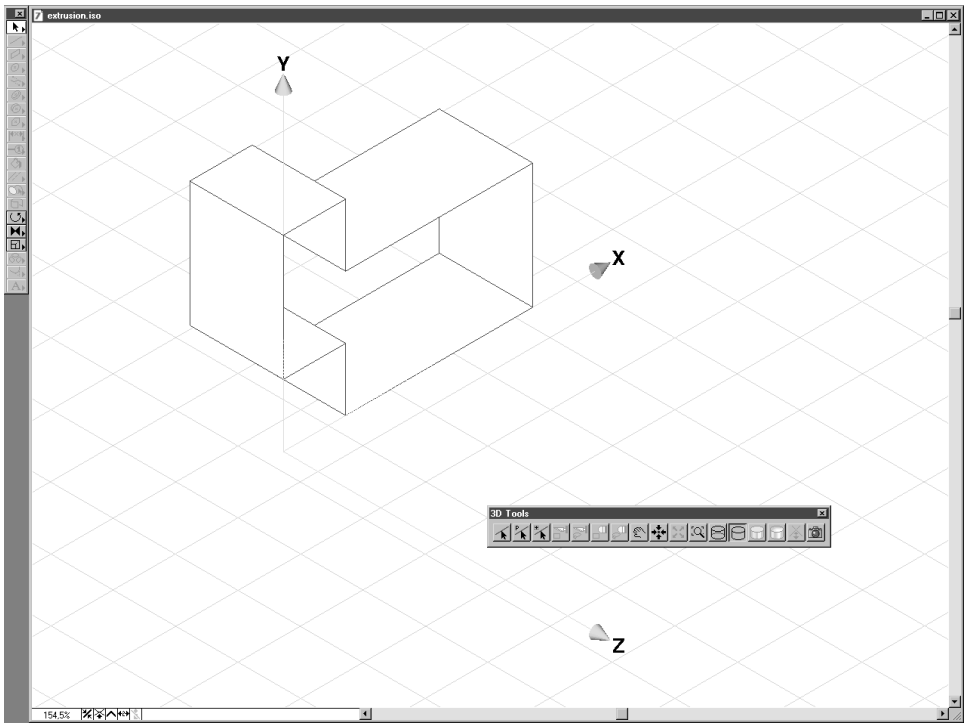

If you have completed the change and wish to go back to using the **Extrusion tool**, press the **Camera** button.

Note

You can then continue to perform any changes and also return to 3D mode before exiting the projection.

Quitting the Projection

Click an empty part of the drawing area. The following dialog box appears:

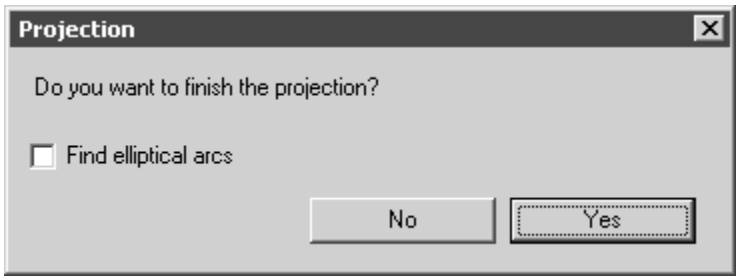

If you click the box next to **Find elliptical arcs**, all Bézier paths with an elliptical form appear as segments of an ellipse.

Note

If you want to add to a drawing of a rotational body, you should select this option. Working with elliptical elements is easier and more precise.

Clicking **No** lets you quit this dialog box and continue editing the projection.

Clicking **Yes** terminates the projection process. The elements are then projected into their final positions.

Find Ellipse

This command allows you to generate the ellipses which match a plane and an angle in this plane.

Select an ellipse or ellipse segment in the original plane and also select a line pointing in the direction of the required minor axis (smallest diameter of an ellipse). Then select the command. Enter the desired diameter in the dialog box which appears.

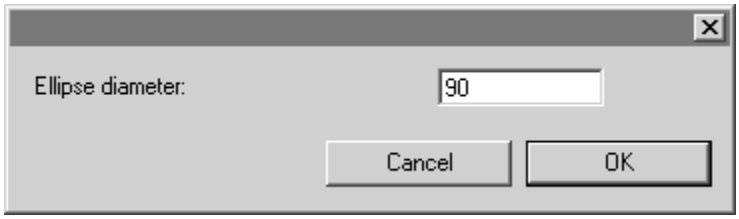

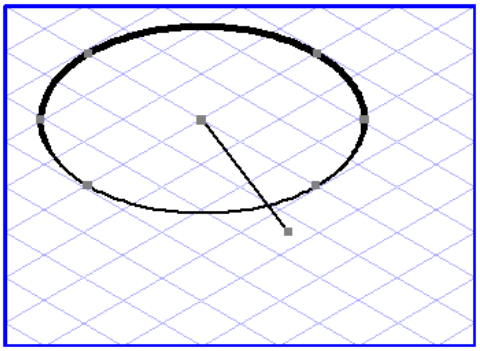

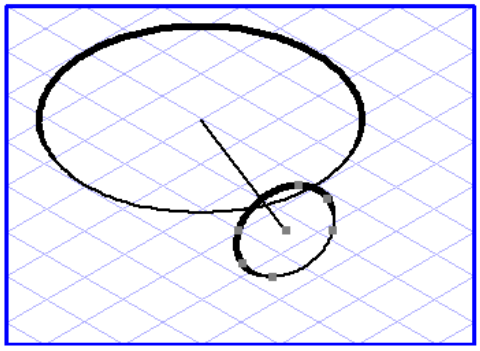

Holding down the SHIFT key when selecting the menu command in this situation will generate an ellipse lying perpendicular to the direction specified by the line. At the same time, short line segments appear which are set at a right angle to the starting line.

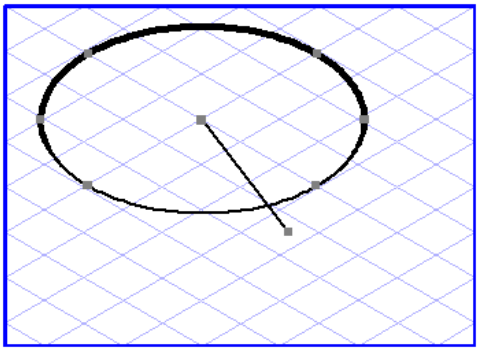

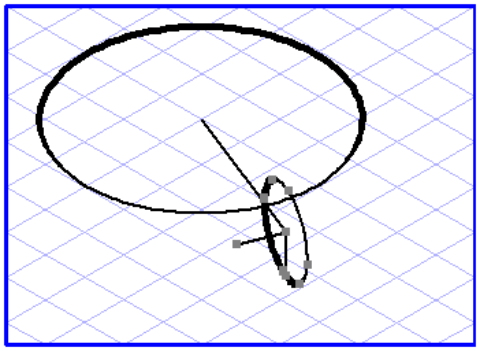

A third option is also available to you. If you select the command while holding down the ALT key, three ellipses and two line segments will be generated. The line segments indicate the right angle suitable for the starting line, while the ellipses are the precise ellipses for these angles.

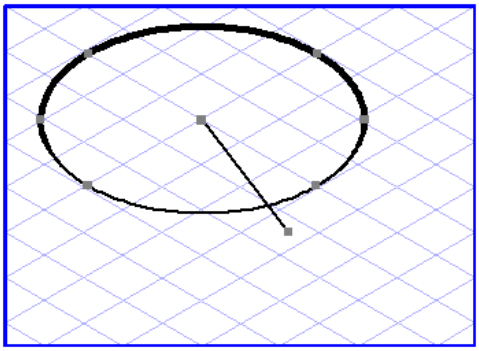

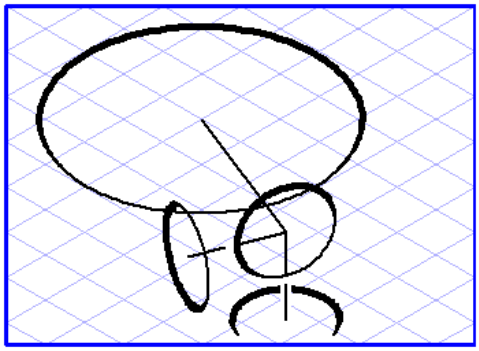

The ellipses in the illustration have been moved so as to show their relationship with the axes more clearly.

The newly generated elements such as ellipses and line segments are assigned to the layer which is currently active.

Note

The rules used for specifying ellipses are defined by the geometric relationships in the parallel perspective. However, the ***Find Ellipse*** *function can also be applied when you are working with other perspectives, e.g. when tracing photographs. While a photograph uses the central perspective, the various items depicted generally lie so close together that the automatically generated ellipses can be tolerated.*

The command **Element ▸ Find Ellipse** allows you to immediately generate virtually all the ellipses you require for drawing in parallel perspectives. The following examples show typical situations in which ellipses have to be found. For greater clarity, the original ellipse and the line creating the angle are shown in dark gray while the resulting ellipses and axis segments appear in light gray. The button used for the created ellipse can be seen next to the figures.

Find Ellipse or F11	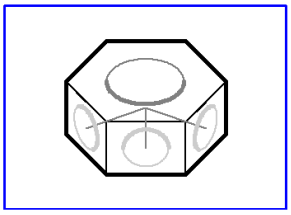	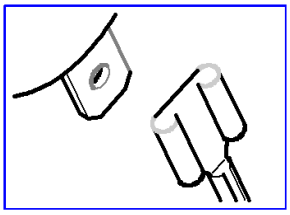
SHIFT+**Find Ellipse**	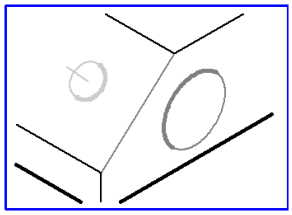	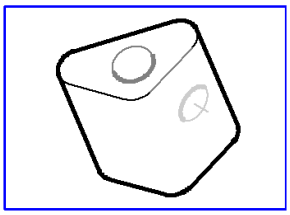
ALT+**Find Ellipse**	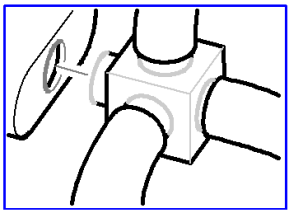	

Close Ellipse

You can use this command to turn ellipse segments back into complete ellipses.

The complete ellipse once again has the line thicknesses characteristic of a new ellipse.

Select the ellipse segments and then call up the command.

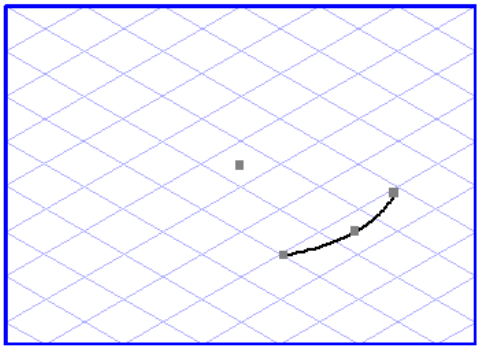

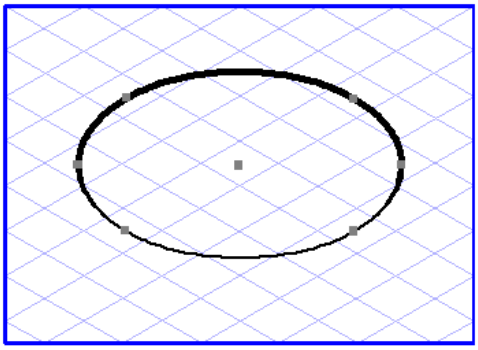

Group

You can combine as many elements as you like into a group.

Select the elements you want to include in the group by holding down the SHIFT key while you click the elements one by one or use the selection rectangle. Then select the command.

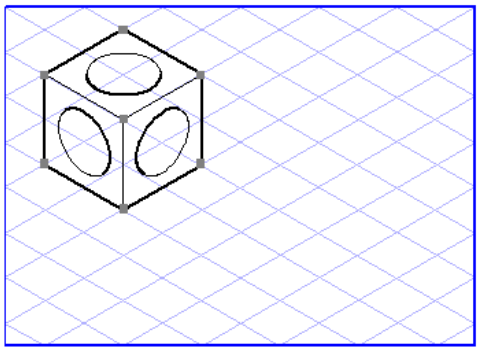

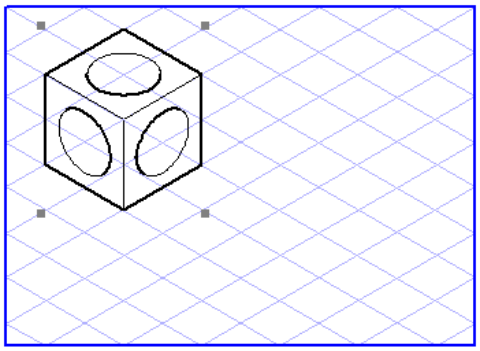

Arbortext IsoDraw treats groups as a single unit. As soon as you select an element of the group, the entire group will be activated and can thus, for example, be moved en bloc.

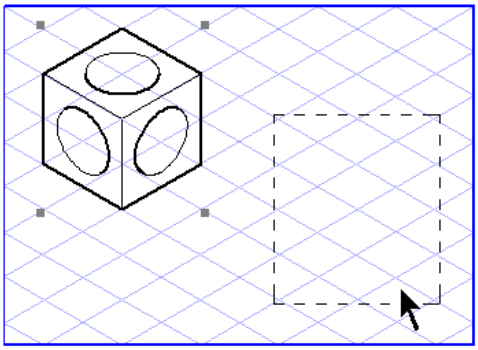

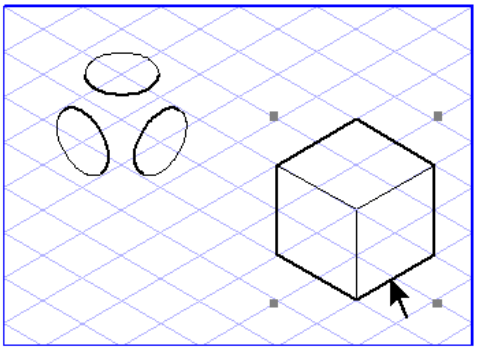

Groups can also be combined with other elements or groups to form new groups.

Note

When created, a group is always assigned to the layer which is currently active.

Ungroup

The menu command **Ungroup** is the opposite of the **Group** command.

A number of elements or groups which have been combined into a single group are treated as a single element. However, if you later want to edit individual elements of this group, the group must first be ungrouped.

To do this, select the group in question and call up the command. The elements contained in the group can then be accessed individually.

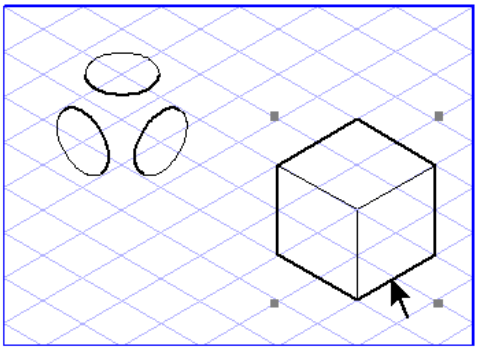

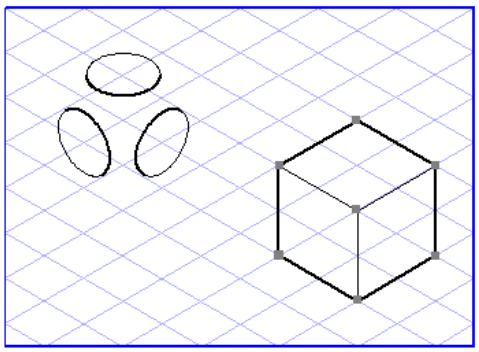

Note

Ungroup *releases only the last grouping level. If a group which is to be ungrouped contains other nested groups, these will be retained.*

When ungrouping a group note that any existing Object info will be lost. If you only want to change elements in a group, you do not need to ungroup them first. You can select an element from a group using the ***Direct selection*** *tool.*

You will often have to work with nested groups. In these cases, a group contains various additional subgroups. If you hold down the SHIFT key when selecting the **Ungroup** command, both the selected group and all its subgroups will be ungrouped.

Mask

You can use the contour of an existing element to hide other elements either in full or in part. This procedure is called masking and the contour used becomes the mask. Only those parts of a masked element are shown which lie inside the mask. All elements that can be filled can be used as masks.

Select all the elements you want to mask by holding down the SHIFT key while you click them one after the other, or use the selection rectangle. Then select the command.

The cursor changes into a **mask** cursor. Now click the element you want to use as a mask. All element parts which do not lie within the area of the mask are hidden. All masked elements are assigned automatically to the layer in which the mask is located.

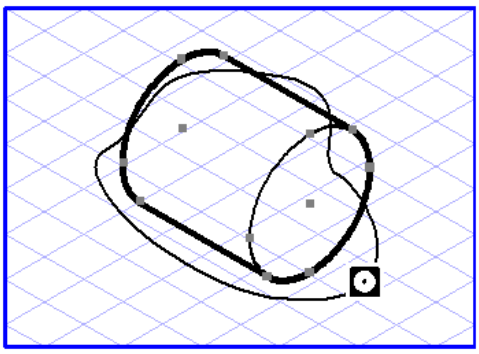

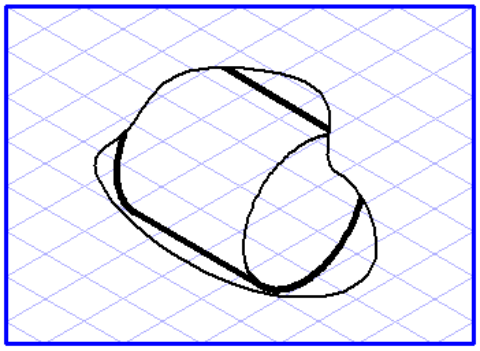

You can also insert elements into the mask subsequently. Select the elements in question and then perform the steps described above.

Note

Only a small number of file formats support the use of masks. If you want to export your illustration to a format other than EPSF, you should not use masks. You can find further information on this subject by referring to the explanations of the various file formats in the Arbortext IsoDraw Data Exchange Reference*.*

Release Mask

The menu command **Release Mask** is the opposite of the **Mask** command.

A number of elements which have been masked are treated as a single unit. However, if you later want to edit individual elements of this mask group, you must first release the mask.

To do this, select the mask and call up the command. The elements contained in the mask can now be accessed individually.

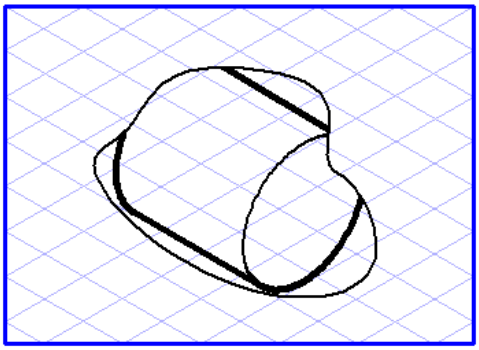

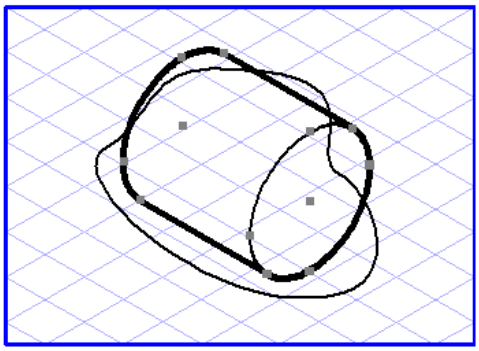

Note

Release Mask *releases only the last masking level. If a mask which is to be released contains other nested masks, these will be retained.*

Lock

You can use this menu command to lock individual objects on a layer. The locked objects remain visible on the screen but can no longer be activated or edited.

Where drawings are complex and involve numerous individual elements, it can be extremely useful if some of the elements are made inaccessible to the arrow cursor, thereby preventing them from being moved inadvertently, for example.

Note

If you have organized your drawing into layers, you can easily lock all the elements on a given layer in a single operation by using the setting options offered by the layer window (see *Show Layer Window on page 345**.*

Unlock All

This command allows you to unlock elements in a drawing. Selecting **Unlock all** means that all elements you locked earlier are once again fully accessible for editing.

If command **Hide** had been selected, the elements will become visible again.

Note

Unlock all *only unlocks those elements which have been locked with the* ***Lock*** *command. Elements on locked layers are not affected.*

Hide

The **Hide** command allows you to blend out elements which have been locked before (see Lock on page 190). The elements naturally remain part of the drawing.

If **Hide** is selected, this is indicated by a check mark in front of the menu command. By selecting the command again you can make the hidden objects reappear on the screen and the mark disappears in the menu.

One advantage of this function is that hidden elements do not need to be included in the screen redraw. This saves time where complex drawings are involved.

Note

If you have organized your drawing into layers, you can easily hide all the elements on a given layer in a single operation by using the setting options offered by the layer window.

Hide *only conceals those elements which have been locked with the* ***Lock*** *command. Elements on locked layers are not affected.*

The ***Hide*** *option is disregarded when saving a file. When you re-open a file, all the elements are displayed on the screen regardless of the settings in the last working session.*

Repeat (Repeat Command)

The **Repeat** command which can take various designations can be used to repeat the last command.

The menu entry is termed **Nothing to repeat** after Arbortext IsoDraw is started and cannot be selected.

As soon as you have performed one of the transformations; **move**, **rotate**, **reflect** or **scale**, or have generated a parallel path, this command is renamed accordingly:

Repeat move	Ctrl+T
Repeat rotate	Ctrl+T
Repeat reflect	Ctrl+T
Repeat scale	Ctrl+T
Repeat parallels	Ctrl+T

Select an element and call up the command. The command performed earlier is repeated on the selected element (which can be different to the original element).

When repeating transformations, it is unimportant how you performed the original transformation. An element can be moved, for example, with the mouse, keyboard or the **Move** dialog box. **Repeat move** results in the transformation being repeated precisely on the selected element.

This repeat function is saved until you perform one of the commands again. The last command performed is always provided for the repeat function.

Note

If you have performed a transformation and have created a copy of the transformed element at the same time, a copy is also created when the repeat is performed.

You can define the number of transformations to be performed by calling up the menu command while holding down the SHIFT key. Enter the frequency in the following dialog box and confirm your entry with **OK**.

The transformation will be repeated the specified number of times. A copy of the elements initially selected will be transformed with each repeat.

Delete Transformation

This command can be used to return text elements or placed documents edited with transformation tools to a straight front view.

Select the elements concerned and then call up the menu command.

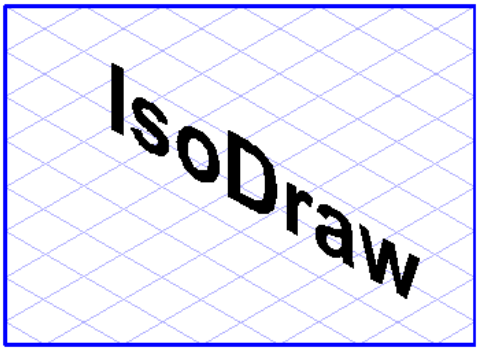

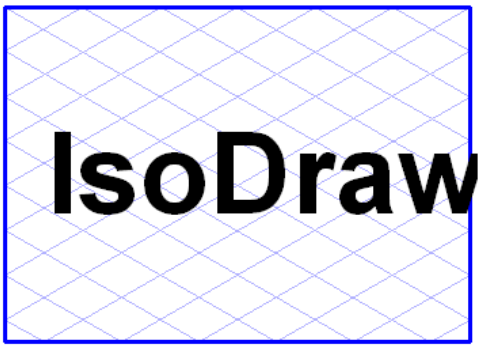

3D Transformation

Applies to Arbortext IsoDraw CADprocess only.

When working in 3D mode, you can use both the projection tools **Rotational surfaces** in the toolbox and **Extrusion tool** in the **Element ▸ Advanced tools** submenu. Selecting the **3D Transformation** menu command switches to 3D mode. You can use the tools and commands to change elements in 3D mode. The tools and commands that are available are described in brief here.

Note

Applies to Arbortext IsoDraw CADprocess only.

Further information on the tools that are mentioned can be found in Working in 3D Mode on page 671).

Notes on Importing and Placing 3D Data

Note

*Imported 3D data that has been converted into a 2D Arbortext IsoDraw file using the **keep 3D data** projection type can be returned to 3D mode via the **3D Transformation** command.*

*Placed 3D files can also be returned to 3D mode and edited further there using the **3D Transformation** menu command. The different ways that placed 3D CAD data can be edited are described in detail in Place on page 42.*

All the tools and commands available in 3D mode can be used in both cases (see Working in 3D Mode on page 671).

Using Projection Tools and 3D Transformation Together

Provided the transformation is not complete, you can switch to 3D mode from one of the tools named above. The switch between 3D mode and a projection tool can be made as many times as you like. First, select the elements you wish to edit. Then select either **Rotational Surfaces** or **Extrusion Tool**. You can now edit the elements using these tools. Provided this tool is still active, you can select command **3D Transformation**. You will see this from the green points which you use to manipulate the elements.

Choose **Element ▸ 3D Transformation**. The elements appears in 3D mode on the three axes of the coordinate system. You can now perform changes in 3D mode using the tools. The functionality of these tools will be explained in full below. If you have finished editing the drawing in 3D mode, switch back to the active projection tool and you can carry out further changes to the drawing. A description of the projection tools can be found in Advanced Tools on page 172 and Rotational Surfaces on page 613.

Tools in 3D Mode

The projection tools work in the background with 3D data. To enable you to harness all the possibilities offered by 3D data, **3D mode** appears when you select **3D Transformation**, just as it does when importing 3D data. You then have the option to change the perspective and position of the elements.

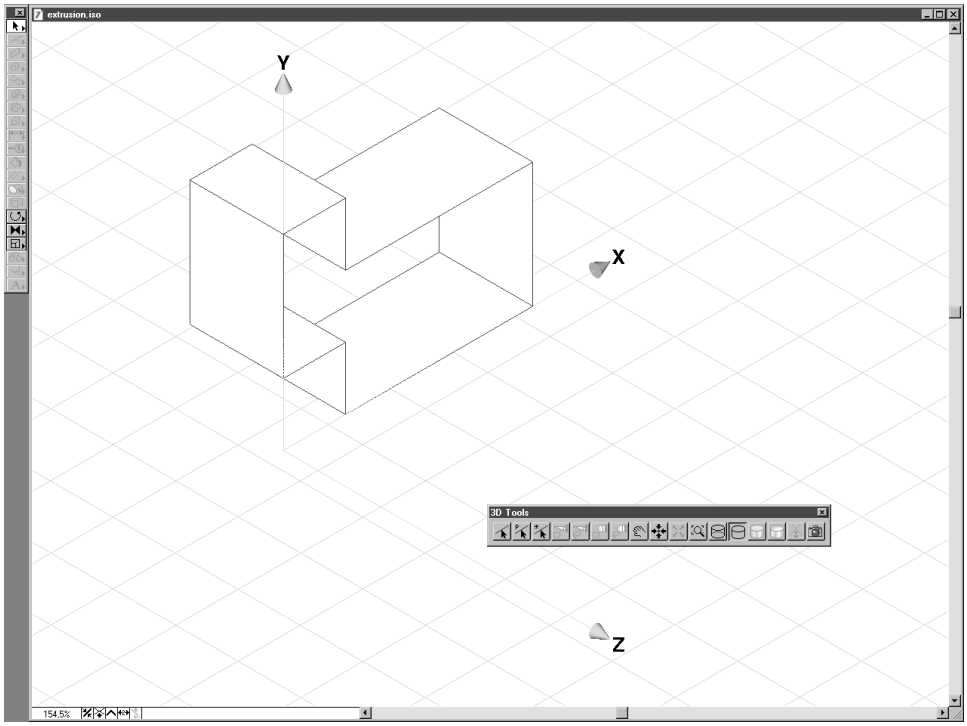

3D mode differs from the normal window in that a coordinate cross appears in the center of the drawing area. The axes are labeled X, Y and Z and represent the coordinate system for the loaded elements.

Unlike with a normal Arbortext IsoDraw drawing, which is 2D and cannot therefore be moved in space, elements which have been generated using the projection tool can now be edited in 3D. Various tools and commands are available to do this.

Tools from the Toolbox

As you can see, most of the tools are unavailable in 3D mode. The arrow cursor (without the direct selection arrow cursor) and the three transformation tools are available for editing the drawing.

You can find descriptions on how these tools are used in 3D mode in the sections devoted to the individual tools, located after the descriptions of their usage outside 3D mode.

Menu Commands

In principal, all menu commands that are not unavailable can be used. In 3D mode in particular, you can use the **Projection** and **Display** commands from the **Window** menu These menu commands are described in separate chapters.

You can find information on the changing functionality of certain menu commands when used in 3D mode in the sections that deal with those commands.

Tools in the Toolbar

Centering Tool

Clicking the **Centering** tool aligns the elements so that the coordinate origin is at the center point of all elements.

Extent Tool

To obtain an overview of all the elements, the entire drawing can be brought into the field of vision. Clicking the **Extent** tool displays the entire drawing on the screen.

If you first align the drawing on the coordinate system with the **Centering** tool you can easily create an overview during your work.

3D Move Tool

This tool allows you to rotate the drawing manually. After selecting the **3D Move** tool click on the drawing area. If you move your mouse while holding down the mouse button, you can rotate the drawing around all the axes of the coordinate system simultaneously. Imagine your hand is lying on a ball that you are rolling over a table. If you move the mouse in the same way, the elements will be rotated in the same way as the ball. You do not have to select a specific axis if you want to rotate freely in space in this way.

Three 3D Axis Selectors

Applies to Arbortext IsoDraw CADprocess only.

You can use the three 3D axis selectors to create a free axis in the coordinate system in addition to the X, Y and Z axes. For example, this is very helpful if you want to bring the drawing into a defined position.

3D Select axis (through the origin)

3D Select axis (based on a path)

3D Select axis

Note

Detailed information on the three 3D axis selectors and particularly on how the generated axis is defined for the drawing can be found in *Working in 3D Mode on page 671*.

Select a **3D axis selector**. Now click on an element in the drawing. When you have hit the element, an additional blue axis appears. The direction of this axis corresponds to that of the selected element. The arrow indicates the positive direction of the axis.

If you now select elements on the drawing with the arrow cursor, you can then move the selected elements on the free axis you created.

Alternatively, you can edit the selected elements with the transformation tools from the toolbox.

A free axis remains enabled and visible until an axis in the coordinate system has been selected or another free axis has been specified.

Display Options

Applies to Arbortext IsoDraw CADprocess only.

You can use the two selectable symbols to select both display modes from the toolbar instead of using the **Display** menu command in the **Window** menu. The symbols refer to: **Wireframe** and **HLR**. Display on page 457 describes how these display modes differ.

Camera Button for 2D Projection

When you have completed your work in 3D mode, return to the active projection tool using the **Camera** button. Click the **Camera** button. You can now continue working on the projection.

Edit Image

The **Edit image** command allows you to edit image elements. Image elements are created if you open a file containing a pixel graphic (e.g. a TIFF file).

Select an image element and call up the command.

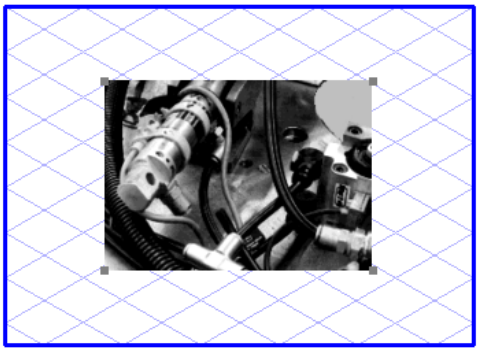

After calling up the command, the selected image element is given a thick border and a mark appears in front of the command in the menu. This shows that you are now in image editing mode for the selected image element.

At the same time, the toolbox disappears from the screen, and the pixel palette is displayed instead. The additional **Colors** window also appears. Using the tools provided in the pixel palette, the colors in the **Colors** window and the commands in the pop-up menu of the **Colors** window, you can now edit the image.

While you are in image editing mode, you cannot edit any other elements. Select the **Edit image** command again to terminate editing of the image element. Image editing is terminated automatically if you switch to another program.

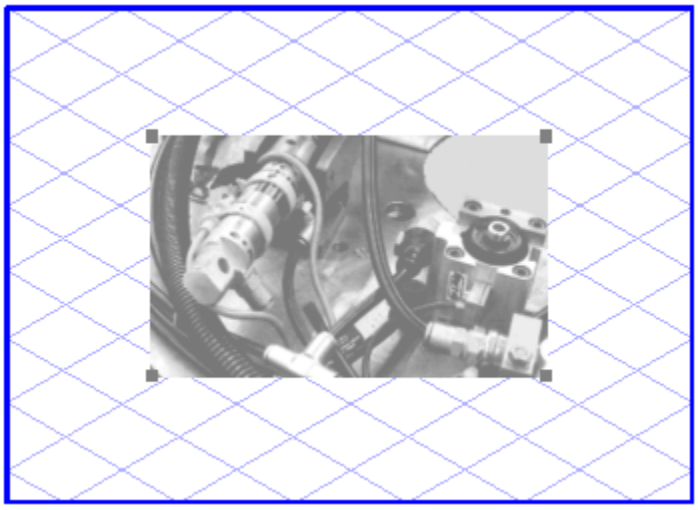

Note

To use one or more image elements as a tracing template, assign the elements in question to the background layer. You can influence the appearance of these templates by using the background display options (see *Preferences on page 108**).*

Description

Unlike most of the other elements in Arbortext IsoDraw , image elements contain raster data, as described earlier. These are usually the result of a manual illustration or a photo being scanned in and saved as a TIFF or BMP file, for example. They may, however, originate from a drawing or image processing program.

Image elements are distinguished by the attributes of their pixel data. In other words, the appearance and quality of the printout are defined by the **image type**, **resolution** and **size**.

Image Type

There are three different types of image elements which you generally specify during the scanning stage. These are

Line-art images
: Line-art images contain only black and white pixels. They are best suited for scanned illustrations which are to be electronically processed at a later stage.

Grayscale images
: Grayscale imagescan only contain pixels with gray values. It is possible to have up to 256 different gray values. Photos are normally scanned as grayscale images.

Color images
: In color images, the number of colors that can be used depends on the bit depth. The bit depth governs how much memory an individual pixel can occupy. 8-bit images can generate 256 colors, while 16-bit or 24-bit images can generate from several thousand to 16.7 million different colors.

Resolution and Size

When you scan an image, you define the quality of the scan in terms of its detail by the resolution you choose. The resolution specifies how many dots are scanned per inch (dpi = dots per inch). The higher the resolution, the better the quality of the printout - but only if the printer is capable of producing this high resolution on paper.

The size of the file increases rapidly as you increase the resolution. For this reason, you should make sure that you choose an appropriate resolution for the quality you require.

Take, for example, a photograph 100 mm wide scanned at 300 dpi. If you change the resolution subsequently, the size will also change and vice versa. It is thus possible to enlarge the size of the displayed image to a width of 200 mm, for example. Doubling the width halves the resolution to 150 dpi.

Generation

Image elements cannot be generated in Arbortext IsoDraw itself but can be introduced by opening a file in a specific pixel format or by copying the element from another Arbortext IsoDraw illustration.

After being opened, the pixel graphic is positioned as an image element in a new window. It can be imported into other drawings without any difficulties. To do so, select the image element with the arrow cursor. Then choose **Copy** or **Cut** from the **Edit** menu. Open the file into which you want to paste the image element. Then select the **Paste** command there.

Selecting

You select image elements by clicking the element.

Modifying with the Arrow Cursor

You can move image elements anywhere in your drawing with the arrow cursor by first clicking the element and then moving it to a new position while holding down the mouse button.

If you hold down the SHIFT key during this process, the direction in which you can move the element is restricted to the major axes of the current grid and the horizontal axis.

If **Grid Snap** or **Element Snap** has been activated, the element points snap to the nearest element points or grid points.

Form

An image element possesses no contour or fill that can be changed by using the commands in the **Attributes** window.

Element Info

The **Element info** dialog box allows you to change all of the settings relating to an image element. Select an image element and call up the **Element info** command in the **Element** menu.

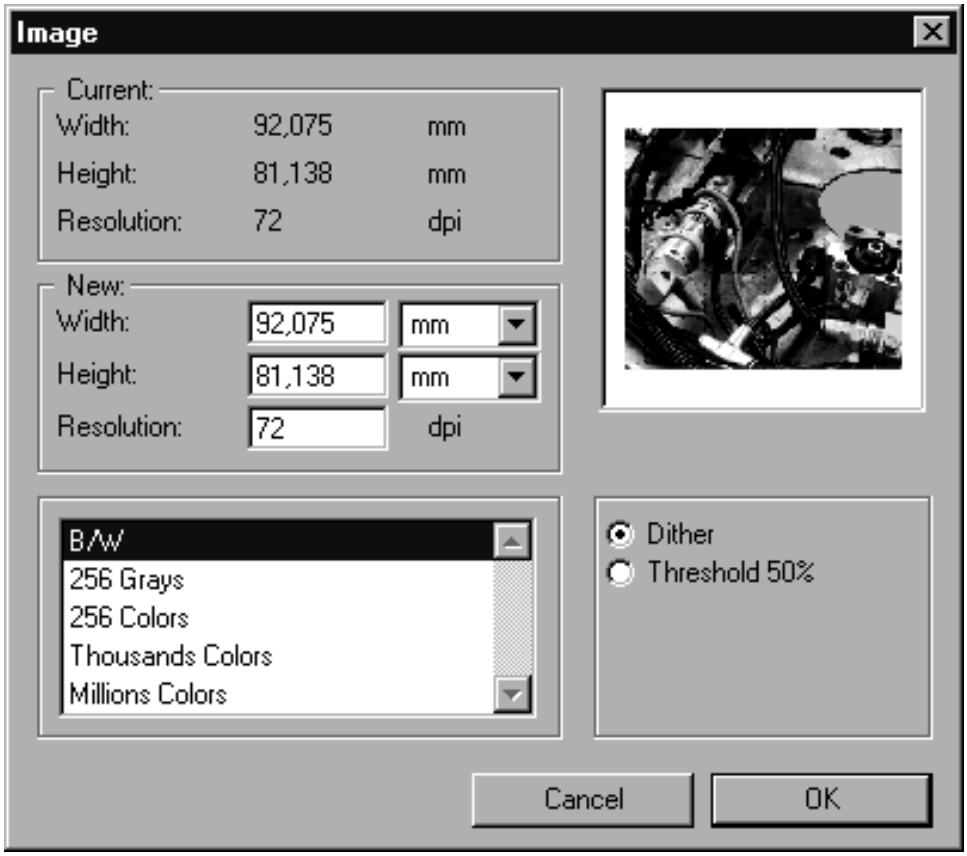

Note

*The **Element info** dialog box can only be called up for a single element.*

You can perform changes by making entries in the respective fields or by making selections from the pop-up menus. These changes will be displayed roughly in the preview box at the upper right.

Current

This section displays the current width, height and resolution of the image element.

New

You can enter new values for the width, height and resolution in this section. The changes are always made in proportion to each other, i.e. if you change the width, the height and resolution will change accordingly. The pop-up menus allow you to set the unit of measurement of your choice.

Image Type

You can change the type and depth of the image in this section.

Dither/Threshold

If you have changed either the type or bit depth of the image element, you can specify how this conversion is to be implemented by clicking one of the two buttons. This is important since, after you have made a number of changes, you will no longer be able to display all the color information contained in the original image element, e.g. if you switch from grayscale to line art.

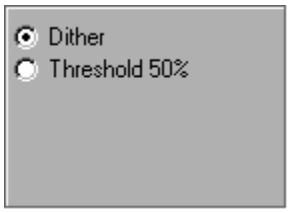

If you select the **Threshold 50%** option, the program assigns each color value or gray value of the old image element to a value which is available in the new image element. This means that, for example, when converting from grayscale to line art, each pixel of a photo can only be either black or white.

The **Dither** option uses a different technique. After selecting this option, Arbortext IsoDraw attempts to retain the impression of the grayscale by using pixel patterns. Generally speaking, you obtain better results with the **Dither** option.

Quitting the Dialog Box

You can confirm your entries by clicking **OK**. Clicking the **Cancel** button quits the dialog box without applying any changes you have made.

You need special tools for this type of image editing which you can find in the pixel palette and the pop-up menu of the **Colors** window.

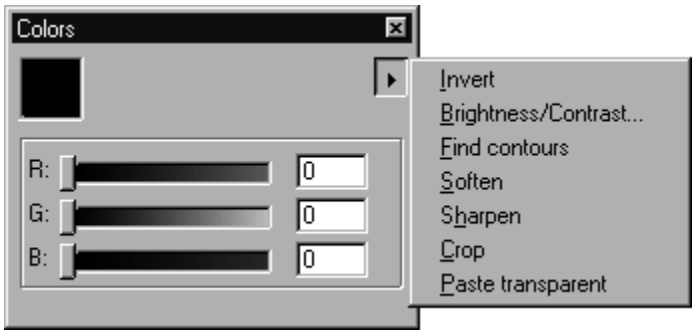

First, select a single image element with the arrow cursor and then choose **Element ▸ Edit image**. The image element is placed inside a black frame. You are in image editing mode as long as this frame is visible.

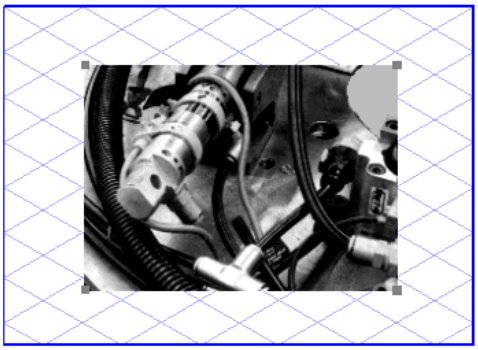

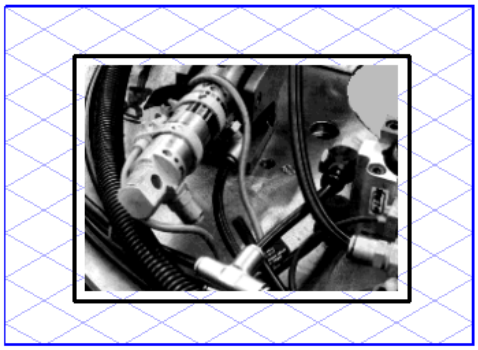

You can exit image editing mode by choosing **Element ▸ Edit image** again.

Note

You can only apply the ***Undo*** *function to the entire image editing session and not to individual actions you perform during image editing.*

Image Editing

The method used for editing raster (pixel) data differs greatly from that used for editing vector data such as lines or ellipses. Whereas you can change the path of a line by moving an end point, in an image element you need to delete the old line pixel by pixel in order to add a new line.

Pixel Palette

Selecting Pixel Areas

You also have a selection rectangle and a lasso at your disposal in image editing mode. Choose the **Selection** tool from the pixel palette. Now click the image element and drag the **selection rectangle** . As soon as you release the mouse button, you will see a floatingselection. This is an area of pixels which is highlighted by an outline. This area can now be moved with the cursor or edited in other ways. For example, you can copy the selection onto the clipboard or modify it using the rotation, reflection and scale functions.

You can call up the lasso by holding down the ALT key while selecting the pixels. As soon as you click an image element outside the selection, the selection is deselected again. The pixels are then pasted into the actual image.

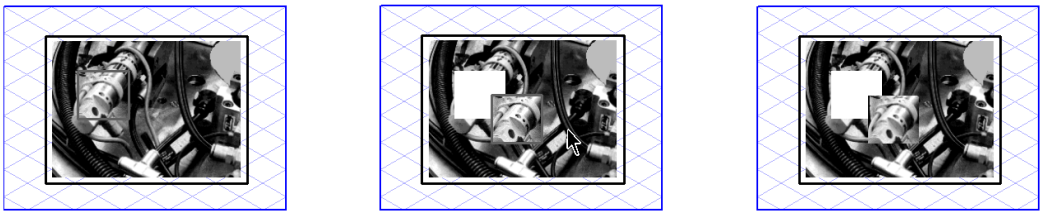

Pixel Pen

You can use the **Pixel Pen** for performing minor repairs to image elements. Select this tool from the pixel palette and click the image element concerned. Move the mouse as you wish. While doing so, you will see the individual pixels being colored in with the active pixel color. Now release the mouse button.

Double-clicking on the **Pixel Pen** in the pixel palette opens up the following dialog box:

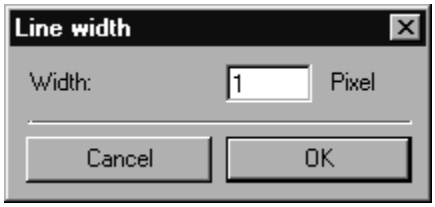

Here, you can change the width of the **Pixel Pen**. Click **OK** to confirm your entry or **Cancel** to close the dialog box without making any changes.

Line Tool

You can use the **Line** tool to draw a straight line on the image element. Select the tool from the pixel palette and click on the image element. Move the mouse in the required direction. While you are moving the mouse, you will see that a straight line is being dragged in the direction of movement. The line will be drawn in the active pixel color. Release the mouse button when the line has reached the required length.

The orientation of the line you are dragging depends on whether grid alignment is switched on or not. This method of working corresponds to the **Line** tool in the toolbox. This also applies for grid snap and element snap, and the dynamic dimension display when dragging the line. You can find a detailed description of this in Line on page 484.

Double-clicking the **Line** tool in the pixel palette opens up the following dialog box:

Here, you can change the width of the line. Click **OK** to confirm your entry or **Cancel** to close the dialog box without making any changes.

Eraser Tool

You can use the **Eraser** tool to delete pixel areas at will. Select this tool from the pixel palette and click the image element concerned. As you move the mouse, all the pixels located below the **Eraser** tool will be deleted.

Double-clicking the **Eraser** tool in the pixel palette opens up the following dialog box:

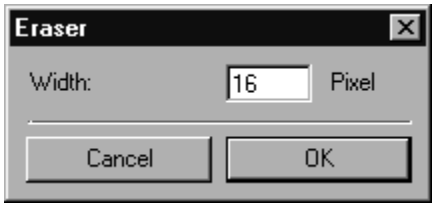

Here, you can change the width of the **Eraser** tool. Click **OK** to confirm your entry or **Cancel** to close the dialog box without making any changes.

Note

Zooming in to magnify your illustration allows you to delete with greater precision, whereas the further you zoom out from the image, the larger the area becomes which you can delete in one movement.

Bucket Tool

The **Bucket** tool allows you to apply the active pixel color to pixel areas with the same color values. Select this tool from the pixel palette and click the area which you would like to color in. The new color will be poured into the selected area. For this reason, you must also make sure that the area to be filled is closed on all sides, otherwise the color will also run into areas you don't want to color.

Pipette

The **Pipette** tool is used for measuring the color value of a pixel. Select this tool from the pixel palette and click the image element concerned. This will make the color value of this pixel the active pixel color. The color will be shown as the active color in the **Colors** window.

When using the pixel **Pen**, **Line** tool and **Bucket** tool, you can switch temporarily to the **Pipette** by holding down the ALT key. This enables you to select a new pixel color without having to quit the tool. As soon as you release the key, the tool becomes active once again.

Rotation

Image elements are rotated in the same way as other elements with the **Rotation** tool. You must first select the element to be rotated. You can then proceed to rotate the selected element as described in Rotation on page 630.

Note

Perspective rotation of pixels is not possible.

Rotating pixel areas gives rise to white areas which enlarge the floating selection.

Reflection

Image elements are reflected in the same way as other elements with the **Reflection** tool. You must first select the element to be reflected. You can then proceed to reflect it as described in Reflection on page 635.

Note

Perspective reflection of pixels is not possible.

Scale

Image elements are also scaled in the same way as other elements with the Scale tool. You must first select an element which is to be scaled, before you can proceed to scale it. You can then proceed to scale it as described in Scaling on page 639.

Colors Window

The **Colors** window appears as soon as you start editing an image.

Throughout this process, you are provided with the colors from the RGB space. You can use the color slider to set your desired color.

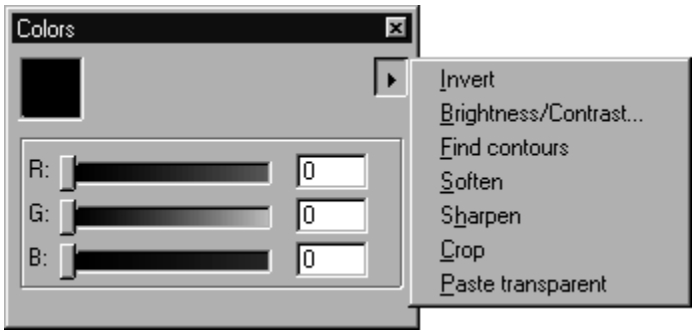

If you have selected a color, this selection will become the active pixel color. This color is used by the **Pixel Pen**, the **Line** tool and the **Bucket** tool.

If you click on the arrow at the right-hand side of the box, a pop-up menu appears with commands for creating additional effects when editing images.

Pop-up Menu for Image Effects in the Colors Window

Choosing Commands from the Pop-up Menu for Image Effects

The commands in this menu give you additional options for editing the raster image. The command is always applied to the selected area.

Invert

This command inverts the pixel values over either an entire image or a selected area. This lets you convert a positive image to a negative one or to turn a scanned negative into a positive.

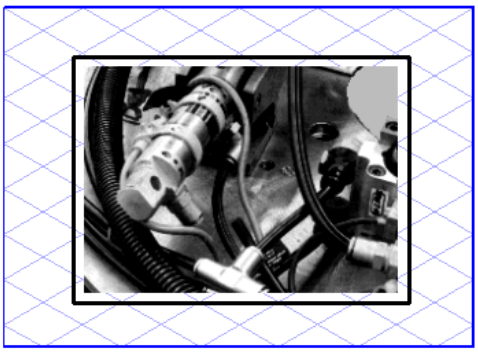

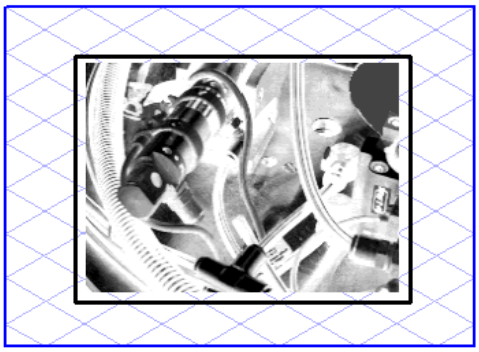

Brightness/Contrast

This command allows you to change the overall values for brightness and contrast over either an entire image or a selected area. The following dialog box appears when this command is selected:

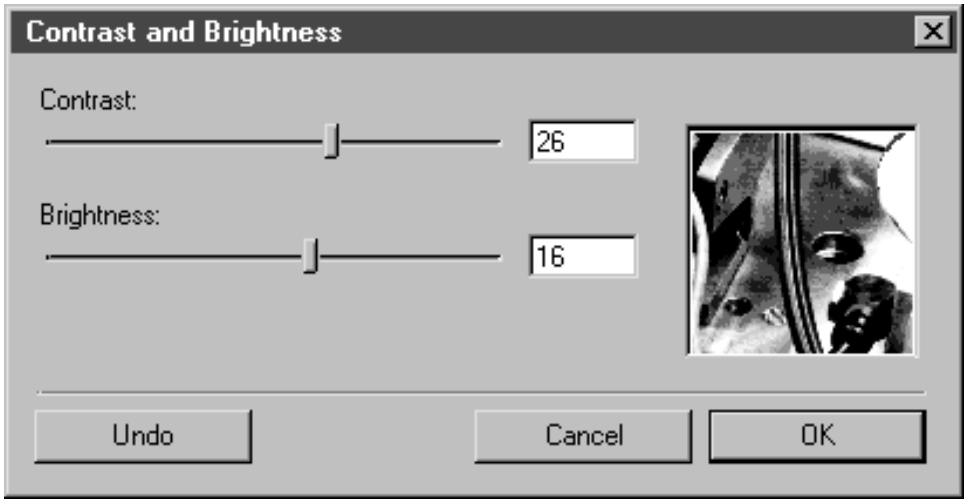

The current values are displayed in numerical form and can be changed by means of the sliders. You can check your setting in the preview box on the right. Positive values increase brightness and contrast, negative values reduce them. Clicking **Undo** resets the value changes to 0. Confirm your entries by clicking **OK**. Click **Cancel** to quit the dialog box.

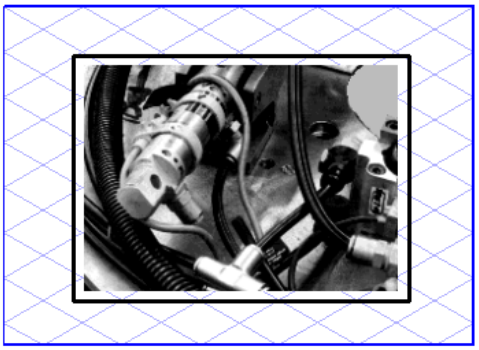

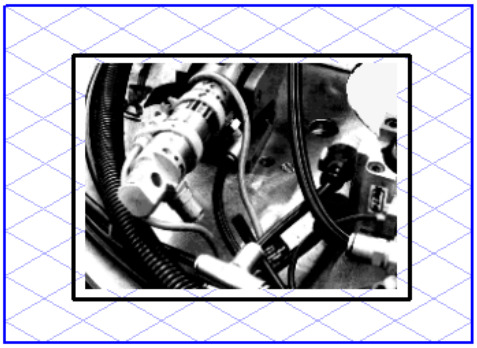

Find Contours

This command detects the contours of an image or image section. The program searches for marked differences in brightness and outlines these with lines. This function will help you in tracing contours.

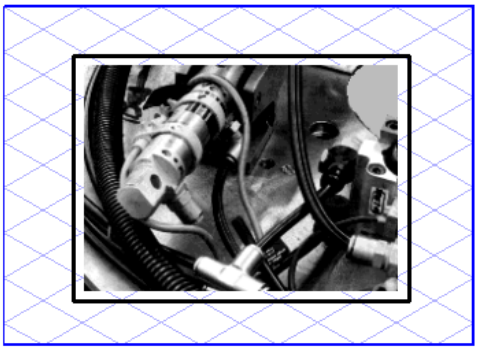

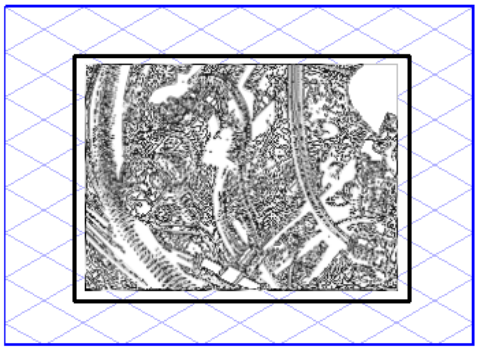

Note

You can improve the quality of the generated contour by defining a higher resolution for the image element.

Soften

The **Soften** function softens excessively prominent contours. It reduces the contrast between the pixels to produce a smooth overall impression. This command too can be applied to either the entire image or an image section.

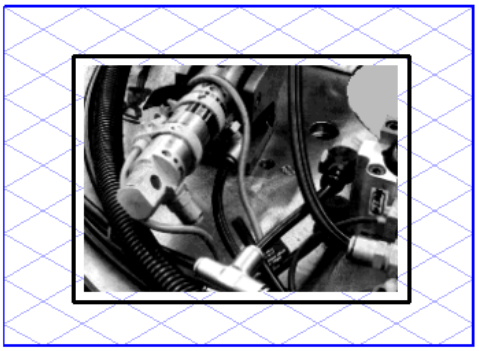

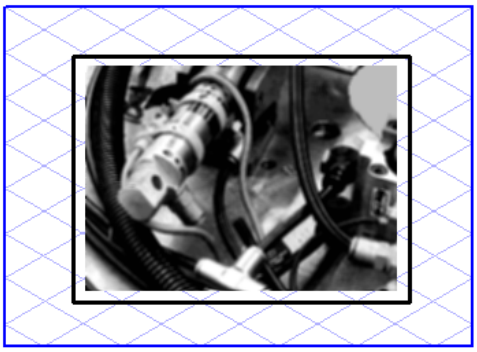

Sharpen

The **Sharpen** function has the opposite effect of the **Soften** function in order to create a better contrast or lend greater clarity to an image. It increases the contrast between the pixels to produce a sharper overall impression. This command too can be applied to either the entire image or an image section.

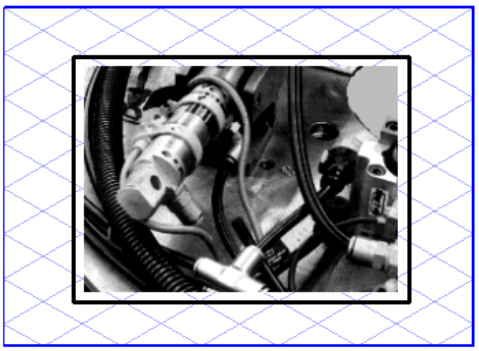

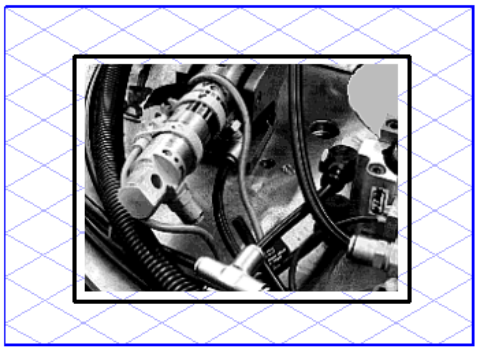

Crop

This command allows you to cut out a section of an image. Select the required image section using the selection rectangle and call up the command. The required section will be cut out and appear on the screen, the rest of the original image disappears. The new image size depends on the cropped area.

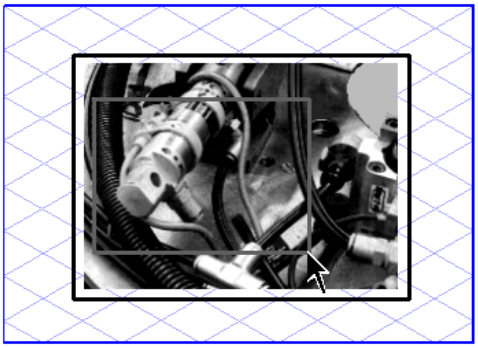

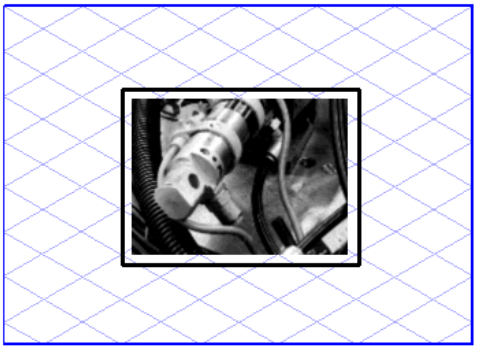

Paste Transparent

When this command is activated the floating selection will become transparent, in other words, all the white pixels will appear transparent. You can thus paste copied parts without the white background of the selection hiding the rest of the image. The command remains active until you select it again to deactivate it. A check mark indicates the command is active.

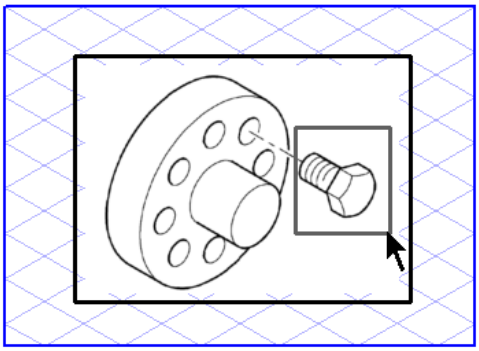

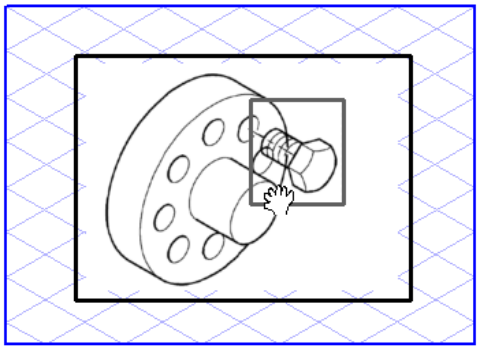

Some Hints

At this point, we would like to give you a few tips on handling scanned illustrations and photos. These are probably the most common reasons for working with image elements.

Integrating Scanned Illustrations

In most cases, ink drawings of old illustrations will be available in formats which are far larger than the formats normal scanners can handle. In this case, it is advisable to make a paper print which has already been reduced in size. When scanning the drawing, you should be aiming to achieve the size you want for your printout. If, for example, you are scanning a line-art graphic with a scale of 1:1 and want to print it out again afterwards in the same scale, you should then select a resolution of 300 to 400 dpi. On the other hand, you can reduce the resolution if you are scanning with a larger scale than you actually want to print out later.

Templates

Templates are placed on the background layer where they are displayed in the selected background color (see Preferences on page 108). Generally speaking, a 150-dpi resolution - and often even less - is adequate for tracing. Earlier versions of Arbortext IsoDraw only displayed templates with 72 dpi.

Particular care should be taken not to choose a resolution which is higher than necessary, as this will slow down the screen redrawing process.

Exporting Illustrations with Image Elements

The combined use of raster and vector graphics in the same file is only possible in a small number of formats (e.g. EPS, MIF, Interleaf ASCII and CGM). If you are unable to use these, export the file in TIFF format. This format can be read by most programs.

Note

You will find information about the individual formats in the Arbortext IsoDraw Data Exchange Reference.

Transparency

Applies to Arbortext IsoDraw CADprocess only.

You will find two commands in the **Transparency** submenu. Using the **Image transparency** command, you can set image elements or areas of image elements to transparent. The **Remove 3D transparency** command is used in 3D mode to remove transparent areas of objects.

Image Transparency

Image elements are created if you open a file containing a pixel graphic (e.g. a TIFF file).

Select an image element for the application of image transparency and call up the command. The following dialog box appears once you have selected this command:

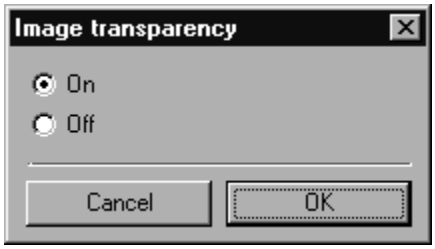

You have the option of selecting whether the raster image is to be set to transparent. Confirm your selection by clicking **OK**. Click **Cancel** to quit the dialog box.

For a raster image, the background generally consists of white pixels. If you wish to colorize certain areas, e.g. in a scanned raster image, the white pixels hide the color. If you then move the colored area forward, areas which should be visible will be hidden.

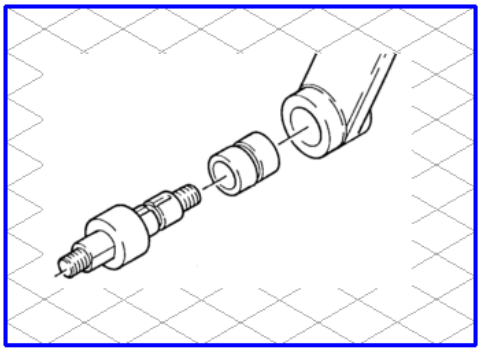

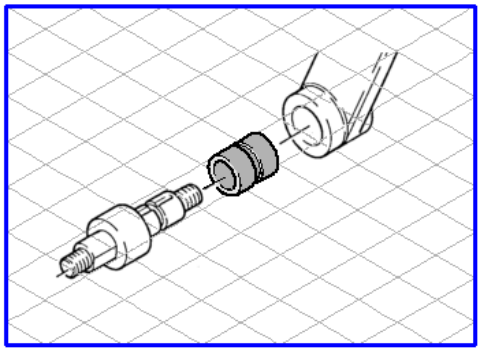

The examples above shows the raster image with white and transparent backgrounds. The gray bushing is visible without any of the outer edges of the bushing being hidden.

Note

The transparency will always be taken into account on the screen and when printing out. If you export a file, the transparency is lost in most formats.

The following formats take the transparency into account:

- *EPS*
- *Adobe Illustrator*
- *CGM*

Information on the setting options can be found in the Arbortext IsoDraw Data Exchange Reference.

Remove 3D Transparency (in 3D Mode)

The 3D transparency tools can be used to make freely selectable areas of selected objects or surfaces transparent. They can be used to make areas (objects or surfaces) that lie behind other areas visible too.

 **3D transparent rectangle**

 **3D transparent free shape**

If you want to make transparent areas of objects or surfaces visible again, select the relevant objects or surfaces. Select the **Remove 3D transparency** command. All the transparent sections of the selected objects or surfaces are then immediately removed.

4

Objects Menu

A number of commands in the **Objects** menu can be selected by means of keyboard commands. If there is a key combination command code, it is indicated next to the command text.

The figure shows which commands in the **Objects** menu can be selected using a command code.

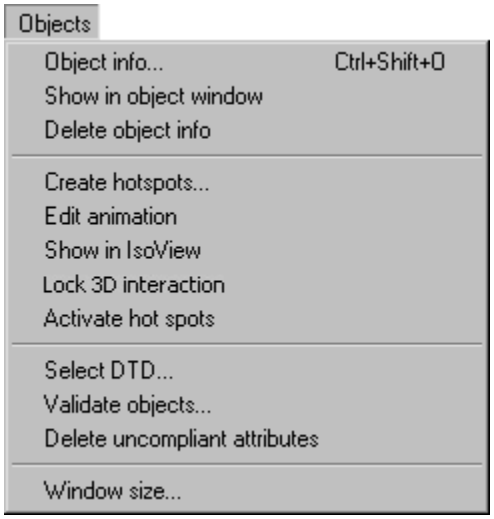

Note

Menu ***Lock 3D interaction*** *applies to Arbortext IsoDraw CADprocess only.*

The commands in the **Objects** menu allow you to assign specific information to an element and to prepare an illustration for use in interactive catalogs or manuals. The term object stands for an individual element or a group of elements which have a special meaning for your work.

Before we look at the individual commands, let us first take a look at what this information is used for.

What are Objects?

When you draw with Arbortext IsoDraw , you generate individual elements such as lines and ellipses etc. You can group these together to simplify the process of working with large numbers of elements. If you draw a page of a spare parts catalog, you will generally create a group for each individual spare part containing all the elements belonging to this group.

These groups are not named, however, due to their large numbers. Arbortext IsoDraw is therefore unable to identify a specific group.

For this reason, Arbortext IsoDraw allows you to assign a name or identification to this group. This allows you to search for this group and identify it unambiguously. An element or a group to which you have assigned such additional information is known as an object.

Why Do We Need Objects?

Let's assume you have created an exploded view illustration for a spare parts catalog. Now you assign a name to each spare part drawn. You use the spare parts number of the part concerned for the name.

This provides a basis for managing this data in a database. How you can do this will be dealt with later. Let us first take a look at how you can use this data.

You could, for example, write this information to a text file which would then contain a list of all the parts drawn on the illustration. This list could then be loaded into a database which manages your archive. This allows you to search your database for specific terms.

Management with Databases

Let us assume that you have assigned additional information to all your illustrations in this way and you have then loaded this information into a database. You could then search for a specific spare parts number to determine the illustrations it appears on. Or you could create lists of illustrations containing all the spare parts numbers occurring on the relevant illustrations.

Interactive Documents

”Interactive documents” are another area in which objects can be used. These are illustrations which are employed in electronic spare parts catalogs or manuals.

When a document of this type is displayed on the screen, the user can click on specific areas to request the information he needs. As a general rule, every document is therefore provided with buttons for paging or with menus containing the relevant commands. Numerous applications also include hyperlinks. These are cross-references to other parts of the manual. If a user clicks on a certain area of the illustration or text, the hyperlink will be executed. This can have the effect, for example, of retrieving another page onto the monitor or executing a predefined action. The areas where the user clicks to execute an action are known as hotspots.

Hotspots

Illustrations or documents are said to be interactive when the user can click on specific areas of the screen to initiate an action himself. This could involve being switched to another page of a spare parts catalog, for example, or interrogating a central computer to determine whether a certain part is still in stock. The possibilities for actions are extremely numerous and diverse and are geared very closely to the specific needs of the enterprise in question.

In all cases, however, the area the user clicks needs to be identified unambiguously. To trigger a very specific action, he needs to click within a precisely defined area. This area of the illustration is known as a hotspot. If the user clicks outside this area nothing will happen.

This area must be defined exactly when the illustration is created to ensure that the user can later execute the precise action he has in mind.

Using Object Information

The object information can be used in Arbortext IsoDraw for orientation or identification purposes. This information becomes even more interesting, however, if it is used in conjunction with other programs.

All object information, including the hotspot contour, can be used in a variety of ways. When exporting to CGM, this information will be written to the CGM file provided that the CGM Version 4 is used as a minimum.

Other possibilities are opened up by the API (Application Programming Interface). This Arbortext IsoDraw programming interface allows direct access to this information.

Note

If you would like to use the programming interface of Arbortext IsoDraw, please contact your PTC sales representative.

Object Info

Object info can be assigned to each individual element or group of elements. Since information is only recorded for one object at a time, several individual elements have to be grouped together (see Group on page 187).

Creating Object Info

The **Object info** command is only available if the current file has already been saved with a name.

Select the element or group for which you want to create object info, then choose **Objects ▸ Object info**. The following dialog box appears:

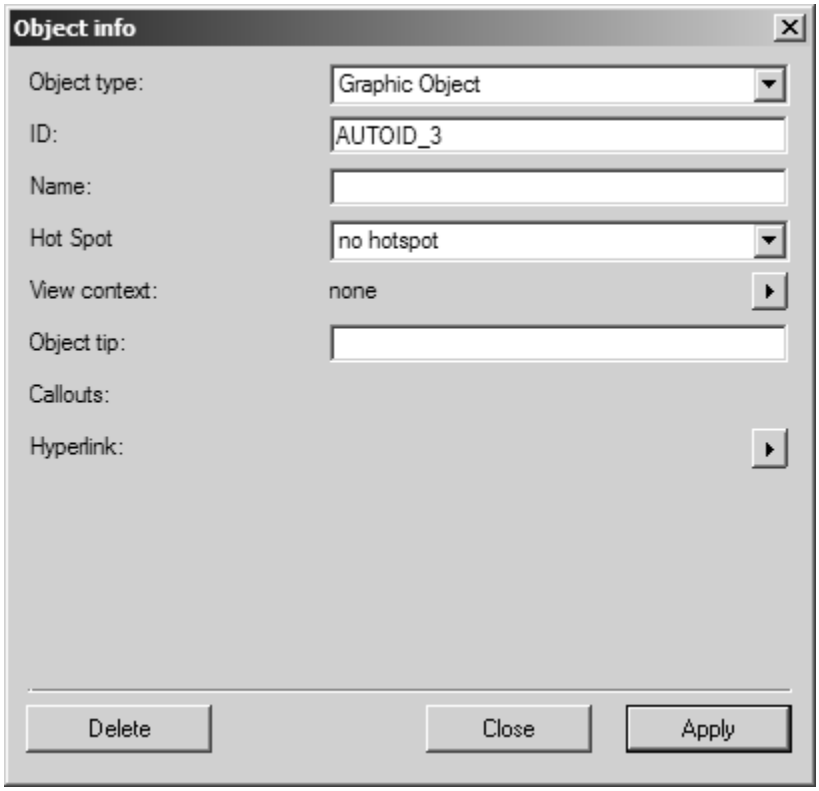

There are several boxes where values can be entered. These values are reserved for your exclusive use and do not influence how Arbortext IsoDraw functions. Arbortext IsoDraw will simply manage these values for your information.

Object Type

Arbortext IsoDraw allows you to work with different object types. An object type could be called spare part or assembly. Such object types need to be defined before you can use them. More information on this subject can be found in Select DTD on page 294.

The default object type in Arbortext IsoDraw is known as Graphical object. If you have used the **Select DTD** command on the **Objects** menu to select a definition file supporting several object types, you can select these from this pop-up menu. When choosing the object type, other entry fields may be visible in the dialog box.

ID and Name

The **ID** and **Name** boxes allow you to name and identify the object. The ID is a unique designation which is only used once on an illustration. Arbortext IsoDraw automatically suggests a unique ID when you create the object info. This consists of the characters `AUTOID_` and a number. You can change this unique ID at any time if you choose. Your entry will be checked to ensure it is unique. It will only be accepted if it has not been used for another object. Initially, the **Name** box will be empty. You can enter your own name in this box - it needs not necessarily be unique.

It is up to you what form these entries take. The ID, for example, could be a unique number which identifies a particular object. The name could be e.g. the spare parts number of the object. If you use this system, you can identify every object uniquely, even if one spare part occurs several times with the same number.

ID and name are used later to identify the object or evaluate clicks in an interactive environment. These entries must therefore correspond to specific rules to ensure that no problems arise later.

Rules for ID Entries

Use only lower case (`a–z`) or upper case (`A–Z`) letters, numbers (`0–9`) or one of the symbols; `$` (dollar sign), `-` (minus), `+` (plus), or `_` (underscore) for an ID. This ensures that your ID can be used in all major environments, e.g. HTML, XML and SGML. Other characters and symbols, e.g. spaces, may result in your ID not being accepted in these environments.

Rules for Names

The rules for names are comparable with those for IDs. Here it is particularly important where you wish to use a name. Below are a few examples:

WebCGM	Only `a–z`, `A–Z`, `0–9` and `$-+_` are permitted. All other

	characters and symbols will mean that the name cannot be used in a link.	
CGM	Avoid the following symbols:	
	,	comma
	·	point
	( )	brackets
	´ “	quotes
		spaces
Arbortext IsoDraw	Same as CGM above.	

The **Validate objects** command on the **Objects** menu allows you to check and correct existing ID entries and names.

Hotspot

A hotspot is required if you later wish to trigger an action as soon as the user clicks on this area. The **Show objects** command in the **Windows** menu allows you to display hotspots. If the **Activate hotspots** option is enabled, you can try out this command. If you click a hotspot with the arrow cursor, it will be color-highlighted. There are three ways of defining hotspots.

No Hotspot

The object has no hotspot characteristics. No action is triggered if the user clicks on this object later.

Surface

The area which the object occupies is defined as the hotspot. Arbortext IsoDraw automatically determines the contour of the object in the background and manages it. This contour can only be found if the elements selected form a closed area. Below are two examples. The illustration on the left shows you a closed area, while the illustration on the right is a typical case where no hotspot can be found.

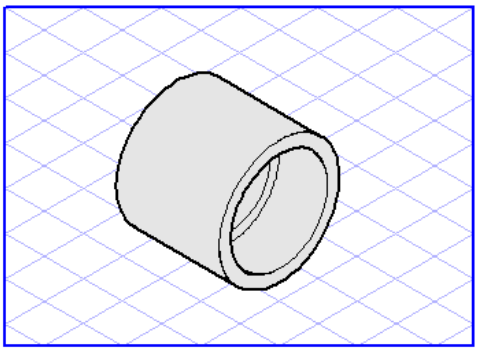

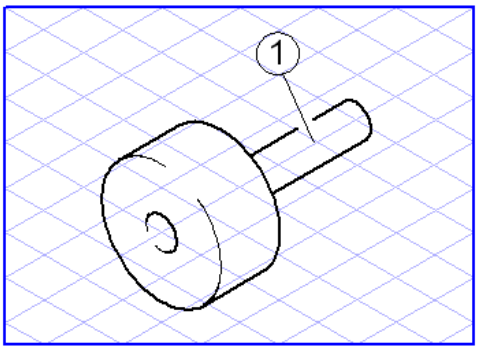

Lines of Object

In a number of cases, the object does not enclose a closed area, as in the case of a line in a circuit diagram. Here it is advisable instead to use the object itself as a hotspot. The user can then click on the lines of the object in order to trigger the action. The following illustration shows a typical case of where such a setting is preferred.

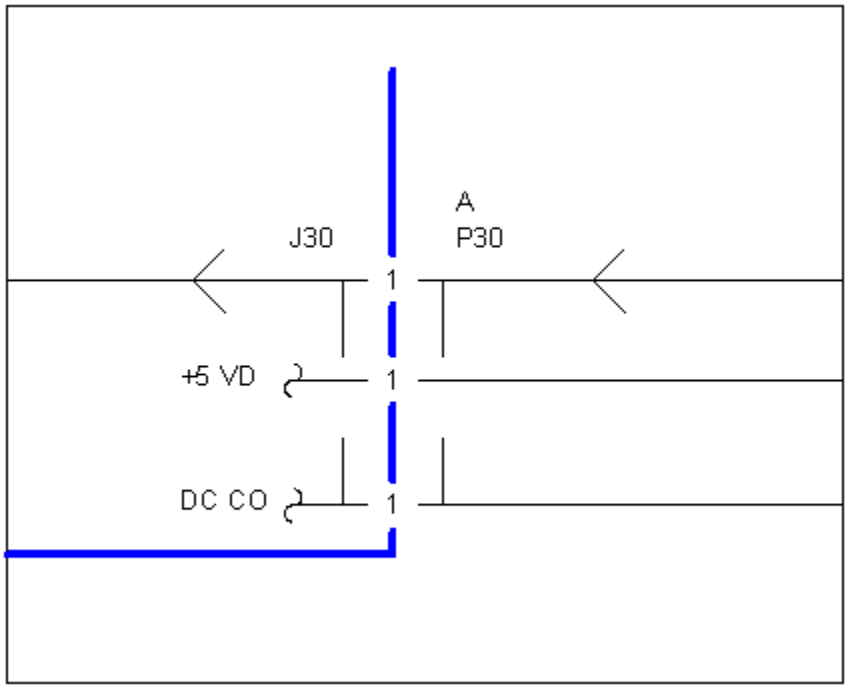

View Context

A graphical object can also be used as the target of an action. For example, you may often want to click on one object in order to move to another one. The target object is then displayed in the window. The setting in the **View context** field influences the area displayed around the target object. Choose a setting from the **View context** drop-down list.

None

No special target area is defined for the object. The object is enlarged so that it fills the screen section.

Current Window

With this command, the part of the illustration which is currently visible can be defined as the extent. By enlarging or reducing the scale and moving as necessary, you can define the section that you wish to assign to the object. Then open the **Object info** dialog box and choose `current window` from the **View context** drop-down list. The coordinates that are found are displayed next to **View context**.

Extent of Object

This allows you to specify that the size of the object is to be used to define the extent. If you choose this setting, the extent will automatically be adapted to the size of the object if the latter changes.

Size

Selecting this command will open another dialog box where you can enter the width and height of the extent. The dimensions of the object will be shown as a recommendation.

Object Tip

An object tip is a text string which is displayed when the user moves the mouse over an object. It can be compared with the tips you see if you move the mouse over one of the symbols in the toolbox.

If you want to use multiline object tips, end each line with the two characters `\r`.

Example: `This is the first line.\rThis is the second line.`

Callouts

If an object has connected callouts, the **Callouts** field in the **Object info** dialog box shows the callout text value for each connected callout, separated by a semicolon. For example, if an object has connected callouts with callout text values of `1`, `2`, and `3`, the **Callouts** field shows:

If an object does not have connected callouts, the **Callouts** field is blank. (For more information, see Callouts Connected to Objects on page 568.)

Note

*You cannot edit the **Callouts** field in the **Object info** dialog box. If you want to change connected callout text values, see Editing Objects with Connected Callouts on page 570.)*

Hyperlink

This allows you to define what will happen if the user clicks on this object. In most cases, you will jump (link) to a specific target.

There are many targets that you can address from a graphical object. Choose a target from the **Hyperlink** drop-down list. These are described in detail below.

No Link

This setting results in no link being assigned to the object. Any link which has already been entered will be deleted.

Viewport

You can assign a view to the object (see Show Attribute Window on page 352). In this case, the view in question will be called up as soon as the user clicks the active hotspot.

Do this by selecting the **Viewport** command from the pop-up menu. The following dialog box appears:

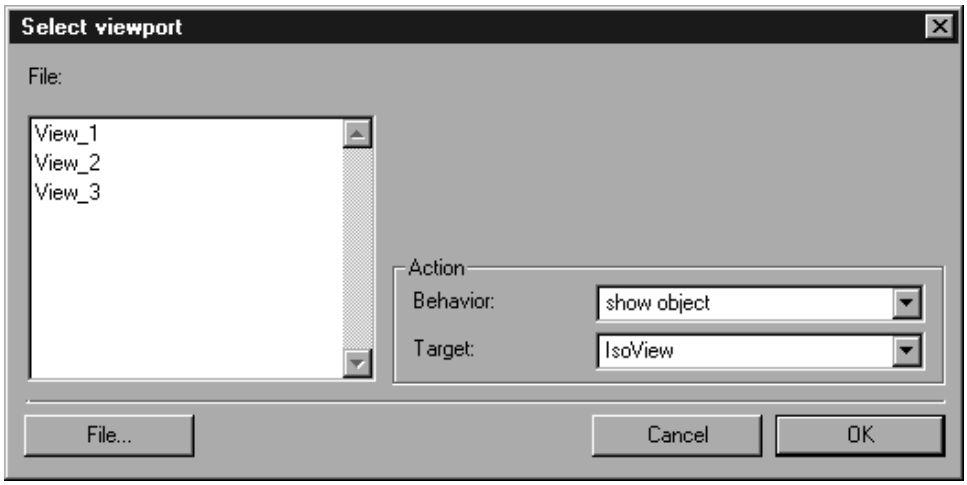

The **File** list box displays all the viewports which have been created for the current file. Select one of these viewports and click **OK**. This links the viewport to the object.

You can also select a viewport which is not located in the current file. Do this by clicking the **File** button. The dialog box from the **File** ▸ **Open** ▸ **Open file** command appears. Select the required file and confirm by clicking **OK**.

The path for this file is now shown in the dialog box. The list shows all viewports created for this file. Click one of the viewports to link it with the object.

You can now use the settings in the **Action** area to specify what exactly is to happen if the object jumps to this viewport. These settings relate to subsequent usage in interactive environments. They are described in further detail inActions for Viewports and Objects on page 231.

Clicking **Cancel** terminates selection of the viewport without performing any changes. Clicking **OK** confirms your selection. The selected viewport will be displayed in the object info.

Object

You can jump from one object to another. Clicking the current object will move you to the target object. Do this by selecting the **Object** command from the pop-up menu. The following dialog box appears:

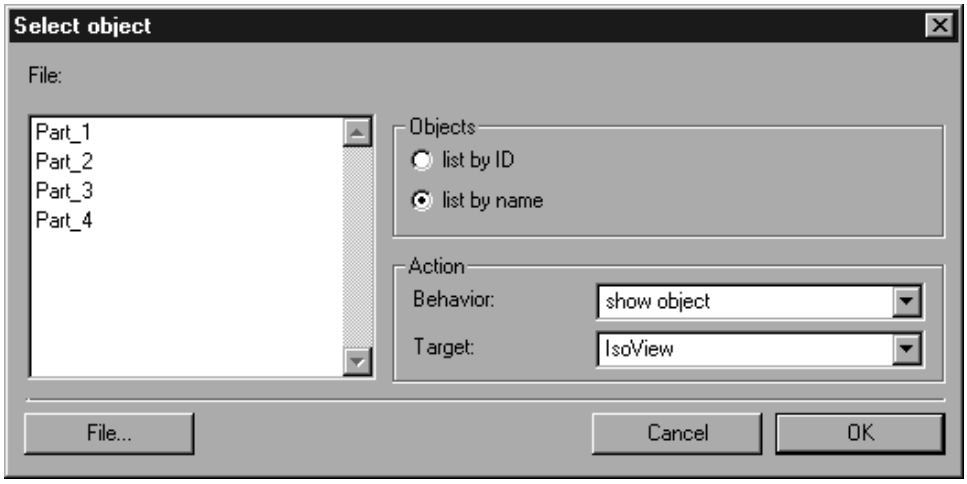

The name and path of the current file are displayed in this dialog. The list shows all objects created in this file. You can select whether the objects are to be listed according to ID or name. Select one of these objects and click **OK**. You have now selected this object as a target for the current object.

You can also select an object which is not located in the current file. Do this by clicking **File**. The dialog box that you will already know from the **Open file** command appears. Select the required file and confirm by clicking **OK**.

The path for this file is now shown in the dialog box. The list shows all objects created for this file. Click on one of the objects in order to link it to the current object.

You can now use the settings in the **Action** area to specify what exactly is to happen if the object jumps to this viewport. These settings relate to subsequent usage in interactive environments. They are described in further detail below in the next section.

Clicking **Cancel** terminates selection of the object without performing any changes. Clicking **OK** confirms your selection. The selected object will be displayed in the object info.

Actions for Viewports and Objects

You can try out some links in Arbortext IsoDraw by enabling the **Activate hotspots** option. In practice, however, most links can only be executed in an interactive environment, generally a Web browser. By way of example, you can integrate the illustration into an HTML page. An appropriate plugin will then be required for the Web browser in order to display the file.

For Arbortext IsoDraw and CGM files, you will require Arbortext IsoView, a separate product available from PTC. This not only displays the illustration, but also allows you to change the scale and . Arbortext IsoView also monitors the hotspots in the illustration. If you click on one of these hotspots, Arbortext IsoView executes the link relating to the object. There are various options which can be selected relating to both the behavior of the target object and to the target environment.

Behavior of Objects and Views

For objects and views, you can select how the jump is to be made to such a target. There are a range of options available for this:

`full view`	All objects in the file are displayed centered in the Arbortext IsoView window.
`zoom to object`	The target object is displayed centered in the Arbortext IsoView window. The precise area is displayed which was defined earlier for the extent.
`move to object`	The target object is displayed centered in the Arbortext IsoView window, its size is unaffected.
`new highlight`	The contour of the target object is highlighted in color, so that the user knows which object has been jumped to. Previous highlights are replaced.
`add highlight`	The contour of the target object is highlighted in color, so that the user knows which object has been jumped to.

	Previous highlights are retained.
`full view + new highlight`	All objects in the file are displayed centered in the Arbortext IsoView window. The contour of the target object is also highlighted in color, so that the user knows which object has been jumped to. Previous highlights are replaced.
`zoom + new highlight`	The target object is displayed centered in the Arbortext IsoView window. The precise area is displayed which was defined earlier for the extent. The contour of the target object is also highlighted in color, so that the user knows which object has been jumped to. Previous highlights are replaced.
`move + new highlight`	The target object is displayed centered in the Arbortext IsoView window, its size is unaffected. The contour of the target object is also highlighted in color, so that the user knows which object has been jumped to. Previous highlights are replaced.
`full view + add highlight`	All objects in the file are displayed centered in the Arbortext IsoView window. The contour of the target object is also highlighted in color, so that the user knows which object has been jumped to. Previous highlights are retained.
`zoom + add highlight`	The target object is displayed centered in the Arbortext IsoView window. The precise area is displayed which was defined earlier for the extent. The contour of the target object is also highlighted in color, so that the user knows which object has been jumped to. Previous highlights are retained.
`move + add highlight`	The target object is displayed centered in the Arbortext IsoView window, its size is unaffected. The contour of the target object is also highlighted in color, so that the user knows which object has been jumped to. Previous highlights are retained.

Targets

As with normal Internet pages, you can also define a target from a link in an illustration. A container is defined as the target. Containers include windows, frames or Arbortext IsoView itself. There are several options:

`Standard`	The target is displayed in the same container in which the link was activated.
`IsoView`	The target is displayed in Arbortext IsoView if possible. This replaces the current illustration.
`Frame`	The target is displayed in the HTML frame containing Arbortext IsoView.

`Parent Frame`	The target is displayed in the parent of the HTML frame containing Arbortext IsoView.
`Whole Page`	The target is displayed in the window containing Arbortext IsoView. The contents of the window, together with any existing frames, are replaced.
`New Window`	The target is displayed in a new window.
`Frame...`	The target is displayed in an existing frame. If you select this option, a dialog box will appear where you can enter the name of the required frame.

URI

You can also click an object to jump to any address on the Internet. This is done by means of a URI (Unique Resource Identifier) which you might be familiar with from Web browsers. A typical examples is `http://www.ptc.com/de/index.htm`. The URI consists of the following components:

`http://`	Specifies the protocol, `http://` for normal Web addresses, `ftp://` for FTP servers
`www.ptc.com`	Specifies the server on which the file being searched for is located.
`/de/`	Specifies a subdirectory
`index.htm`	An HTML file to be displayed.

A special form of URI is the `file://` protocol. This is used to select files on your own hard disk; e.g., `file://D:/web/index.htm`. The individual components are as follows:

`file://`	Specifies the protocol
`D:/`	Drive letter
`/web/`	Specifies a subdirectory
`index.htm`	An HTML file in this directory.

Specifying the protocol is optional - it will be added if required. Any type of file that you can display on your Internet browser can be specified, e.g. HTML or PDF files.

In the **Object info** dialog box, choose **Hyperlink ▸ URI**. The following dialog box appears:

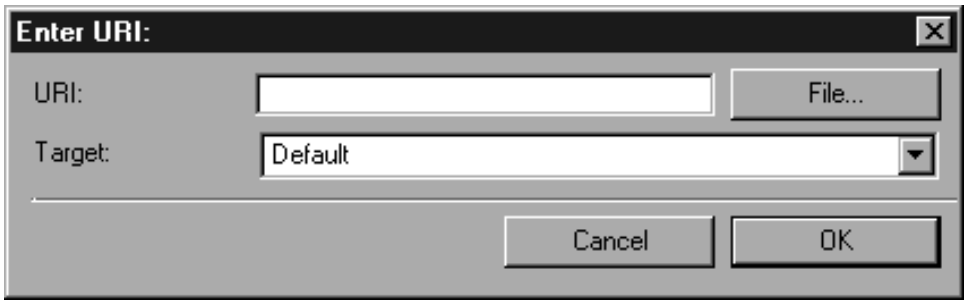

Enter the chosen address in the **URI** field. If you want to jump to a file on your local disk, click **File**. You can then select the file you require.

Setting the target allows you to define what exactly is to happen if the object jumps to this viewport. These settings relate to subsequent usage in interactive environments.

Clicking **Cancel** terminates the URI entry without performing any changes. Clicking **OK** confirms your selection. The selected URI is displayed in the object info.

Animation

You can use an object to start and stop another object's animation. Clicking the current object will control the target object's animation. To select the target object: In the **Object info** dialog box, choose **Hyperlink ▸ Animation**. The **Select Animation** dialog box appears:

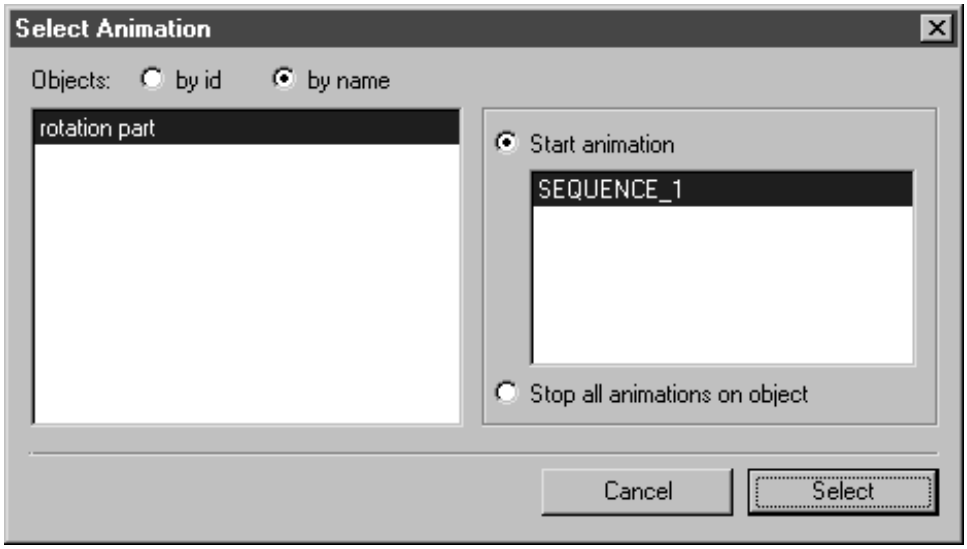

Objects

All animated objects are displayed in the left display window. You can specify whether object IDs or names appear in the display window by clicking on the button next to **by id** or **by name** respectively.

When you click on an entry, the object's animation sequences appear in the display window on the right.

Start Animation

This option is the default setting. If you select one of the displayed sequences, playback of this target object sequence is started via the current object.

The selected object must be prepared for remote start. Further information on this can be found in Edit Animation on page 241.

Stop All Animations on Object

If you select this option, the entire target object animation is stopped during playback via the current object.

If target object actions have been selected for the current object, the names of the target objects and the relevant sequences appear under **Hyperlink**.

Other Attributes

If you use the **Select DTD** command on the **Objects** menu to select a different document type definition file, different or additional object types and attributes may appear in the **Object info** dialog box. (See Select DTD on page 294.)

For example:

If you select **webcgm21** in the **Select DTD** dialog box, the additional **visibility** and **interactivity** attributes appear.

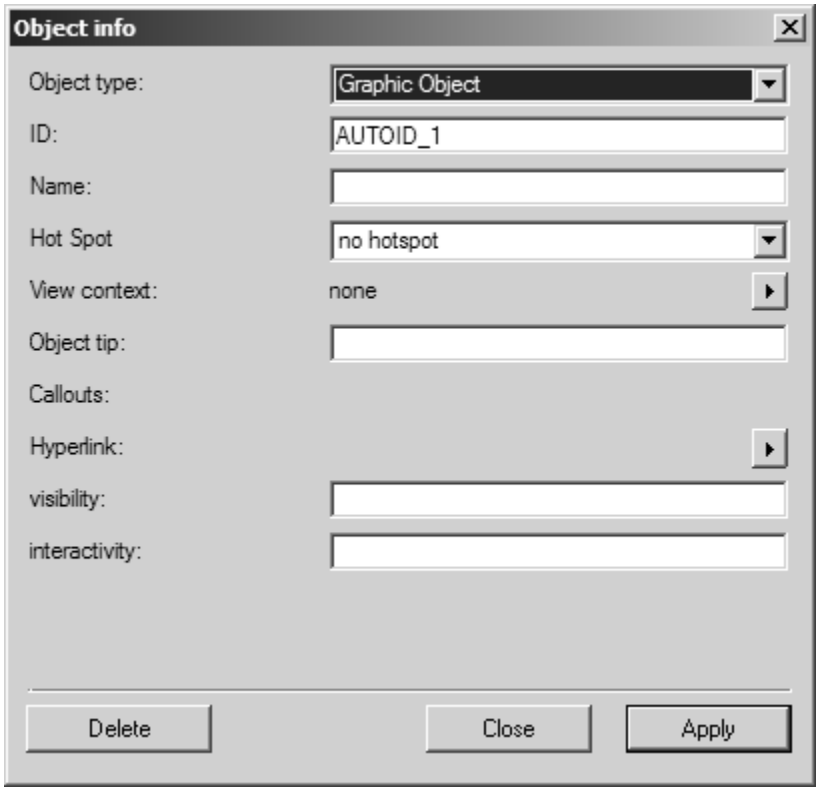

If you select **catalog** in the **Select DTD** dialog box, and then select **part** in the **Object type** field in the **Object info** dialog box, a list of several additional attributes appears.

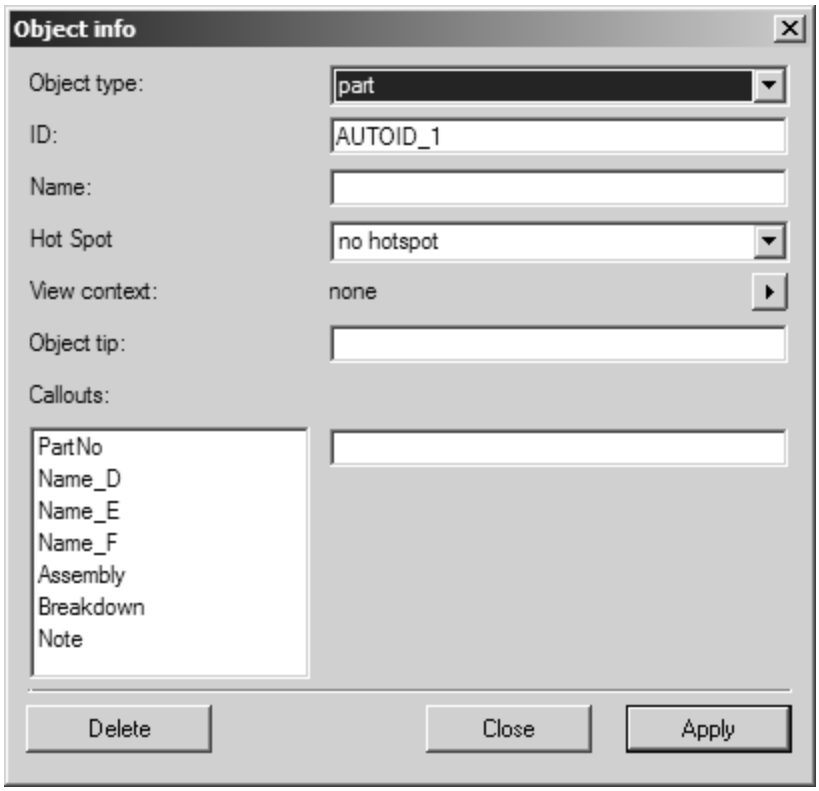

To enter a value for an attribute in the list, click the attribute name and then enter the value in the box to the right of the list.

Delete

Clicking **Delete** removes object info. Any hotspots and their links and animations created for the object are also deleted. If animations are in place, a caution window appears, where you must confirm that the object info is to be deleted.

Note

If you ungroup a group to which object info has been assigned, this object info will also be lost. If you only want to make minor changes in the group, use the ***Direct Selection*** *tool without ungrouping the group.*

Confirm all changes made in the **Object info** window by clicking **OK**. Clicking **Cancel** closes the dialog box without making any changes.

Show in Object Window

This **Objects** menu command is used to highlight a selected object in the object window. It enables you to find the name or ID of an object easily, particularly for drawings with many objects.

Select the required object. Select the command. The **ID** or **Name** of the object is then highlighted in the object window in accordance with the setting.

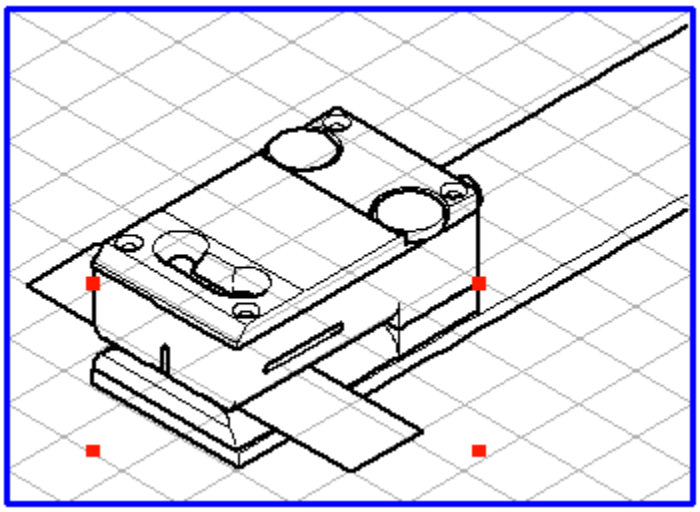

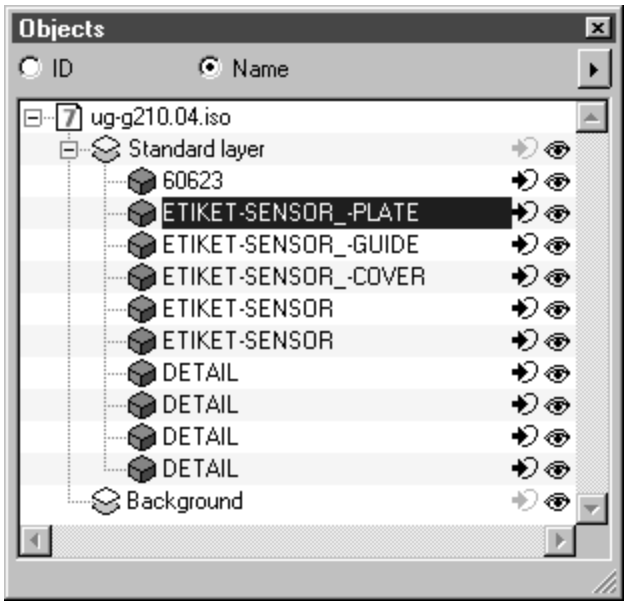

If the selected object contains other objects (groups or elements), the whole object structure of the selected object is shown. You can see all the nested subordinate objects in the object window.

If you want to find the name of an element or a group with object information that is located within an object group, select the direct selection cursor. Click inside the object group. An element is selected. If you then hold down the CTRL key while clicking again at the same place, the lowest group is selected. Each click after that selects the next highest group. When red selection rectangles appear instead of the empty rectangles, you have reached the highest level of the group hierarchy.

You can display every selected subgroup in the object window with this command.

If you know the name of a component but not where it is located on the drawing, click on the name in the object window. The object is selected in the drawing. For a description of these and all other functions relating to the object window, see Show Object Window on page 427.

Delete Object Info

This command allows you to delete any existing object info for the selected elements.

Do this by selecting the elements whose object info you want to delete. Then select the **Delete object info** command. The following dialog box appears:

This shows how many elements have been changed by this command.

Clicking **Delete** removes object info. The hotspot and its links are also deleted.

Note

If you ungroup a group to which object info has been assigned, this object info will also be lost. If you only want to make minor changes in the group, use the ***Direct Selection*** *tool without ungrouping the group.*

Create Hotspots

This **Objects** menu command allows you to generate hotspots automatically for text elements. This can be useful, for example, if you want to use part numbers on a spare parts diagram as hotspots.

This function searches for selected text elements. If these do not yet have object info, new object info will be created. The content of the text element is used as the name for the objects you create in this way. The hotspot area for this object will also be generated.

First select the elements which you want to assign hotspots to. This function only takes into account text elements, other selected elements will be ignored. If you want to process all text elements, simply use the **Select all** command. Then select the **Create hotspots** command. The following dialog box appears:

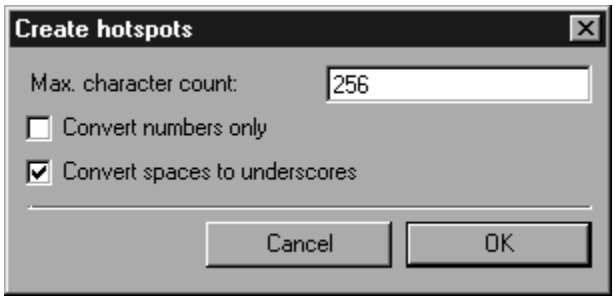

Maximum Character Count

Here you can specify the maximum number of characters of the text element you want to use for the name. With a complete text section, for example, only the first characters will be used to form the name.

Convert Numbers Only

In addition to part numbers, many illustrations also have texts which contain other references. If you enable this box, only those text elements which only contain numbers will be processed. If the box is not enabled, all text elements will be processed.

Convert Spaces to Underscores

Many text elements contain spaces. If these spaces are used in a name, this can result in problems later if the file is used in an interactive environment. If you enable this box, all spaces will be converted to underscores. Otherwise, the text will not be changed.

Clicking **Cancel** terminates the function. Click **OK** to execute the function. The following dialog box appears after processing has been completed:

This shows how many text elements have been processed.

Edit Animation

You can animate 2D and 3D objects in your drawing, including:

- Element objects
- Surface objects
- Group objects

If you want to animate elements in your drawing, convert them to objects first by assigning object information to them.

Note

You can animate a group object even if it contains elements that are not objects.

About Editing Animations

To edit animation for objects in your drawing, click the **Objects** menu, and then click **Edit animation**. After you click **Edit Animation**:

- All selected elements (that are not objects) are de-selected.
- All selected objects remain selected.
- The **Edit Animation** and **Timeline** dialog boxes both open as shown below.

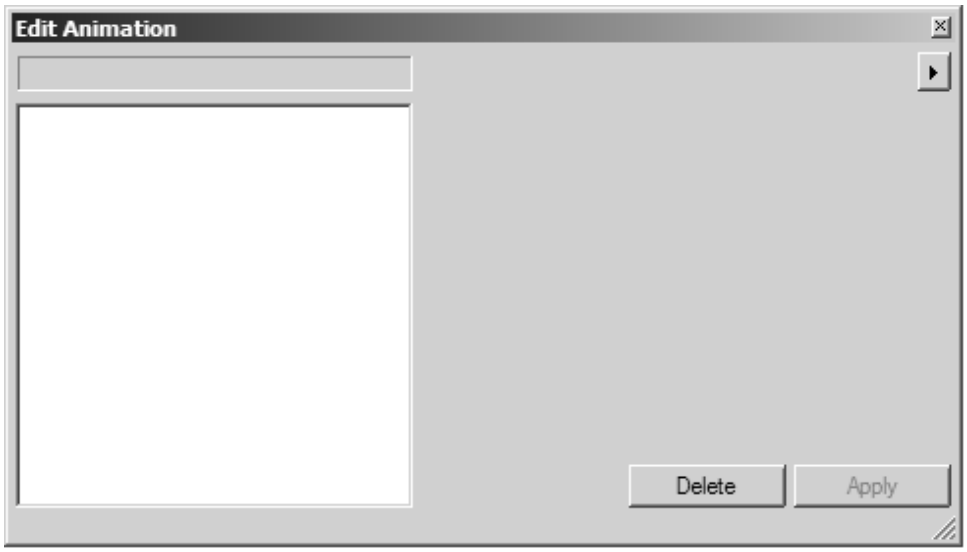

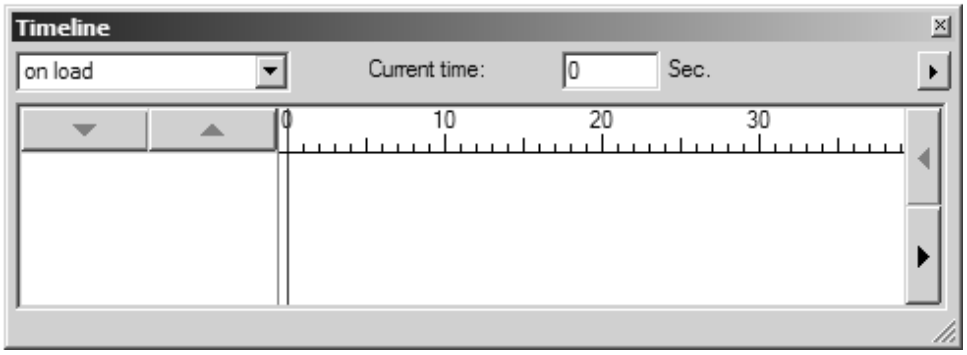

  - The **Edit Animation** dialog box lets you edit animated sequences applied to objects.
  - The **Timeline** dialog box shows the animation sequences for each object in chronological order.

While the **Edit Animation** and **Timeline** dialog boxes are open:

- You can only select objects in the drawing. You cannot select non-objects.
- You can only select tools and commands that affect the animation. All other (2D mode or 3D mode) tools and commands are unavailable.

As mentioned above, an animation is made up of sequences. You can have as many sequences as you want. Each sequence can incorporate pauses and steps. You can have as many pauses and steps within a sequence as you want. Each step contains `0` to *n* actions that are executed simultaneously. Actions are transformations or attribute changes applied to an object.

The following description covers the dialog box options that you can use when creating your animation. The exercises in *Drawing Basics Tutorial* and *3D Mode Tutorial* provide a useful starting point for getting to know the tools and setting options in the dialog boxes.

The last part of this section provides further information on special points that should be noted when creating 2D and 3D animations for an object.

Starting the Animation Process

When the **Edit animation** command is selected, the **Edit Animation** and **Timeline** dialog boxes appear and are empty.

To begin creating an animation, you must first select an object. To do this, click the object with the arrow cursor, or click on the object's ID or name in the object window.

If you now select one of the available transformations, the dialog boxes appear as illustrated here:

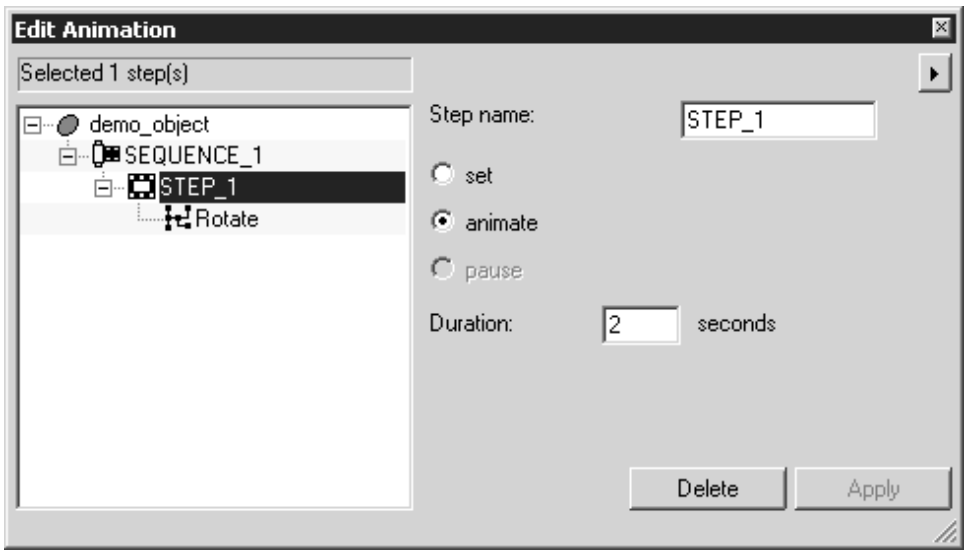

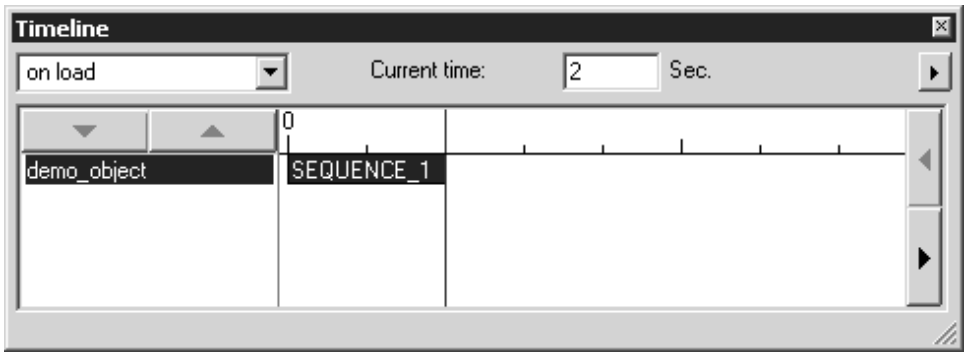

The upper field of the **Edit Animation** dialog box shows either the ID or name of the animated object. (What is shown depends on the current **Objects** window setting; **ID** or **Name** .) Below this is the first sequence that has been created, along with the first step. The step contains the action of the transformation that was selected – in this case, rotating the object.

Click the **+** or **-** symbol next to a sequence or step to expand or collapse it. Expanding a sequence shows all the steps it contains. Expanding a step shows all the actions it contains.

If you make changes to the setting options for sequences, steps, or actions, the **Apply** button becomes available. Changes are only applied when you click **Apply**.

The name or ID of the object appears on the left in the **Timeline** dialog box. The field next to this shows the timeline at a specified scale. The sequence that has been created appears as a bar with a name. The length of the bar corresponds to the sequence duration. The red timeline indicates the current time and, therefore, the point when the next animation begins.

Sequence Setting Options

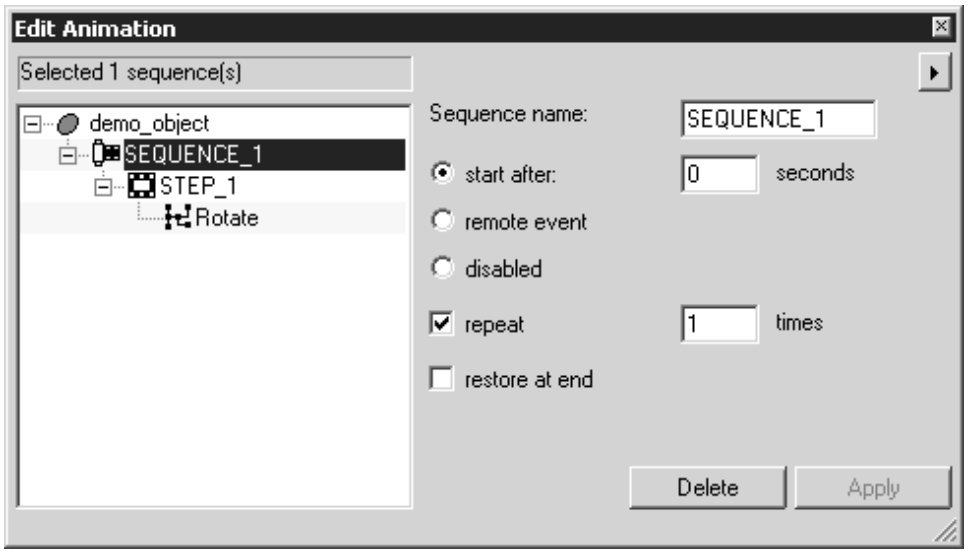

Sequence Name

The name of the selected sequence appears here. You can change this name. If you change it, the **Apply** button becomes available.

Start After

When you have created a sequence, this is where you can specify when the sequence is to begin during the animation's playback. The sequence will start at the point in time that is entered. It is possible to change this start time. When it has been changed, the **Apply** button becomes available. The amended start time is indicated in the **Timeline** dialog box. The sequence bar is moved accordingly on the axis.

The start time for the first sequence can be set as you wish. When entering start times for any subsequent sequences you must ensure that no other sequence exists for the desired start time. The sequences created for an object cannot overlap. A sequence must end before the next sequence can start.

Remote Event

This option should be selected when the animation is to be started via another object or from a different application. To do this you must create a link. You can specify a link from an object to the target object with animation using the setting under **Hyperlink** ▸ **Animation** in the **Object info** dialog box. You can read more on this in Object Info on page 223. An example of a remote-operated animation can be found in the *Drawing Basics Tutorial*.

Disabled

This option disables the selected animation sequence, or sequences. If you select **disabled**, the sequence cannot be part of a master sequence. (See Remote Start Master Sequences on page 291.)

Repeat

If the selected sequence is to be repeated, check the box next to this option and enter the number of repetitions in the entry field. When the option has been selected, the **Apply** button becomes available.

The repetition is indicated in the **Timeline** dialog box. The sequence bar is extended to incorporate the prolonged duration of the sequence caused by the repetition. This part of the sequence bar is highlighted in light gray on the axis.

Restore at End

When selected, this option means that, at the end of the current sequence, the object is restored to the position it occupied at the start of the sequence. When the option has been selected, the **Apply** button becomes available.

Deleting and Applying Changes to Sequences

Delete

If you click this button, the selected sequence is deleted along with all its steps and pauses. This command cannot be undone.

Apply

If you click this button, the change made to the selected sequence is adopted.

Note

*The program automatically adopts a newly created sequence. The **Apply** button becomes available each time a sequence is changed. Changes are only adopted when this button is clicked. It is then grayed out again and becomes inactive. If you have not confirmed that a change is to be adopted, a message dialog appears, asking you to decide whether the change is to be adopted or not.*

Commands in the Edit Animation Menu

If you click on the arrow at the top right, the **Edit Animation** menu appears. The commands in this pop-up menu can be used to influence the animation in a number of ways.

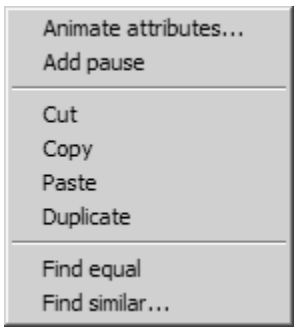

Animate Attributes

When you select this option, the following dialog box appears:

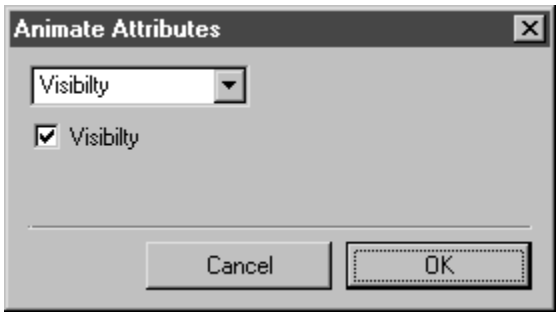

The pop-up menu offers a range of attributes that can be applied to an animated object. Each attribute that is selected is an action within a step. The action is implemented in the active sequence as a new step in line with the current time (the position of the timeline).

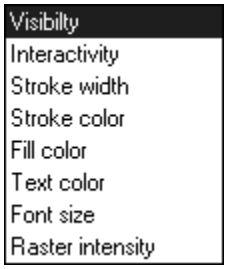

If the timeline is positioned at an existing step, the action is added on to this step. In this case, the attribute is animated. In other words, an area is gradually filled with a color throughout the duration of the step, for example.

If the timeline is outside the existing sequences, the action sets a new step as part of a new sequence.

Clicking **OK** confirms and adopts the attribute setting. Clicking **Cancel** returns you to the **Edit Animation** dialog box without any changes being adopted.

Visibility

In principle, an animated object is visible. If this attribute is implemented as an action when the **Visibility** box is unchecked, the object in question becomes invisible from the point during playback when the attribute was set. The `invisible` attribute continues to apply until a new action is generated with the attribute for visibility. If the box next to **Visibility** is checked, visibility has been selected.

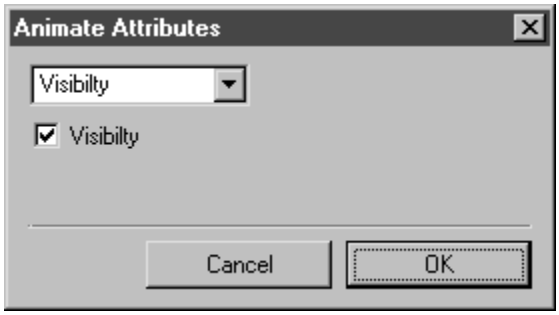

While editing in Arbortext IsoDraw , the contour lines and the colors of filled areas that belong to invisible objects are depicted in the selected grid color.

Note

Any elements on the drawing sheet that have been hidden using the ***Hide*** *command in the* ***Element*** *menu are also depicted in the selected grid color.*

Interactivity

If a link exists for the animated object, this attribute can be used to switch the link on and off.

In principle, interactivity is applied to an animated object. If this attribute is implemented as an action when the **Interactivity** box is unchecked, interactivity for the object in question is switched off from the point during playback when the

attribute was set. This attribute continues to apply until a new action is generated with the attribute for interactivity. If the box next to **Interactivity** is checked, the attribute will switch interactivity back on.

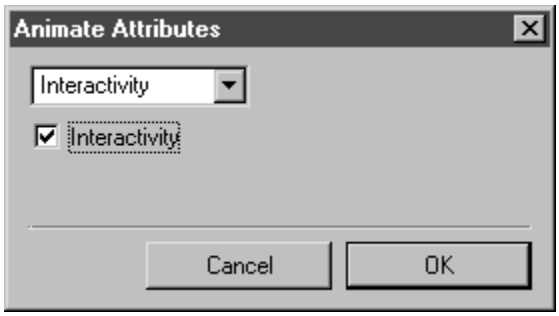

Stroke Width

This option involves converting the selected object's original contour line widths to a new value. Enter the value for the width of the contour lines next to **Value** in the dialog box. The width of all the lines are converted to the value entered here. If you click the box next to **as percentage**, the setting next to **Value** changes from **mm** to **%**. The numerical value entered indicates the percentage change of each original line width.

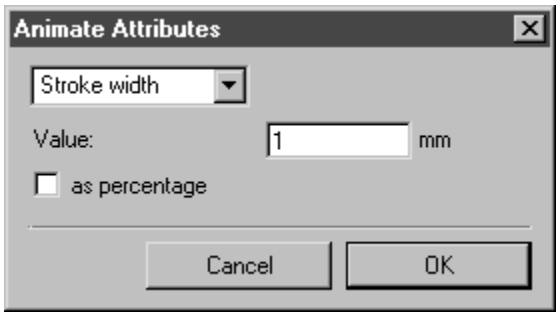

Stroke Color

This option involves converting the original color(s) of the object's contour lines to one new color. Click on the color field in the dialog box. Select the color from the subsequent **Color** dialog box. If no color is selected, the original color(s) are retained. If you click the box next to **as percentage**, you can specify the color's tone. Enter the percentage value in the entry field next to the color field.

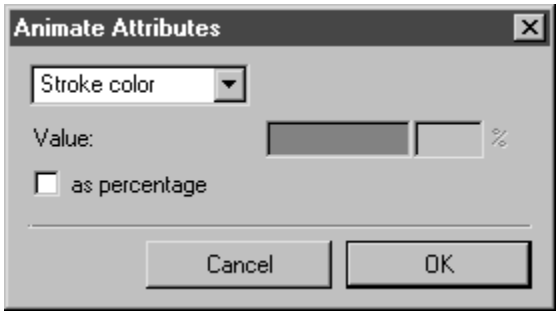

Fill Color

This option involves converting the original color(s) of the object's filled areas to one new color. Click on the color field in the dialog box. Select the color from the subsequent **Color** dialog box. If no color is selected, the original color(s) are retained. If you click the box next to **as percentage**, you can specify the color's tone. Enter the percentage value in the entry field next to the color field.

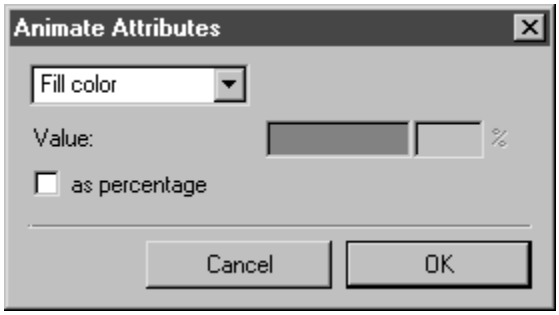

Text Color

This option involves converting the original color(s) of the object's text elements to one new color. Click on the color field in the dialog box. Select the color from the subsequent **Color** dialog box. If no color is selected, the original color(s) are retained. If you click the box next to **as percentage**, you can specify the color's tone. Enter the percentage value in the entry field next to the color field.

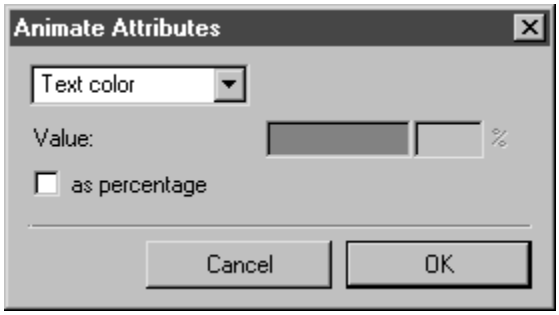

Font Size

This option involves converting the selected object's original font sizes to a new value. Enter the value for the font size next to **Value** in the dialog box. The font sizes of all the text elements are converted to the value entered here. If you click the box next to **as percentage**, the setting next to **Value** changes from **pt** to **%**. The numerical value that is entered will then set the percentage change of the original font size(s) of the text elements in the object.

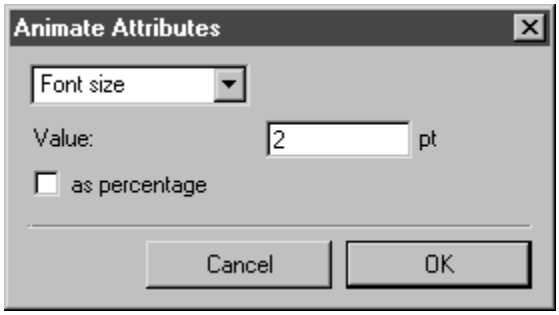

Raster Intensity

In the case of objects with raster data, this option can be used to reduce intensity. Enter the degree to which intensity is to be reduced as a percentage in the entry field next to **Value**. Intensity is reduced in line with the percentage entered. Entries exceeding 100 (**%**) are not adopted.

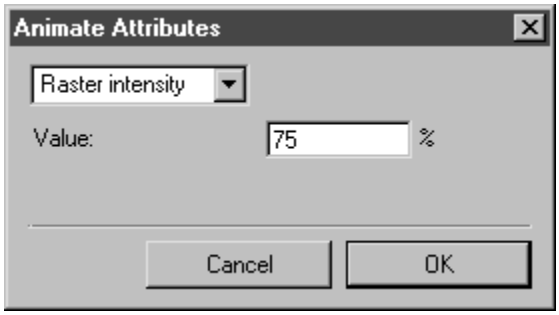

Add Pause

Select this command to insert a pause into the active sequence. To do this, it is important that the current time timeline (**Timeline** dialog box) is within the sequence and that the unoccupied period until the beginning of a subsequent sequence is available for the pause.

The current time setting determines where the pause occurs within the sequence. The duration of the pause is preset in line with the step duration settings on the dialog page for the **Edit ▸ Preferences** menu. When you click on a pause that has been generated, you can select from the pause options (see Setting Options for Steps and Pauses on page 257).

Arranging Animation Items

Use the **Cut**, **Copy**, **Paste**, and **Duplicate** commands on the **Edit Animations** dialog box menu to apply sequences, steps, actions, or pauses for one object to another, or to quickly create a duplicate sequence, step, action, or pause for the current object.

Note

*If you are only editing sequences, you can use the **Cut sequences**, **Copy sequences**, **Paste to current time**, and **Duplicate sequences** commands on the **Timeline** dialog box context menu. (See Arranging Sequences on page 283.)*

Duplicate Sequences

This command is used to duplicate the selected sequence. If you click the relevant sequence then select this command, a duplicate appears below it with the suffix “Copy” added to the sequence name.

In order that a sequence can be duplicated, the timeline in the **Timeline** dialog box must be set so that the sequence is starting at an unoccupied point in time and so that the duration of the sequence is also unoccupied. If necessary, a new start time will need to be set for the subsequent sequence.

The following figure depicts the timeline at the end of **SEQUENCE_1**. Prior to duplication, the time zone after **SEQUENCE_1** was unoccupied. This means that the conditions for duplication were met. Following duplication the sequence bar for the copy is set.

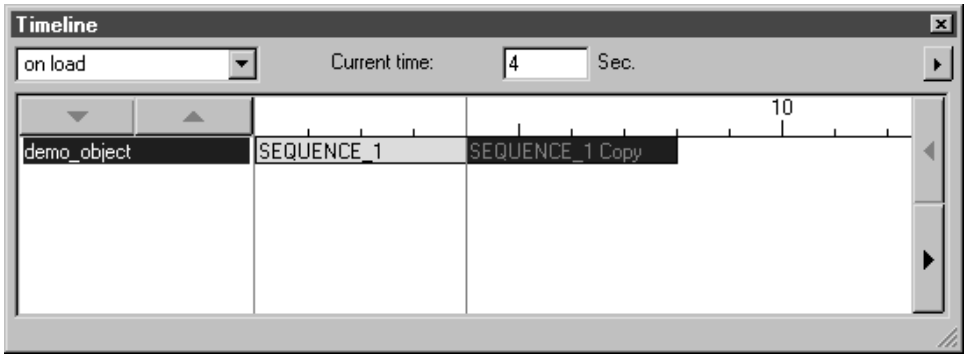

Find Equal or Find Similar Animation Items

While (exactly) one animation item (sequence, step, or action) is selected, you can click the **Find equal** or **Find similar** command on the **Edit Animation** dialog box menu to extend the selection to all equal or similar animation items of the same type (sequence, step, or action).

Note

*The **Find equal** and **Find similar** commands are not available while multiple animation items are selected.*

- **Find equal** selects all animation items that have exactly the same settings as the animation item you selected.
- **Find similar** opens the **Find Similar** dialog box so you can specify which settings to match for the animation item you selected. After you specify the settings to match and click **OK**, **Find similar** selects all animation items (of the same type) that have the specified matching settings.

For example, use **Find Equal** and **Find similar** if you want to concurrently peforrm any of the following tasks on multiple equal or similar animation items:

- Assign one attribute or setting value to multiple equal or similar animation items (sequences, steps, or actions).
- Select multiple equal or similar sequences, steps, or actions to cut, copy, move, or delete.
- Create a collection of equal or similar sequences.

Determining if Animation Items are Equal or Similar

In general, two or more animation items are:

- "Equal" if they are all the same type and all their settings match. (See Find Equal Animation Items on page 254.)
- "Similar" if they are all the same type and all settings selected in the **Find Similar** dialog box match. (Settings that are cleared in the **Find Similar** dialog box are ignored. See Find Similar Animation Items on page 255.)

Find Equal Animation Items

To find equal sequences, steps, or actions (animation items):

1. In the **Edit Animation** dialog box animation item tree, click the animation item you want to find equals for.
2. Click the arrow in the top right corner of the dialog box to open the **Edit Animation** menu.
3. Click **Find Equal**. The selection is extended to all equal animation items. (The number of selected items is shown in the box above the tree.)

Example

Conditions for Equal Sequences

A sequence is equal to another sequence if all of these sequence values and settings match:

- **start after** time value (for **on load** sequences)
- **Duration**
- **Sequence name** (the names must match exactly)
- Sequence type: **on load**, **remote event**, or **disabled**; 2D or 3D; placed or not
- **restore at end** (selected or cleared)
- **repeat** value

Example

Conditions for Equal Steps

A step is equal to another step if all of these step values and settings match:

- **start after** time value for the parent sequence (for **on load** sequences)
- **Duration** value
- **Step name** (the names must match exactly)
- Step type: **set**, **animate** or **pause**
- Parent sequence type: 2D or 3D; placed or not

Example

Conditions for Equal Actions

An action is equal to another action if all of these action values and settings match:

- **start after** time value for the parent sequence/step (for **on load** sequences)
- **Duration** value for the parent step (even if **Duration** value is zero)
- Action type: attribute or transformation
  - Attribute or transformation type
  - Attribute or transformation values and settings

Find Similar Animation Items

Find similar opens a dialog box that lets you specify which values and settings to match for the animation item you selected. After you specify the values and settings to match and click **OK**, Arbortext IsoDraw selects all animation items that have the specified matching values and settings.

To find similar sequences, steps, or actions (animation items):

1. In the **Edit Animation** dialog box animation item tree, click the animation item you want to find similar animation items for.
2. Click the arrow in the top right corner of the dialog box to open the **Edit Animation** menu.
3. Click **Find Similar**. The **Find Similar** dialog box appears with values and settings for the animation item type you selected.
4. In the **Find Similar** dialog box:
   - Select the check boxes for values and settings you want to match.
   - Clear the check boxes for values and settings you want to ignore.

(See Find Equal Animation Items on page 254 for the conditions used to match specified values and settings in the **Find Similar** dialog box.)

Example

Find Similar dialog box for sequences (default):

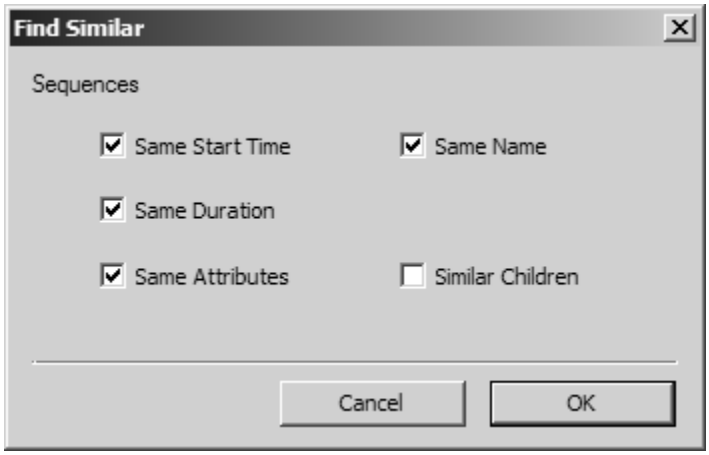

Example

Find Similar dialog box for steps (default):

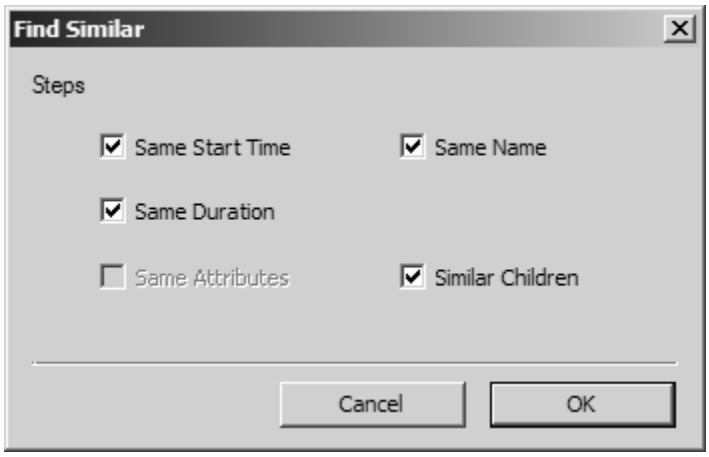

Example

Find Similar dialog box for actions (default):

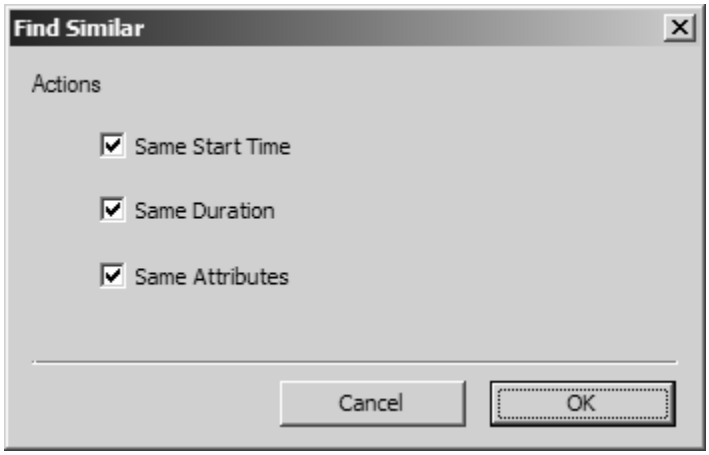

Creating Sequences

The first sequence of an animation is generated when the first action is created. A new sequence is always generated when an action is set and the timeline (current time) is at least at the end of an inactive sequence.

Setting Options for Steps and Pauses

For Steps

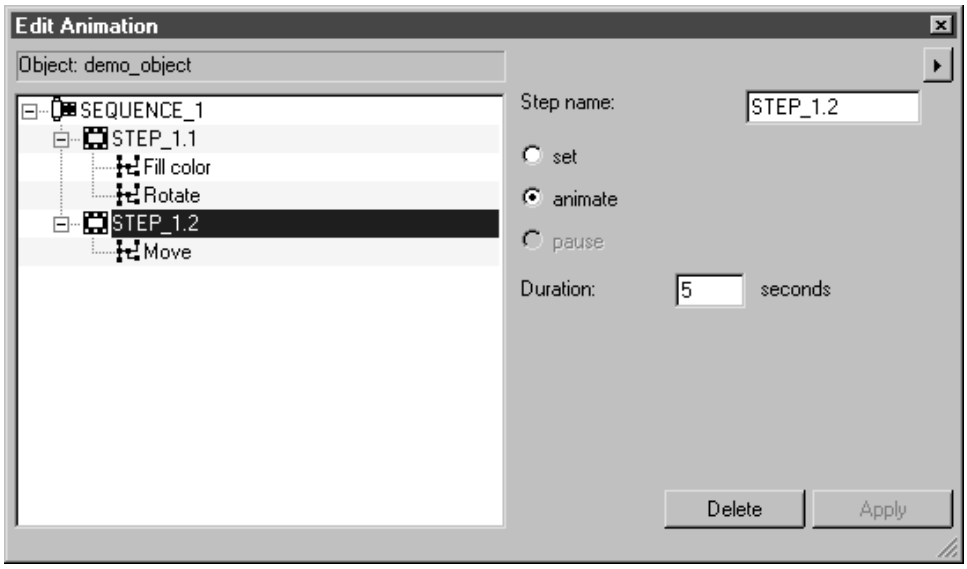

Step Name

The name of the selected step appears here. It is possible to change this name. When it has been changed, the **Apply** button becomes available.

Set

Selecting this option means that the step and its actions are executed directly when the animation is played back. When the option has been selected, the **Apply** button becomes available.

Animate/Duration

In contrast to the **set** option, when **animate** is selected, the step's animation and its actions are implemented over a specific period. The period is specified by the value next to **Duration**. This **animate** option is the default setting. When a step is created, the default duration value is applied, in line with the entries on the **Animation** dialog page under the **Preferences** menu command. You can alter the value in the entry field. When it has been changed, the **Apply** button becomes available. The step duration value you enter must not exceed the period of unoccupied time that is available.

For Pauses

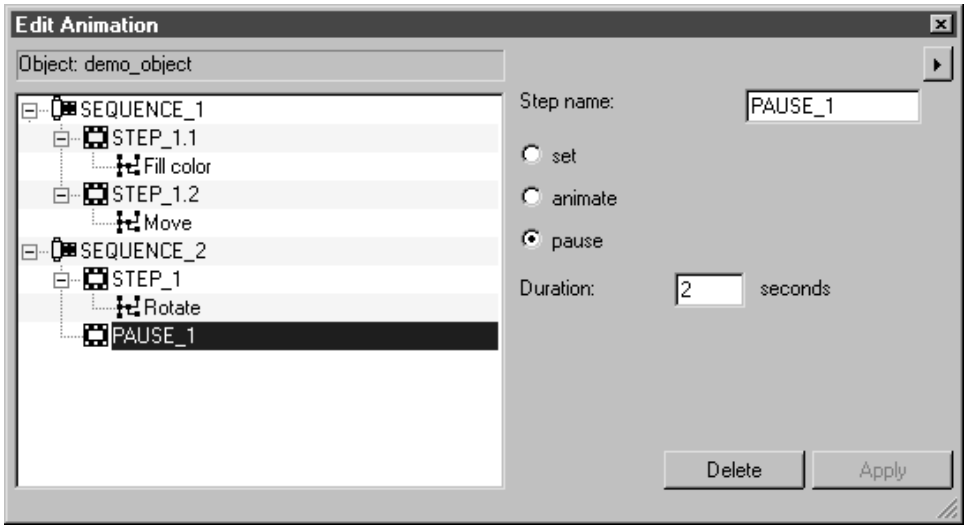

Step Name

The name of the selected pause appears here. It is possible to change this name. When it has been changed, the **Apply** button becomes available.

Set

When this option is selected, the **pause** and **Duration** options are inactive. When dealing with a pause, it is not recommended to use **set**, as a pause is usually intended to occupy a period without any actions.

Animate

In contrast to the **set** option, when **animate** is selected the animation runs for a specified period. As a pause does not contain an action, selecting **animate** by clicking **Apply** converts it back to **Pause**.

Pause/Duration

A pause is usually inserted into a sequence to occupy a period without any actions. However, as in the case of a step, actions can be set in a pause.

When a pause is created, the default duration value is applied as specified on the **Animation** dialog page under the **Preferences** menu command. You can alter the value in the entry field. When it has been changed, the **Apply** button becomes available. The pause duration value you enter must not exceed the period of unoccupied time that is available. A figure must be entered for the pause duration. When it has been changed, the **Apply** button becomes available.

Execution Options for Steps and Pauses

Delete

Clicking this button deletes the selected step or pause. This command cannot be undone.

Apply

If you click this button, the change made to the selected step or pause is adopted.

Note

*The program automatically adopts a newly created pause or step. The **Apply** button becomes available each time a change is made. Changes are only adopted when this button is clicked. It is then grayed out again and becomes inactive. If you have not confirmed that a change is to be adopted, a message dialog appears, asking you to decide whether the change is to be adopted or not.*

Creating Steps and Pauses

Steps

A new step is created with a new action. You can read about the conditions under which a new step is created with a new action in Creating Actions on page 273.

Pauses

The point at which a pause is inserted is determined by the current time setting. Furthermore, the sequence for the current time setting must be active. A pause usually comes at the end of a sequence. If the current time is set at the end of the last sequence step, the pause is appended to it.

Inserting Steps and Pauses in an Active Sequence

Inserting a Step into an Active Sequence

The current time determines whether a step is inserted. If the timeline is at the end of the last step of a sequence, a step is added as a new action is created. If the timeline is at any other point within the sequence duration a new action is assigned to an existing step.

Inserting a Pause into an Active Sequence

The point at which a pause is inserted is determined by the current time setting. If the timeline is at the beginning of a step, the pause is inserted in front of this step. If the current time setting is at the end of one step and the beginning of another, the pause is inserted between the two steps. If the timeline is at the end of the last step of a sequence, the pause is appended there.

Note

In order to be able to insert steps and pauses there must be a sufficiently long section of the timeline that is unoccupied. You will be warned if there is not enough unoccupied space. The action or pause will not be implemented.

Arranging Steps and Pauses

Arranging Steps within a Sequence

Note

Steps and pauses are arranged in exactly the same way.

You can move a step or a pause within a sequence, thereby altering the order of the steps. To do this, click the name of the step, hold down the mouse button and drag the step over any other step. Now release the mouse button. The selected step is moved ahead of the step over which you positioned it.

If you drag a step over a sequence, it becomes the last step of the sequence.

In the following example, step 1 has been dragged over step 4. As a result, step 1 is then positioned in front of step 4.

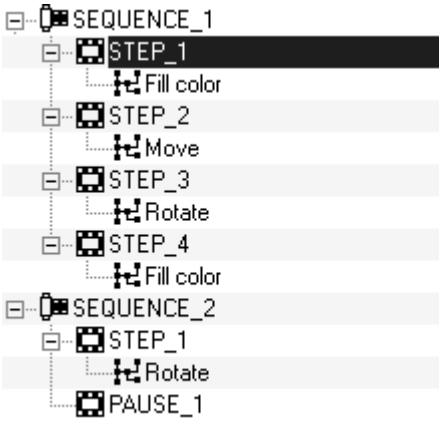

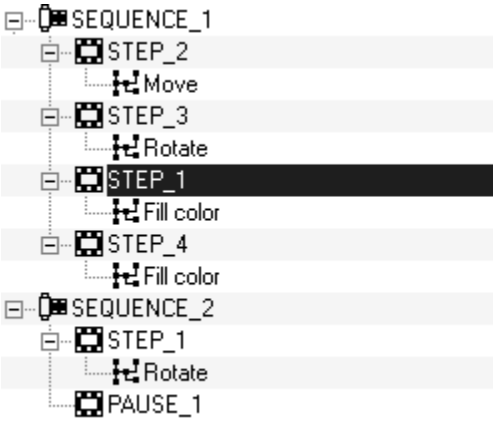

Assigning Steps to Another Sequence

You can also move steps and pauses to another sequence. When doing this, as explained above, you can also specify where in its new sequence the step should be placed in relation to the other steps. To do this, click the name of the step, hold down the mouse button and drag the step over any other step in any other sequence. Now release the mouse button. The selected step is now positioned in the desired sequence, ahead of the step over which you positioned it. If you release the mouse button over the sequence name, the step is inserted at the end of the sequence.

Note

When moving a step or pause to another sequence, none of the steps or pauses in the new sequence can have the same name as the step or pause you are moving. You must first change its name.

In the example, step 4 has been dragged from sequence 2 over step 1 in sequence 1. As a result, step 4 is then positioned in front of step 1.

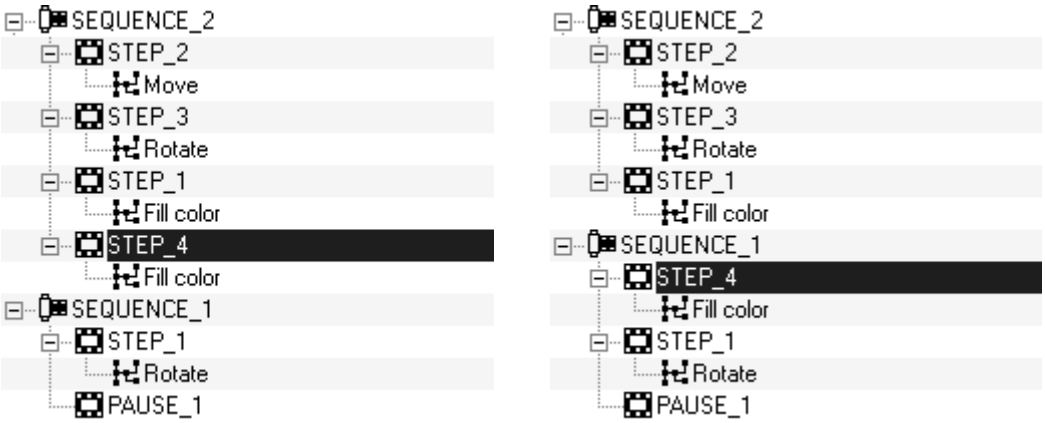

Setting Options for Actions with Transformations

Applies to Arbortext IsoDraw CADprocess only.

You can implement the following transformations for animations:

- Moving with the arrow cursor
- Moving with the **Move** menu command
- Rotating
- Scaling
- Shearing (only possible in 2D animations)

The tools work the same way as under normal conditions. This applies for both 2D and 3D animations.

If you click an action with a transformation, the dialog box for this transformation appears. The current setting values are displayed. You can alter these values. Clicking the **more** button opens the dialog box for the relevant transformation. You can change the transformation values here, too. In the case of the **Rotate**, **Scale**, and **Shear** transformations, you can specify the center point for the transformation via the **center** button.

Moving in 2D Animation

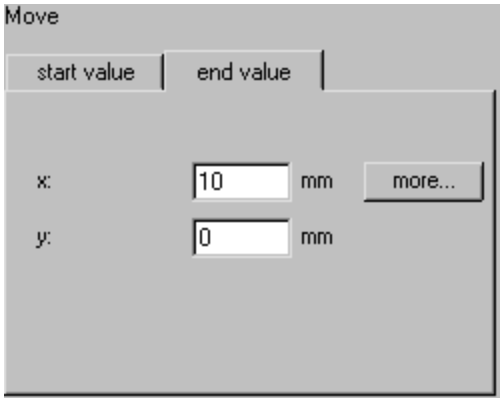

Start Value – End Value

Clicking on the relevant tab activates the displays for start or end values. You can change the values indicated in the entry field for moving in direction **x** and direction **y**.

More

Selecting this button opens the **Move** dialog box you are already familiar with. The relevant values (start or end value) are displayed. You can alter these values in this dialog box.

Clicking **OK** returns you to the original move dialog box. The new values you entered in the **Move** dialog box are now indicated here.

Moving in 3D Animation

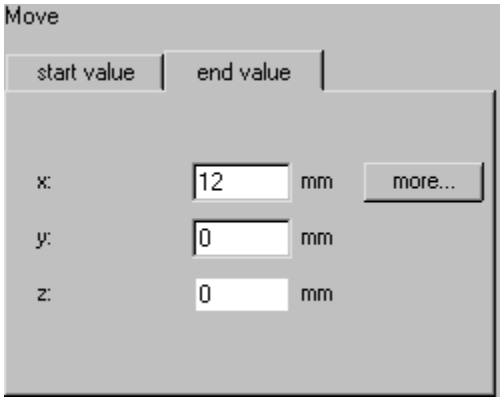

Start Value – End Value

Clicking on the relevant tab activates the displays for start or end values. You can change the values indicated in the entry field for moving on the 3 coordinate system axes **x**, **y**, and **z**.

More

Selecting this button opens the **Move** dialog box you are already familiar with. The relevant values (start or end value) are displayed. You can alter these values in this dialog box.

Clicking **OK** returns you to the original move dialog box. The new values you entered in the **Move** dialog box are now indicated here.

Rotating in 2D Animation

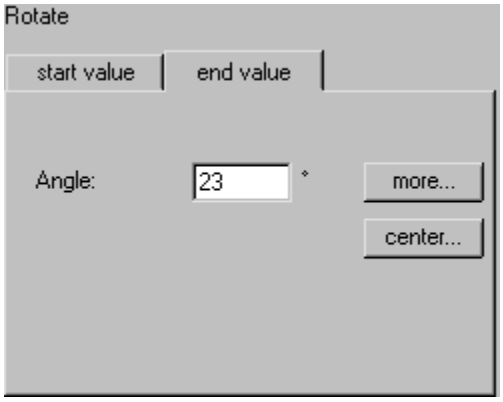

Start Value – End Value

Clicking on the relevant tab activates the displays for start or end angle. You can change the rotation angle indicated in the relevant entry field.

More

Selecting this button opens the **Rotate** dialog box you are already familiar with. The relevant angle (start or end value) is displayed. You can alter this angle in this dialog box.

Clicking **OK** returns you to the original rotate dialog box. The new angle you entered in the **Rotate** dialog box is now indicated here.

Center

When creating the animation using the dialog box, the point in the drawing where you clicked is used as the center point. If you click anywhere on the drawing sheet a center point is generated at this point.

Clicking on the **center** button opens the following dialog box:

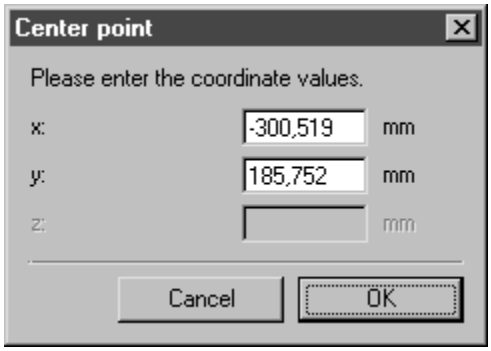

You can specify the coordinate values for the center point of rotation here. As the **x** and **y** coordinates have their origin at the bottom left of the drawing sheet, you can specify the center point precisely.

Rotating in 3D Animation

Applies to Arbortext IsoDraw CADprocess only.

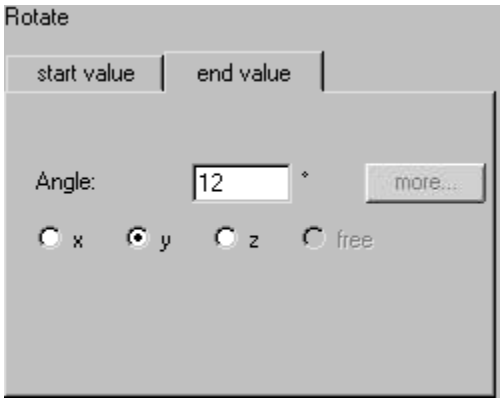

Start Value – End Value

Clicking on the relevant tab activates the displays for start or end angle. As well as indicating the rotation angle, the dialog box also indicates the coordinate system axis or free axis around which the object has been rotated.

Note

The free axis is active when it has been used for the ***Rotate*** *action. The three coordinate axes are then grayed out. It is not possible to change to one of these three axes. If one of the three coordinate axes has been selected, you can switch to another coordinate axis. The free axis is then grayed out and cannot be selected.*

You can change the rotation angle indicated in the relevant entry field. If you select an alternative rotation axis for the start or end angle, this newly specified axis is also adopted for the inactive angle (the start or end angle).

Scaling in 2D Animation

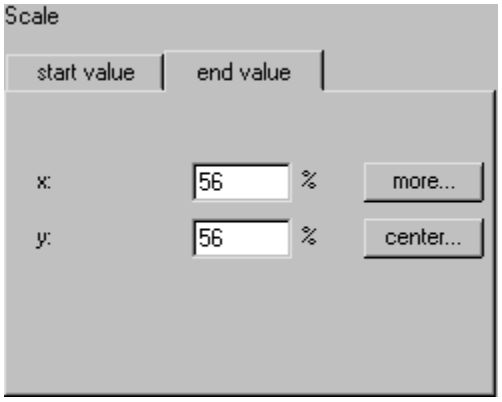

Start Value – End Value

Clicking on the relevant tab activates the displays for start or end values. You can change the values indicated in the entry field for scaling in direction **x** and direction **y**. If you want to scale proportionally, the values for both axes must be identical.

More

Selecting this button opens the **Scale** dialog box you are already familiar with. The relevant values (start or end value) are displayed. You can alter these values in this dialog box.

Clicking **OK** returns you to the original scale dialog box. The new values you entered in the **Scale** dialog box are now indicated here.

Center

When creating the animation using the dialog box, the point in the drawing where you clicked is used as the center point. If you click anywhere on the drawing sheet a center point is generated at this point.

Clicking on the **center** button opens the following dialog box:

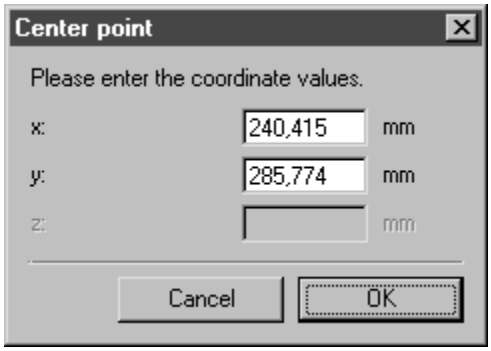

You can specify the coordinate values for the center point of scaling here. As the **x** and **y** coordinates have their origin at the bottom left of the drawing sheet, you can specify the center point precisely.

Scaling in 3D Animation

Applies to Arbortext IsoDraw CADprocess only.

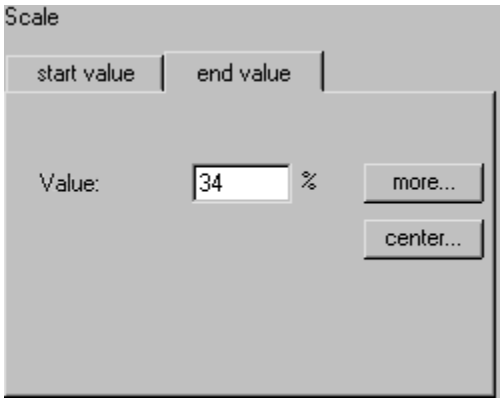

Start Value – End Value

Clicking on the relevant tab activates the displays for start or end values. You can change the scale value indicated in the relevant entry field.

More

Selecting this button opens the **Scale** dialog box you are already familiar with. The relevant value (start or end value) is displayed. You can alter this value in this dialog box.

Clicking **OK** returns you to the original scale dialog box. The new value you entered in the **Scale** dialog box is now indicated here.

Center

When creating the animation using the dialog box, the point in the drawing where you clicked is used as the center point. If you click anywhere on the drawing sheet a center point is generated at this point.

Clicking on the **center** button opens the following dialog box:

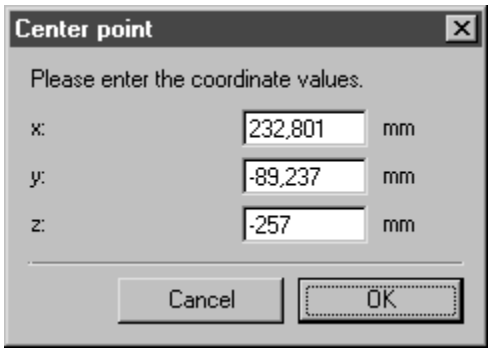

You can specify the coordinate values for the center point of scaling here.

Shearing in 2D Animation

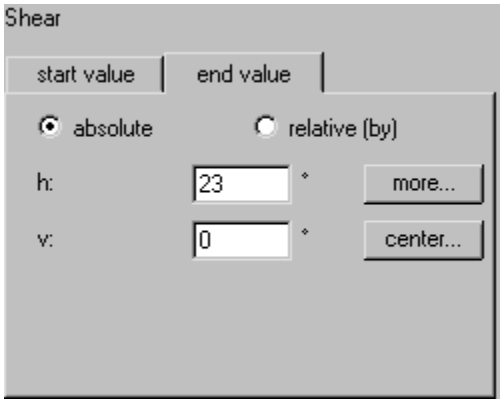

Start Value – End Value

Clicking on the relevant tab activates the displays for start or end values. You can change the angle indicated in the relevant entry field for shearing horizontally (**h**) and vertically (**v**).

More

Selecting this button opens the **Shear** dialog box you are already familiar with. The relevant angles (start or end value) are displayed. You can alter these angles in this dialog box.

Clicking **OK** returns you to the original shear dialog box. The new values you entered in the **Scale** dialog box are now indicated here.

Center

When creating the animation using the dialog box, the point in the drawing where you clicked is used as the center point. If you click anywhere on the drawing sheet a center point is generated at this point.

Clicking on the **center** button opens the following dialog box:

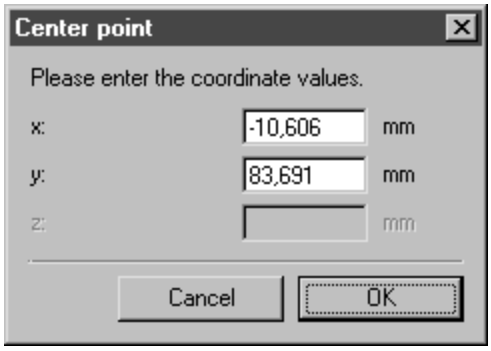

You can specify the coordinate values for the center point of scaling here.

Setting Options for Actions with Attributes

If you click an action with an attribute, the dialog box for this attribute appears. The current setting values are displayed. Clicking the **more** button opens the dialog box for the relevant attribute. You can implement changes here. You can find descriptions of the attribute dialog boxes in section **Commands** in the pop-up menu, Animate attributes”.

Note

*The **Animate attributes** command is only available for 2D objects.*

Visibility Attributes

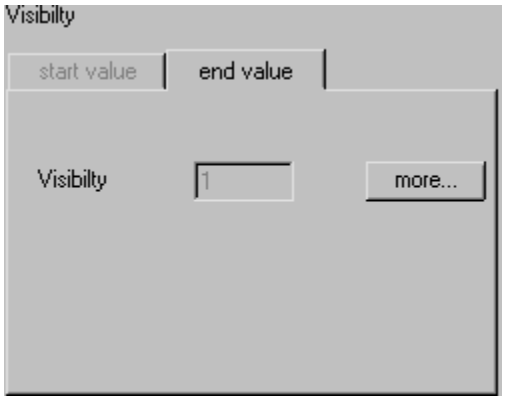

If a `1` is shown in the field next to **Visibility** the object is visible. If a `0` is shown, the object is invisible in the animation.

Interactivity Attributes

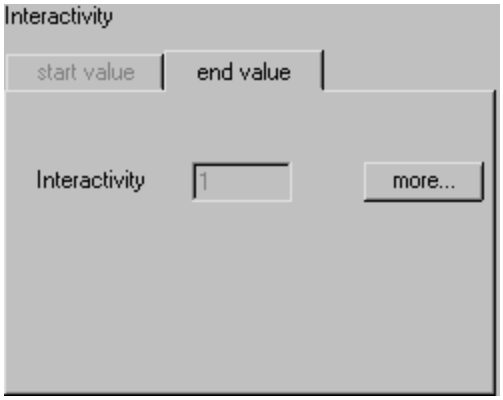

If a `1` is shown in the field next to **Interactivity** the object's interactivity is active. If a `0` is shown, the object's interactivity has been switched off.

Stroke Width Attributes

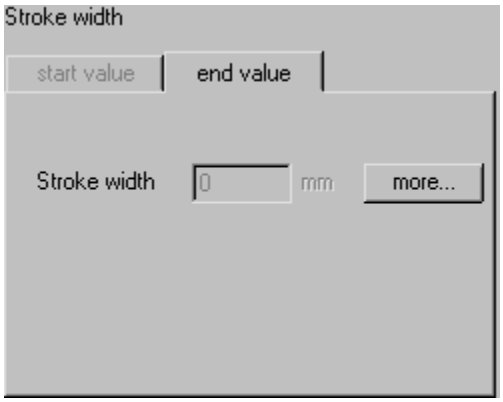

The current value for stroke width is indicated in the field next to **Stroke width** in **mm** or **%**. A value in **mm** applies to all of the object's lines. A value in **%** relates to the original width of the lines.

Stroke Color Attributes

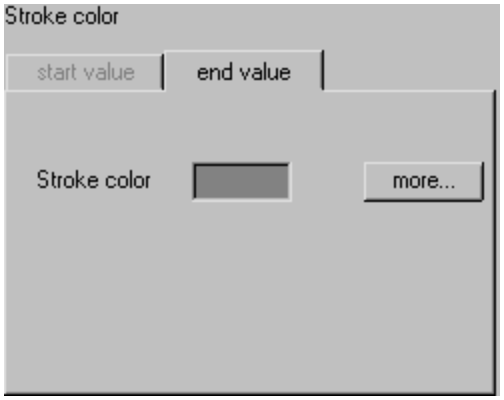

The current color that is applied to the object's lines is depicted in the field next to **Stroke color**.

Fill Color Attributes

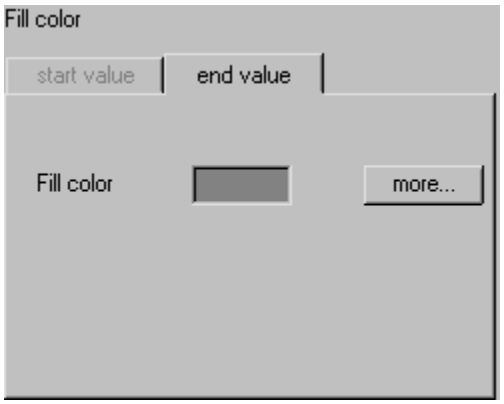

The current color that is applied to the object's filled areas is depicted in the field next to **Fill color**.

Text Color Attributes

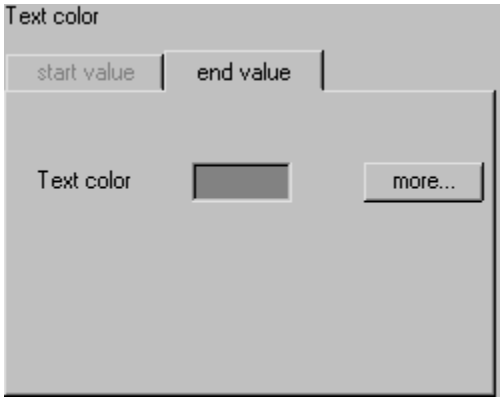

The current color that is applied to text within the object is depicted in the field next to **Text color**.

Font Size Attributes

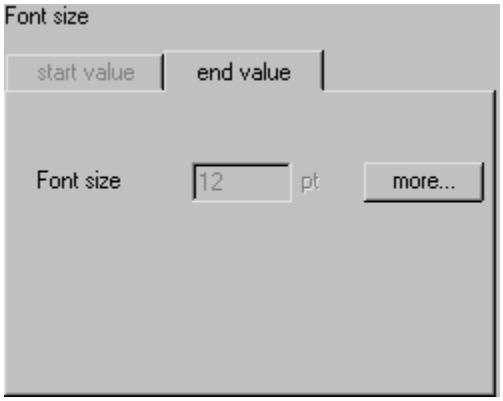

The current value for font size is indicated in the field next to **Font size** in **pt** or **%**. A value in **pt** applies to all text elements in the object. A value in **%** relates to the original font size of the text elements.

Raster Intensity Attributes

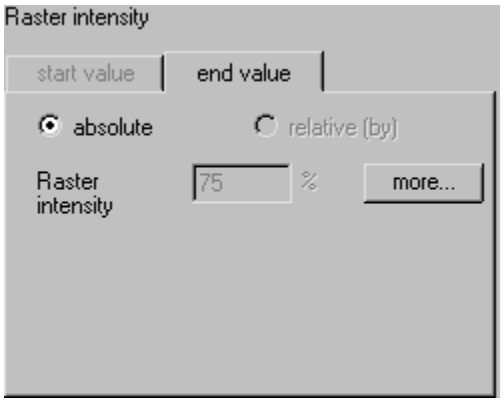

The current degree to which intensity has been reduced is indicated in **%** in the field next to **Raster intensity**.

Applying and Deleting Actions

Apply

Once you have selected the **more** or **center** button in a setting options dialog box, the **Apply** button becomes available. You must click the **Apply** button, even if you have not made any changes to the attribute. Clicking **Apply** means that changes are adopted in the selected action.

Delete

Clicking this button deletes the selected action. This command cannot be undone.

Creating Actions

When you start the animation process, the first action is assigned to the first step of the first sequence. If this sequence is active and the current time is at the end of the first step, the next action is assigned to a new step of the sequence. If the sequence is not active, the next action is assigned to a new step in a new sequence at the same current time. The next action is also assigned to a new step in a new sequence if the current time has been set to an unoccupied section. This applies irrespective of whether a sequence is active.

Inserting Actions in an Active Sequence

The point at which an action is inserted into an active sequence is determined by the current time setting. If an existing step begins at the selected time, the new action is assigned to the step. The same applies if an animated step is still taking

place at the selected time. In both instances, the new action is positioned as the last action in the step. If the last step in a sequence ends at the selected current time, the action created retrospectively is assigned to a new step.

Arranging Actions

Arranging Actions within a Sequence

You can move an action within a step in a sequence and from one step to another, thereby changing the order of the actions. To do this, click the name of the action, hold down the mouse button and drag the action over any other step. Now release the mouse button. The selected action is now inserted as the final action within the step. You can also drag the selected action over any other action within the sequence. When you release the mouse button, the selected action will be positioned ahead of the action over which you released the mouse button.

In the example, the action **Text color** has been moved over the action **Font size**. The action **Text color** is then positioned in front of the action **Font size**.

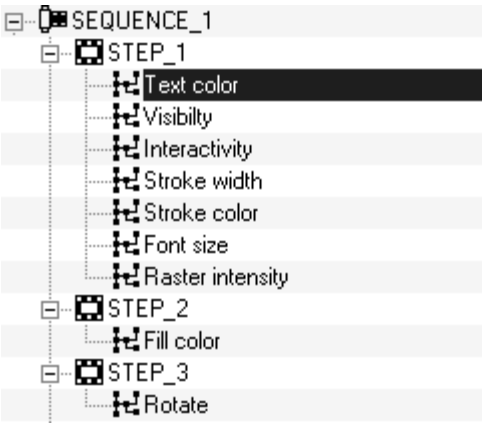

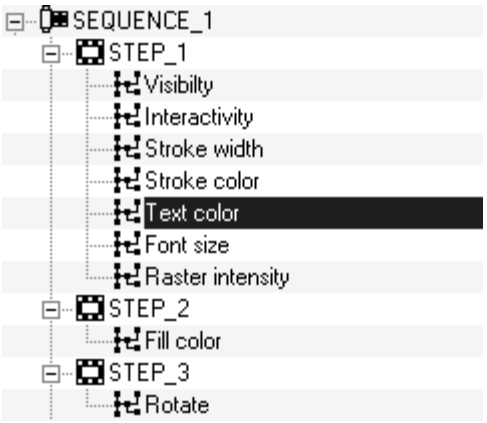

Assigning Actions to Another Sequence

You can also move an action to a different sequence. When doing this, as explained above, you can also specify where the action should be placed in relation to the other actions there. To do this, click the name of the action, hold down the mouse button and drag the action over any other step or any other action in any other sequence. Now release the mouse button. The selected action is now positioned at the intended place in the other sequence. As when moving within a sequence, where the action is inserted depends on whether you release the mouse button over a step or an action.

In the example, the action **Font size** from step 1 of sequence 2 has been dragged to the action **Rotate** in step 1 of the preceding sequence, `SEQUENCE_1`. The action **Font size** is then positioned in front of the action **Rotate**.

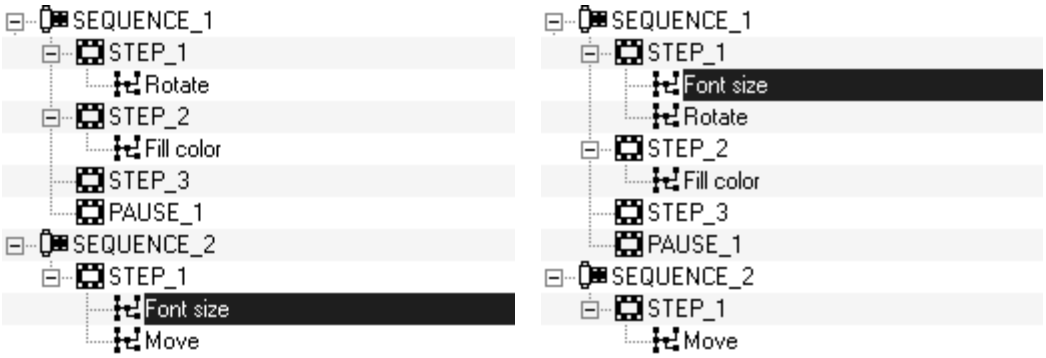

Note

When an action with an attribute is moved from a set step (no duration) to an animated step (with a duration), the attribute too becomes animated.

Timeline Dialog Box

Layout and Setting Options

This dialog box displays the current status of the animation as it has been created in the **Edit Animation** dialog box. Each time a change is made in the **Edit Animation** dialog box, the timeline is automatically updated.

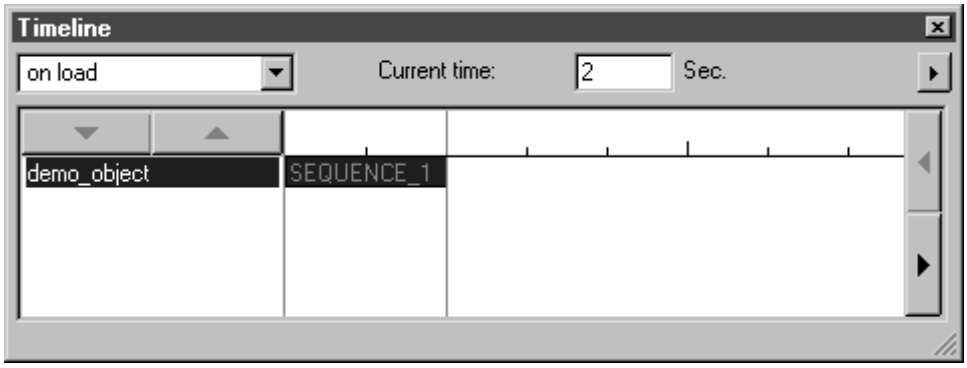

There is a pop-up menu with two options in the top left-hand corner of the box.

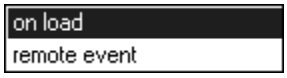

On Load

When this option is selected all object sequences that are played back by selecting the **Show in IsoView** command are displayed.

Remote Event

When this option is selected all object sequences that are initiated via an external link are displayed.

Object List

All animated objects are displayed in the left-hand column. The arrow buttons at the top of this column allow you to scroll through the object list.

Timeline

The right-hand column represents the timeline. This is where the animation sequences for all the file's objects are depicted in chronological order.

The timeline is divided into seconds. The scale for the timeline divisions is depicted on default as specified on the **Animation** dialog page for the **Preferences** menu command.

If you click on the arrow to the right, four commands appear in the pop-up menu:

- **Set timeline scale**
- **Adjust sequences**
- **Activate selected**
- **Deactivate selected**

Set Timeline Scale

When **Set timeline scale** is selected, the following dialog box appears:

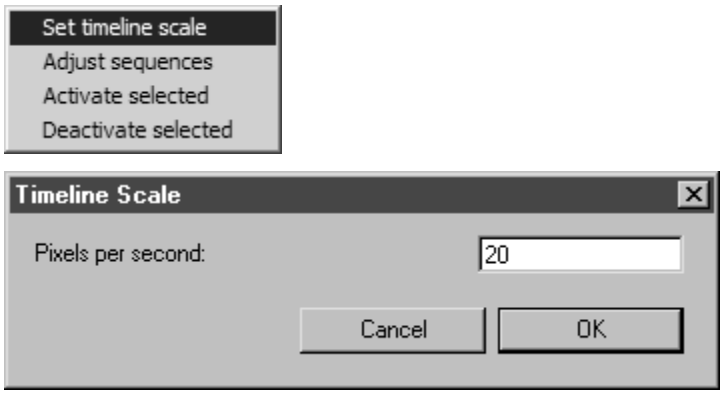

You can change the default setting here. The appearance of the timeline can be contracted or stretched out. If you increase the number of pixels, the timeline is stretched, if you enter a lower value, the timeline is contracted.

Adjust Sequences

The **Adjust sequences** menu command is only active if a placed file with animation sequences is selected while editing an animation. It is used to determine when animations in the placed file are to start.

If the menu command is not checked, a start point can be set for the entire placed file. This is useful when a complex animation that has been saved in a file is to be used in another. The start point is set via the **Timeline** dialog box.

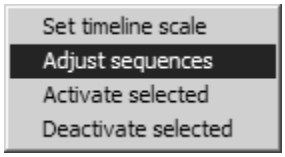

If the menu command is checked, a start point can be set for each individual sequence in the placed file. This method is most suited for objects with several sequences, for example disassembly and assembly. If a file like this has been placed, the sequences can be moved to the relevant start point so that they fit exactly into the time lapse of the target file.

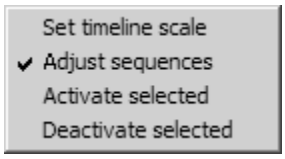

Each sequence is depicted as a bar with the name of the sequence. The length of the bar indicates the duration of the sequence. The beginning of the bar corresponds to the start time, as set in the **Edit Animation** dialog box. If repetitions have been set for a sequence, the period of time occupied by the repetitions is depicted in gray in the sequence bar.

Activate Selected Sequences

You must activate selected sequences before you can add new steps or actions to them.

Note

You have several setting options for selected sequences that are not activated. See *Sequence Setting Options on page 245*.

To activate a one or more sequences:

1. Select the sequences.
2. Click the arrow button in the **Timeline** dialog box to open the pop-up menu.
3. Click **Activate selected**. All the selected sequences are activated and the lettering in their **Timeline** sequence bars turns red.

You can now add new steps or actions to the active selected sequences.

Deactivate Selected Sequences

To deactivate a one or more active sequences:

1. Select the active sequences.
2. Click the arrow button in the **Timeline** dialog box to open the pop-up menu.
3. Click **Deactivate selected**. All the selected active sequences are deactivated. The lettering in their **Timeline** sequence bars turns black.

Current Time

The current time can be any point within an animation. The red timeline indicates the currently selected time. The time is depicted as a value in the field next to **Current time** above the timeline. You can enter a different current time here. Alternatively, you can move the timeline by clicking on it and dragging it with the mouse. The time value indicated above changes in tandem with the movement of the timeline. The timeline is moved in seconds. If you hold down the ALT key and then move the timeline, the timeline is moved pixel by pixel. The distance in terms of seconds depends on the scaling that has been set. Once you have clicked the timeline, you can release the ALT key.

If you hold down the ALT key and then click on a sequence bar, the timeline jumps to the end of this sequence.

Current Time when Creating an Animation

The selected **Current time** is particularly important when editing an animation. Just as in a movie, there can only be one scene at any one time. If a scene is inserted, the other scenes are moved. If scenes are added, there needs to be sufficient free, unoccupied time to accommodate them.

If the timeline, as in the figure, is already positioned on an active sequence bar, a new sequence is not generated when a new action is created. The action is assigned to an existing step or inserted into the sequence as a new step. The existing sequence therefore lasts longer.

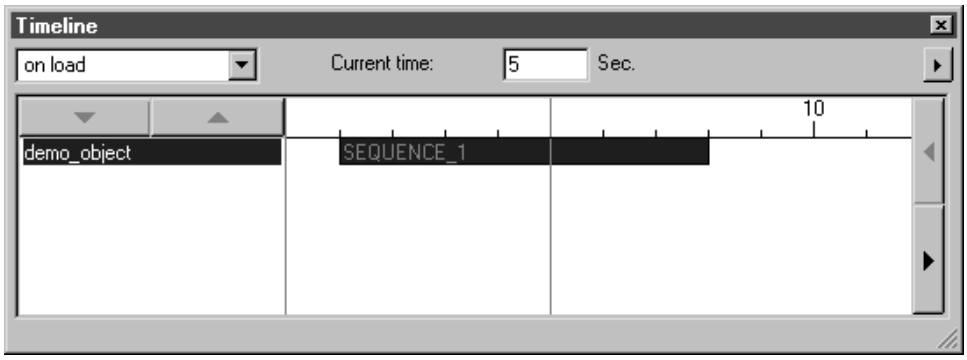

To enable a new sequence to begin, the timeline has to be at least at the end of a sequence (in the following figure at 8 seconds, or the end of `SEQUENCE_1`). Furthermore, if the timeline is at the end of a sequence, this sequence must not be active (**Active sequence** command)

The following figure depicts the new `SEQUENCE_2`. It begins at 8 seconds. The step and its action last for 3 seconds.

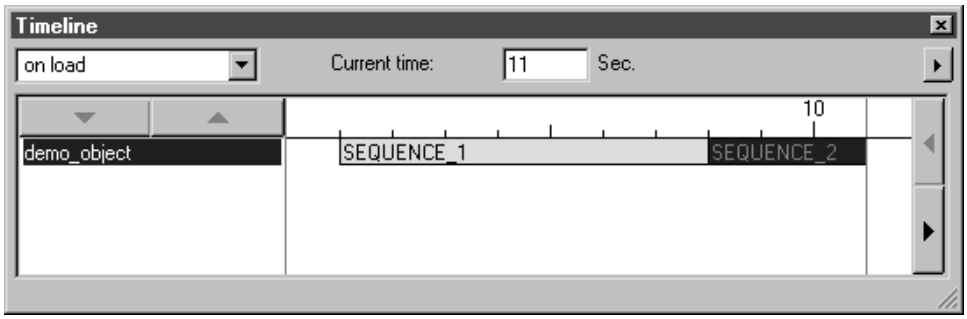

If the timeline is at the end of a sequence and the sequence is active, the next action will be added to the sequence as a new step.

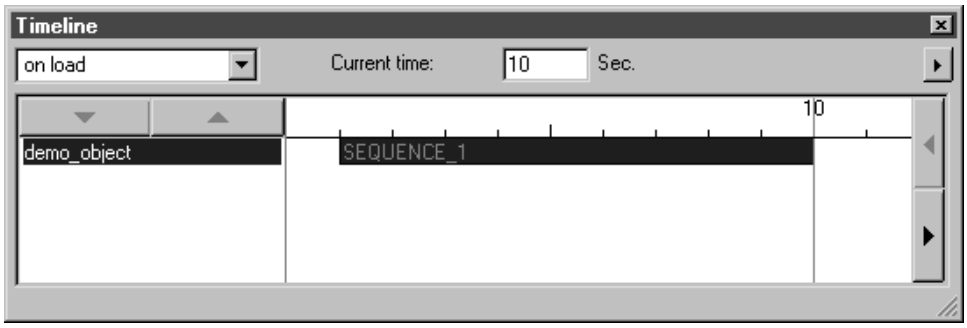

If the timeline is at the end of a step within an active sequence, a new step is inserted with the action. If the timeline is positioned within the duration of an existing step, the action is added on to this step.

These details show that it is not possible to insert an action at a specific point in an animation without taking careful note of the current time.

When animated actions are appended to a sequence, the sequence lasts longer. If sufficient time is not available, the action is not executed. The start point of the subsequent sequence will need to be moved. A sequence can be moved on the timeline. Clicking on a sequence bar and holding down the mouse button enables you to move the bar. The resulting change to the start time is automatically updated next to **start after** in the **Edit Animation** dialog box.

Clicking on a sequence bar reveals the setting options for the sequence. You can also specify a different start time here. The sequence bar in the **Timeline** dialog box is moved automatically.

To make a sequence an active sequence, hold down the CTRL key and click on the relevant sequence bar.

Commands on the Timeline Context Menu

Right-click in the **Timeline** dialog box to open the **Timeline** context menu.

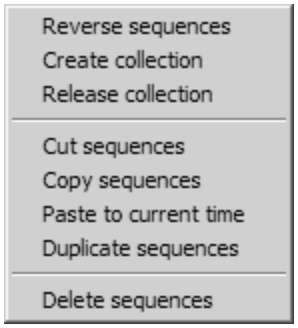

Use the commands on this menu to perform operations on all currently selected sequences. For example, you can:

- Reverse the order of steps and actions in selected sequences. (See Reversing Sequences on page 281.)
- Create sequence groups called “collections.” (See Grouping Sequences into Collections on page 281.)
- Cut, copy, paste, duplicate, or delete currently selected sequences. (See Arranging Sequences on page 283.)

Reversing Sequences

Use the **Reverse Sequences** command on the **Timeline** dialog box context menu to reverse the order of the steps and pauses in all currently selected animation sequences.

To reverse sequences:

1. In the **Edit Animation** or **Timeline** dialog box, select one or more sequences or collections. (For information about collections, see Grouping Sequences into Collections on page 281.)
2. In the **Timeline** dialog box, right-click to open the context menu and then click **Reverse Sequences**.

The steps and pauses in all selected sequences or collections are reversed. If there are several actions within a step, their order is also reversed.

Example

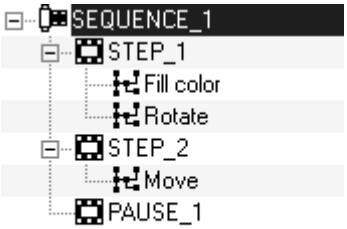

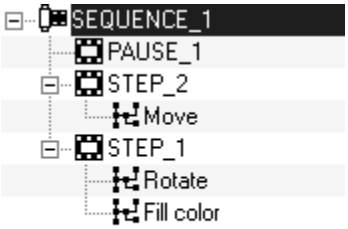

Grouping Sequences into Collections

Use the **Create collection** and **Release collection** commands on the **Timeline** dialog box context menu to group and ungroup (respectively) all currently selected animation sequences.

To create and release collections:

1. In the **Timeline** or **Edit Animation** dialog box, select two or more sequences.
2. Right-click in the **Timeline** dialog box and then click **Create collection**.
   - The collection name, for example, **Collection 1**, appears in the **Timeline** dialog box below the object list.
   - The collection duration bar appears below the sequence bars under the timeline and spans all sequences in the collection.
3. To release collections:
   a. In the **Timeline** dialog box, click a collection name to release, such as **Collection 1**, or, CTRL-click multiple collection names to release.

b. Right-click in the **Timeline** dialog box and then click **Release collection**.

All selected collections are released and their collection names are removed from the **Timeline** dialog box.

Note

Releasing a collection does not delete the sequences it contains.

Collections work like groups in drawing mode:

- Selecting a collection (by clicking its collection name in the **Timeline** dialog box) selects all the sequences it contains.
- When a collection is selected, changing a setting for one sequence it contains changes that setting for all sequences it contains.
- If you do not want setting change you make to apply to all sequences in the collection, deselect the collection first, and then select sequences directly.
- Collections are saved in Arbortext IsoDraw 7.2 (and later) ISO files. (They are not saved in older ISO, or non-ISO, file formats.)

Example

Create two collections; one with two sequences and another with three.

1. In the **Timeline** dialog box, click the **SEQUENCE_1** and **SEQUENCE_2** bars below the timeline to select these sequences.
2. Right-click in the **Timeline** dialog box to open the context menu, and then click **Create collection**.

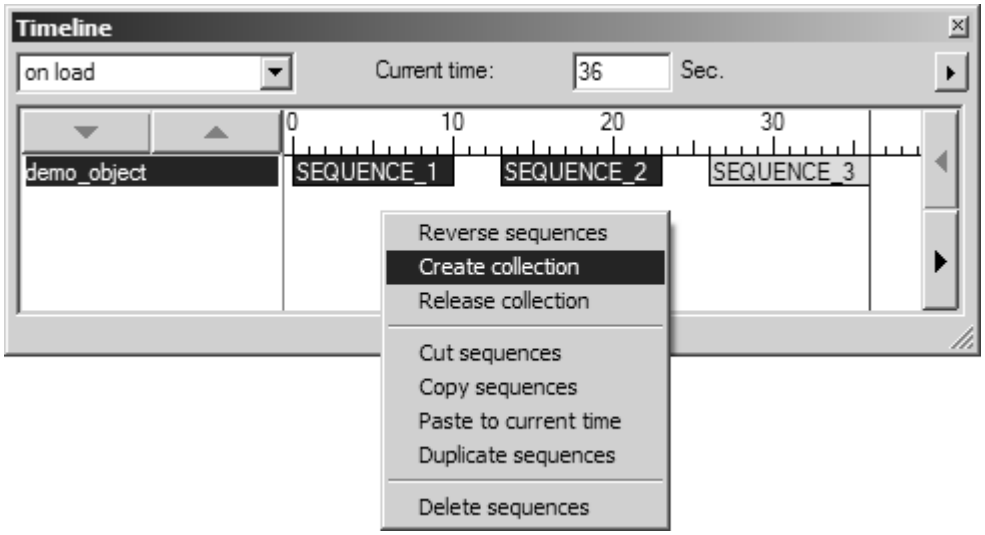

Collection 1 appears below the object list. Its duration bar below timeline spans the **SEQUENCE_1** and **SEQUENCE_2** durations.

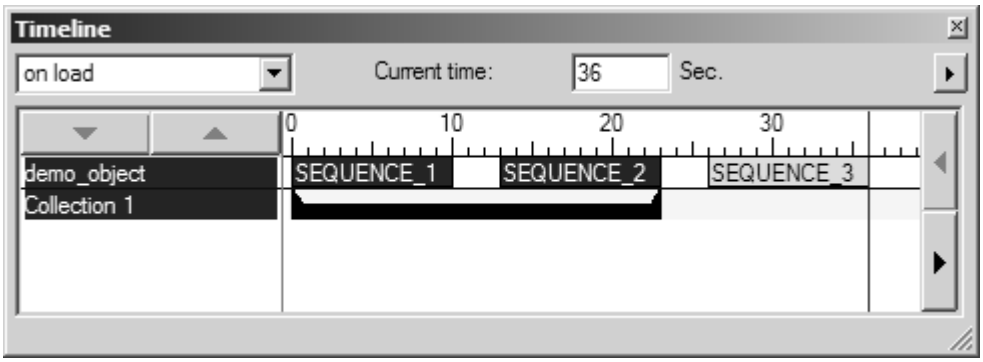

3. To create another collection containing three sequences, click the **SEQUENCE_3** bar.
4. Right-click in the **Timeline** dialog box and then click **Create collection**.

   Collection 2 appears below **Collection 1** in the object list. Its duration bar spans the **SEQUENCE_1**, **SEQUENCE_2**, and **SEQUENCE_3** durations.

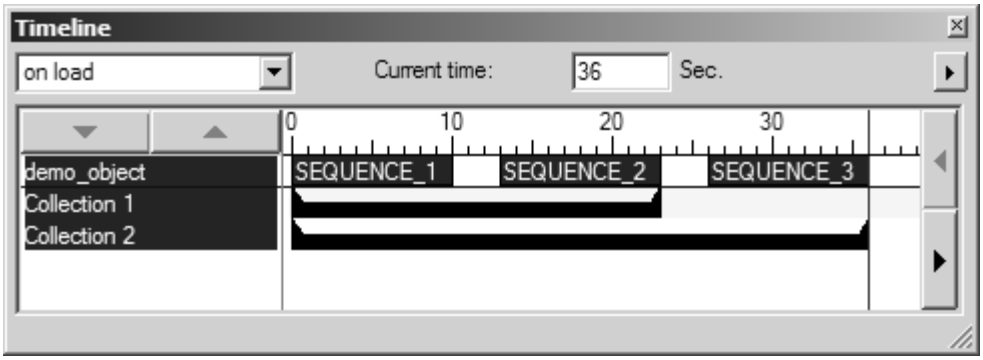

Arranging Sequences

You can use the **Cut sequences**, **Copy sequences**, **Paste to current time**, and **Duplicate sequences** commands on the **Timeline** dialog box context menu to arrange sequences in your animation. You can also use **Delete sequences** command to remove sequences from your animation.

Note

*The commands on the **Timeline** dialog box context menu only apply to animation sequences. You cannot use them to arrange steps, actions and pauses. If you need to arrange steps, actions, or pauses, use the **Cut**, **Copy**, **Paste**, and **Duplicate** commands on the **Edit Animation** dialog box menu. (These can also be used to arrange sequences. See* *Arranging Animation Items on page 252.**)*

To arrange sequences in the **Timeline** dialog box:

1. Click a sequence bar (below the timeline) to select that sequence, or, CTRL-click multiple sequence bars to select multiple sequences.
2. Right click in the **Timeline** dialog box to open the context menu, and then click:
   - **Cut sequences** to cut the selected sequences. This removes them from the timeline and from the animation tree in the **Edit Animation** dialog box.
   - **Copy sequences** to copy the selected sequences.
   - **Paste to current time** to paste cut or copied sequences at the **Current time** shown in the **Timeline** dialog box. After you click, sequence bars for the pasted sequences appear below the timeline with the suffix "Copy *n*" added to the sequence name (where *n* is the copy number). (Pasted sequences also appear in the animation tree in the **Edit Animation** dialog box after you click the object name or ID in the **Timeline** dialog box to refresh the tree view.)
   - **Duplicate sequences** to copy and paste all currently selected sequences at the **Current time** shown in the **Timeline** dialog box.

     Note

     *Pasting with either **Paste to current time** or **Duplicate sequences** works when pasted sequences do not overlap other sequences on the timeline. If you click **Paste to current time** or **Duplicate sequences** and no sequence is pasted, try moving the red timeline or changing the time in the **Current time** box.*
   - **Delete sequences** to delete all selected sequences. This removes them from the timeline and from the animation tree in the **Edit Animation** dialog box.

Example

To copy two sequences, **SEQUENCE_1** and **SEQUENCE_2**, and paste them at a later start time.

1. Select the two sequences to copy in reverse order:

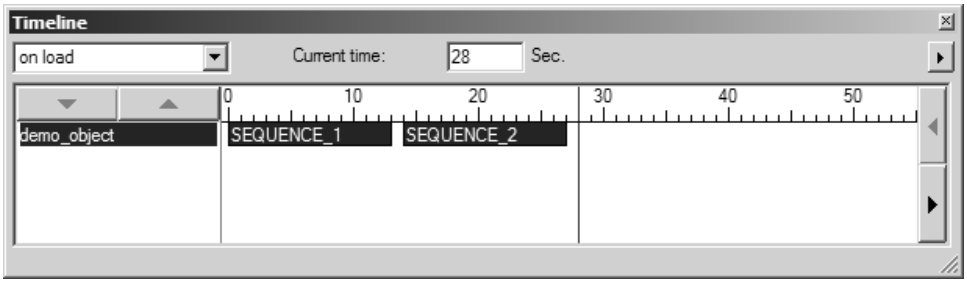

Note

Copied sequences are pasted in reverse selection order. For example, the last sequence you select will be the first sequence pasted. The first sequence you select will be the last one pasted.

   a. Click the **SEQUENCE_2** sequence bar

   b. CTRL-click the **SEQUENCE_1** bar.

2. Specify the start time for the sequences you will paste.

   In this example, enter 28 seconds in the **Current time** box or move the red timeline to 28 seconds on the timeline. This sets the current time after the end time for **SEQUENCE_2** so the pasted sequences will not overlap.

Note

*After pasting, 28 seconds will be the **Start after** setting for **SEQUENCE_1 Copy**.*

3. Right click in the **Timeline** dialog box, and then click **Paste to current time**.

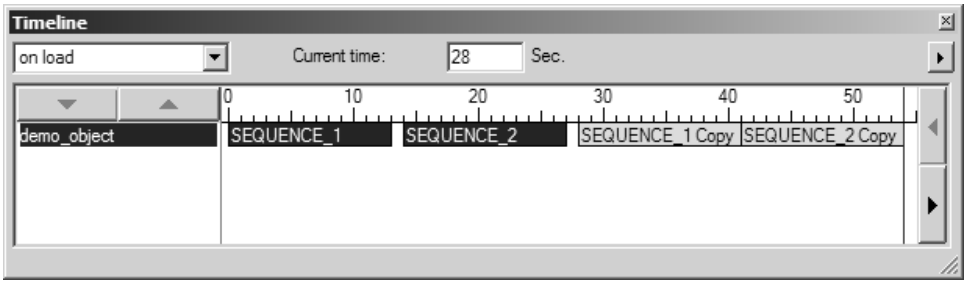

The sequence bars for sequences, **SEQUENCE_1 Copy** and **SEQUENCE_2 Copy**, appear below the timeline. **SEQUENCE_1 Copy** starts at 28 seconds. **Sequence_2 Copy** starts immediately after **Sequence_1 Copy**.

Note

When you paste multiple sequences, they are pasted with no time gaps between their end and start times. After pasting, you can drag sequence bars in the ***Timeline*** *dialog box to adjust start times manually, or, you can enter new* ***Start after*** *times for the pasted sequences in the* ***Edit Animation*** *dialog box.*

Previewing an Animation in Arbortext IsoDraw

When editing an animation, you can view your changes by closing the **Edit Animation** and **Timeline** dialog boxes, saving the file, then choosing **Objects ▸ Show in IsoView**. If you don't save the file first, any changes made to the animation since the last save will not appear in Arbortext IsoView.

If you want to preview changes to an animation without saving the file first, you can do so in Arbortext IsoDraw if the **Edit Animation** and **Timeline** dialog boxes are still open.

Note

For better animation performance when previewing animations in Arbortext IsoDraw, clear the ***Use buffered drawing*** *check box on the* ***Redraw*** *page in the* ***Preferences*** *dialog box. (This setting is cleared by default. See* *Redraw on page 121.**)*

To preview an animation in Arbortext IsoDraw without saving changes

In the **Timeline** dialog box:

1. Select a start time for your test animation run.

   You can do this in any of the following ways:

   - Enter the start time (in seconds) in the **Current time** box and then press ENTER.
   - Click and drag the red timeline to the start time. The timeline snaps to the nearest 1-second increment unless you press and hold the ALT key while

you click and drag. Using the ALT key lets you position the timeline anywhere on the scale.

Note

*If the **Current time** is **0**, you must click on the time scale before you can drag the red timeline.*

- ALT-click on any sequence bar. The red timeline jumps to the end of sequence you clicked.

2. Start the animation.

   Press and hold the CTRL key, then click on the red timeline (above the time scale line). The timeline starts advancing.

   When the timeline enters a sequence bar, that sequence plays.

   - To keep the timeline moving forward after you start it, keep holding down the CTRL key.
   - Release the CTRL key to stop the timeline.

     If you release the CTRL key when the timeline is:

     - in one sequence, the timeline stops a the end of that sequence.
     - in two or more sequences, the timeline stops at the end of the sequence that completes first.
     - not in a sequence, the timeline stops immediately (at the next time increment).

Special Features in 3D Animation

Applies to Arbortext IsoDraw CADprocess only.

General

When you import, paste or place 3D data you can create 3D animations in 3D mode.

The current display mode for the entire drawing in 3D mode is automatically adopted when the animation is played back using the **Show in IsoView** menu command. The display mode is not recorded in the animation. You can change the display mode before initiating play back.

When you have created an animation in 3D mode, it takes with it all 3D information when it is projected into a 2D illustration.

Note

Drawings for which you have created an animation in 3D mode can only be projected into a 2D illustration using the ***keep 3D data*** *option (see* *Working in 3D Mode on page 671**).*

As this type of projection allows you to switch back to 3D mode at any time, the animation can be edited further.

If you select the menu command **Show in IsoView** when the drawing is in 2D mode, the animation is displayed in the same way as in 3D mode.

You cannot create animations for a 3D drawing when in 2D mode.

Creating 2D Animations for 3D Animations

Applies to Arbortext IsoDraw CADprocess only.

You can create 2D animations for objects and groups outside the 3D drawing in the 2D window. These animations can then be viewed along with the 3D animations during playback. This applies in both 2D and 3D mode. You can only edit these 2D animations in 2D mode.

Several 3D Drawings in One File

Applies to Arbortext IsoDraw CADprocess only.

A 2D Arbortext IsoDraw file can contain imported, placed, and pasted 3D files. To re-edit the animation, switch separately for each of these files to one set in 3D mode. During this period, animations on other 3D files on the drawing sheet cannot be edited. If you play back the animation in 3D mode, all other 2D and 3D animations are displayed.

Notes on Editing Animations

A pen symbol is shown behind the name of every animated object in the object window. Clicking on this pen symbol opens the dialog boxes for editing the animation and the animation process is displayed.

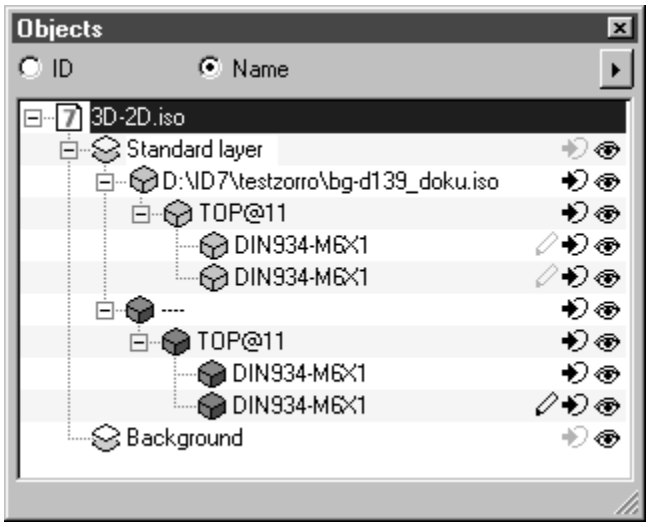

If the pen symbol is grayed out, the animation cannot be selected. The animation can therefore not be edited. This applies when:

- A 3D drawing containing animations is in 2D mode.
- 2D animations exist in a file and an imported, pasted, or placed 3D drawing (set) from this file is in 3D mode.
- Imported, pasted, or placed 3D drawings with animations are in a file in 2D mode and an imported, pasted, or placed 3D drawing is in 3D mode.

The figures below show the object window of a file with a 2D element, a placed 3D file, and a pasted 3D file. Animations have been created for all three areas of the file.

The first figure on the left shows the object window in 2D mode. Only the pen symbol for the 2D element can be selected. The second figure in the center shows the object window as it appears when the placed file is in 3D mode. Only the

animation for object `60623` can be selected. In the third figure, only the two animations for the `DETAIL` objects can be selected in the object window. The pasted file is in 3D mode.

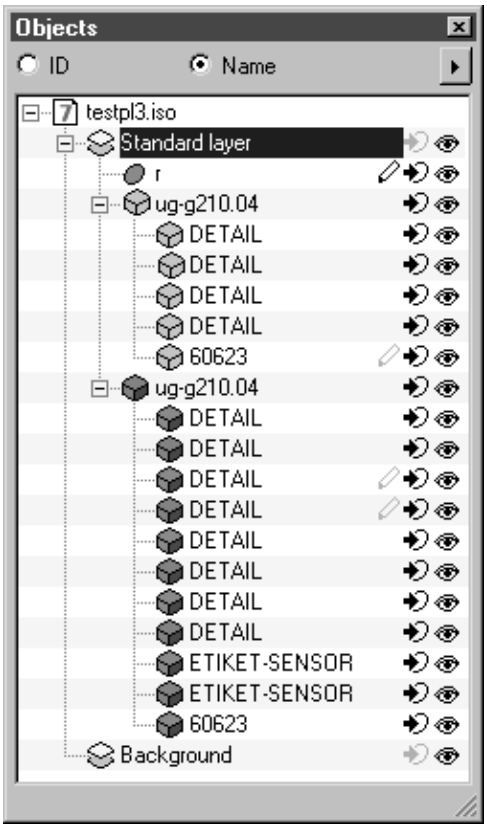

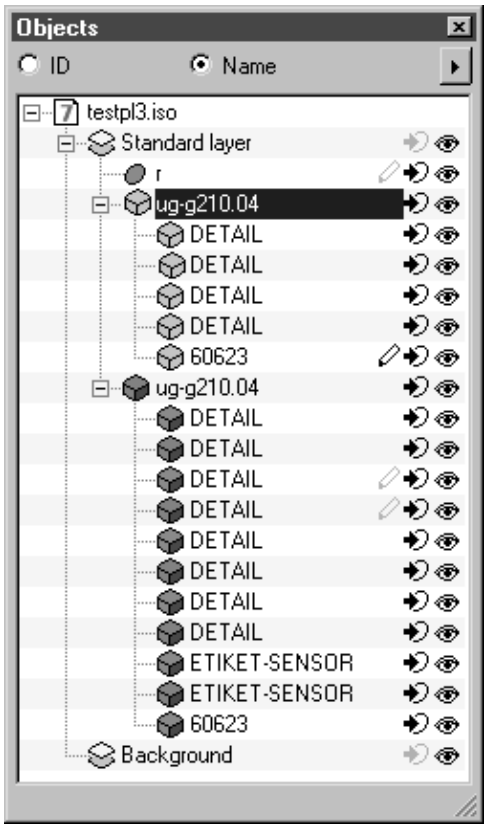

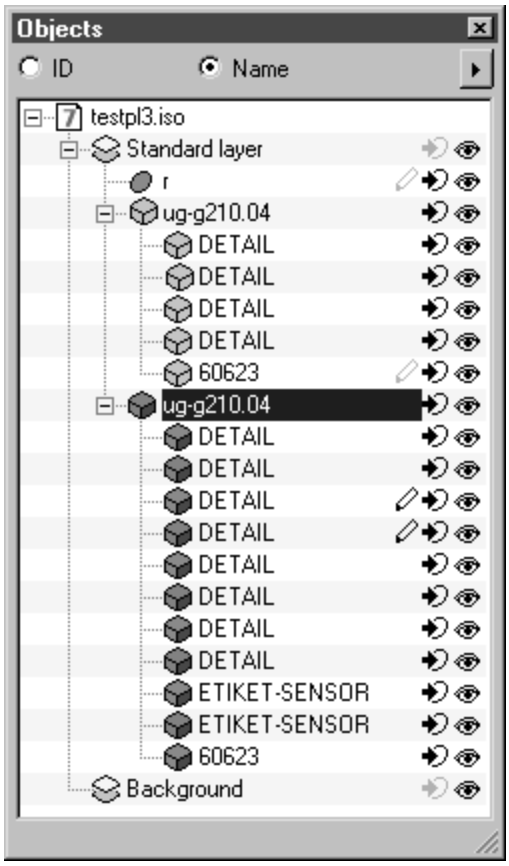

Viewports for the Animation

You can create a special viewport to be used in Arbortext IsoView when the animation is being played back. How this is achieved is described under **Viewports** in Show Attribute Window on page 352.

Remote Start Master Sequences

All sequences that are set to start **on load** in the **Timeline** dialog box appear as one "master sequence" if the ISO file containing the animation is placed in another ISO file.

A placed file can have only one master sequence. Sequences set to **remote event** or **disabled** in the Edit Animations dialog box cannot be part of a master sequence.

You can change the start time for an **on load** start master sequence by changing its **start time** in the **Edit Animations** dialog box. You can also start the master sequence in the placed file on demand by setting it to **remote event**.

Show in IsoView

Arbortext IsoView

Arbortext IsoView is part of the Arbortext IsoView intelligent viewer product range and an integral component of Arbortext IsoDraw. You can play back your animation in Arbortext IsoView.

Show in IsoView

Arbortext IsoView is launched the first time the **Show in IsoView** menu command is selected. After a short time, the content of the file that is open appears in the Arbortext IsoView window:

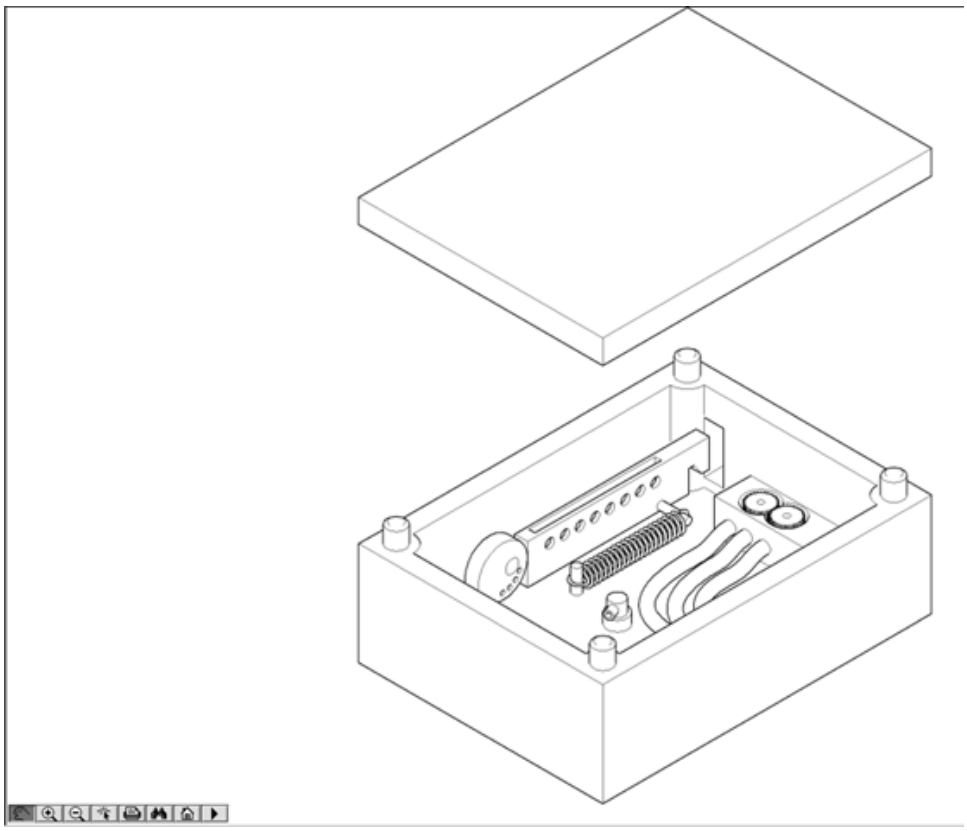

Playback of the animation begins at the set start point. The sequence with the earliest start point of all the animated objects in the drawing determines the start point for the entire animation.

Playback finishes when the final sequence is completed.

If you want to play the animation again, press CTRL+R.

Viewports for the Animation

You can create special viewports to be used in Arbortext IsoView when the animation is being played back. How this is achieved is described under **Viewports** in Show Attribute Window on page 352.

Lock 3D Interaction

Applies to Arbortext IsoDraw CADprocess only.

When working with files containing 3D data, this menu command allows you to switch off the Arbortext IsoView functions that enable the 3D object to be rotated and viewed from all sides.

This is useful when the observer is required to view the object from a specific side, for example during playback of an animation.

Activate Hot Spots

Selecting this command allows you to activate all the hotspots in the active file. If the hotspots are active, this is indicated by a tick in front of the menu command.

If the hotspots are not active, you will scarcely notice their existence. You can click on the area of a hotspot with the arrow cursor without anything happening.

If the hotspots are active, however, they will be highlighted when you click them. If links have been assigned to the object in question, these will be executed if possible. In some circumstances, this will mean that another file will be opened.

First enable the **Activate hot spots** option. Then click an object. If it has a link, the link will be executed. If the link is to a view or an object, Arbortext IsoDraw will execute the link itself. In all other cases, the Web browser will be invoked in order to execute the link.

When an object has been assigned several links, Arbortext IsoDraw is unable to decide clearly which is to be used. The following dialog box will then appear:

Select the link you want to execute. Then click **OK**. The link will then be run.

Select DTD

The first time you start Arbortext IsoDraw , **Graphical object** will be selected for the type in the object info. This has the standard attributes ID, name, hotspot, extent and object tip. Further information on these attributes can be found in Object Info on page 223. Each object type has these standard attributes. The graphical object also has an attribute of type **Hyperlink**.

This graphical object, together with its attributes, is sufficient in most cases to create objects on the illustration and assign links to these. In some cases, however, you may require additional attributes in the form of e.g. a spare parts number or a designation. For this purpose, you can create a definition file in Arbortext IsoDraw for defining the required attributes. This definition file is also known as a DTD (Document Type Definition). This is a term from the world of structured documents based on the SGML standard (Standardized General Markup Language). The following pages provide further information about DTD.

Object types and their attributes can be defined in a DTD. This allows you to save your own information in your illustrations. This can include information that you are using for a spare parts catalog or test values in a circuit diagram. You can invoke this command at any time for selecting the required DTD. The following dialog box appears:

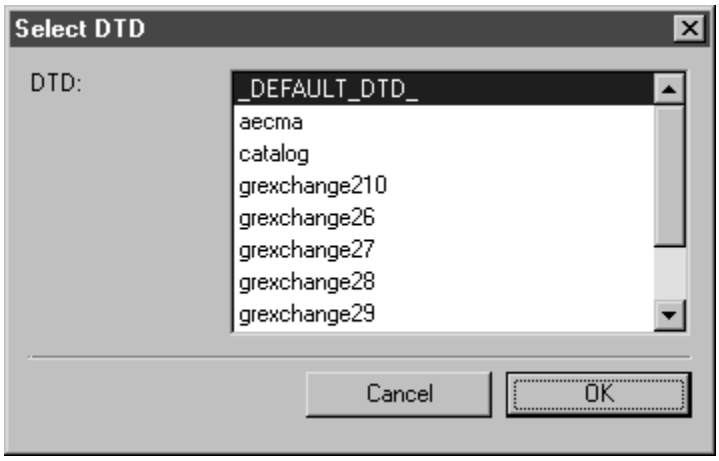

With the program, several DTDs have been installed which appear in the list:

`_DEFAULT_DTD_`	This DTD stands for the default setting described above. It is an integral part of Arbortext IsoDraw and requires no additional file.
`aecma`	This DTD contains the object definitions of the S1000D CGM profile. This profile is used in the aviation industry.
`catalog`	This DTD contains an object type `part` with attributes which can be used for a spare parts catalog. You can use it as an example of a DTD which you can design yourself.
`grexchange210`	This DTD contains the object definitions of the ATA GREXCHANGE CGM profile. This profile is used in civil aviation.
`grexchange26`	This DTD contains the object definitions of the ATA GREXCHANGE CGM profile. This profile is used in civil aviation.
`grexchange27`	This DTD contains the object definitions of the ATA GREXCHANGE CGM profile. This profile is used in civil aviation.
`grexchange28`	This DTD contains the object definitions of the ATA GREXCHANGE CGM profile. This profile is used in civil aviation.
`grexchange29`	This DTD contains the object definitions of the ATA GREXCHANGE CGM profile. This profile is used in

	civil aviation.
`s1000d22`	This DTD contains the object definitions of the S1000D CGM profile. This profile is used in the aviation industry.
`webcgm10`	This DTD contains the object definitions of the WebCGM profile. It is used if illustrations are to be saved in WebCGM format.
`webcgm20`	This DTD contains the object definitions of the WebCGM profile. It is used if illustrations are to be saved in WebCGM format.

Select a DTD and confirm by clicking **OK**. Clicking **Cancel** closes the dialog box without making any changes.

Installation

All DTDs are located in the template folder. You can find out more about organizing templates by referring to the **Preferences** command in the **Edit** menu.

Structure of a DTD

A DTD is based on strict rules defined in the SGML standard. Arbortext IsoDraw uses a subset of the possibilities that are available in SGML. The main rules are described below.

A DTD is saved as a text file with extension `.dtd`. Arbortext IsoDraw uses the file name without the extension for the name of the DTD.

The names `_DEFAULT_DTD_`, `grexchange` and `webcgm` are reserved. The existing DTDs should not be changed, otherwise CGM export may no longer agree with the relevant standards.

A DTD can also contain annotations which are ignored for interpretation purposes. An annotation begins with the characters `<!-` and ends with characters `->`. It can encompass several lines.

Example:

```
<!-- This is an annotation -->
```

The following definitions may appear in a DTD

`ELEMENT`	Corresponds to the object type
`ATTLIST`	The list of attributes
`ENTITY`	A type of macro which defines expressions used in other definitions

Definition of an Object Type

Each object type which is to appear in the object info of Arbortext IsoDraw must be defined in the DTD. What is more, a list of attributes must exist for every type. The following example defines an object type `SparePart` with standard attributes:

```
<!ELEMENT SparePart *>
<!ATTLIST SparePart
 %defAttrs;
>
```

The key elements are:

`<!ELEMENT`	Start of definition
`SparePart`	Object type
`*>`	End of definition (for SGML experts: Arbortext IsoDraw ignores any structure rules at this point)

The lines which follow define an attribute list as described in the following section.

Only the characters `a–z`, `A–Z`, `0–9`, `$+-_` (without commas) may be used for the object type.

Each DTD must contain a definition for object type `grobject` (graphical object). The minimum required definition is:

```
<!ELEMENT grobject *>
<!ATTLIST SparePart
 %defAttrs;
>
```

During import, the term `grobject` is replaced by a designation in the relevant program language.

Definition of Attributes

Each object is automatically assigned a number of standard attributes which cannot be changed. These are

`ID`	Unique definition of the object
`name`	Name of the object, need not be unique
`region`	Hotspot attributes
`viewcontext`	The area which is to be displayed if the object is to be used as the target.
`screentip`	A text which is displayed if the user moves the mouse pointer over the object.

Other attributes can also be created. Each attribute consists of three expressions: the name of the attribute, the type of the attribute and information on whether this attribute must be used or not:

```
PartNo %string; #REQUIRED
```

This line defines an attribute named `PartNo` of type `string`. The expression `#REQUIRED` indicates that this attribute must be completed by the user. He can do this by means of the **Validate objects** function. The following data types have been predefined for attributes:

`%string;`	A character string
`%float;`	A floating point number
`%integer;`	An integer
`ID`	Unique ID, reserved for attribute ID
`uri`	A hyperlink
`%special;`	Reserved types for specific standard attributes
`%defAttrs;`	Reserved type for all standard attributes

An expression beginning with `%` and ending with `;` is known as an entity (`ENTITY`). Entities are defined in the DTD. Arbortext IsoDraw recognizes the entities `integer`, `float`, `string`, and `special`, and applies rules in the object info which correspond to these types. The user is therefore unable to enter letters if the attribute has been declared as an integer. Further information on entities can be found in the enclosed DTDs or in the SGML literature.

An attribute list can be created with the specified data types. The minimum form of such a list is as follows:

```
<!ATTLIST SparePart
%defAttrs;
>
```

The elements are as follows

`<!ATTLIST`	Start of attribute list
`SparePart`	Name of associated object type
`%defAttrs;`	This object has the standard attributes
`>`	End of attribute list

An attribute list with additional attributes could take the following form:

```
<!ATTLIST SparePart
 %defAttrs;
 PartNo %string; #REQUIRED
 <!-- An attribute “PartNo” of type string-->
 Quantity  %integer; #IMPLIED
 <!-- An attribute “Quantity” of type quantity-->
 Assembly uri #IMPLIED
 <!-- An attribute “Assembly” of type hyperlink-->
```

```
>
```

The expression `#IMPLIED` appears if the attribute is not obligatory.

Defining your Own DTD

It is generally advisable to save non-graphical information outside the illustration, e.g. in a database or a separate XML file for use on the Internet. It may be useful, however, to generate a file containing all attributes which is then not dependent on other files.

It will be adequate in most cases to attach additional attributes to the standard object type Graphical object. The following example shows how you can derive your own DTD from one of the existing DTDs.

First, look for the folder containing your DTDs (see Preferences on page 108). Then copy file `grexchange.dtd`. Give the copied file the name `sample.dtd`. Then open this file with a word processing program. The first lines will look as follows:

```
<!— ATA GREXCHANGE 2.6 Model —>

<!-**********************************************
   This is the GREXCHANGE DTD. Do not modify or rename
   this file! If you want to use this DTD as a
   starting point for your own DTD make a copy and
   give the copy a different name.
   The new name must not contain the words GREXCHANGE
   or WebCGM.
   ************************************************
   **

—>
```

Change the term `ATA GREXCHANGE` in the first line to `Sample` so that this DTD is not accidentally confused with the GREXCHANGE DTD. Then scroll to the end of the file where you will find the following definition:

```
<!ELEMENT grobject (grobject)*>
<!ATTLIST spare part
 %defAttrs;
 refloc   %String;  #IMPLIED
>
```

Delete the following line:

```
 refloc   %String;  #IMPLIED
```

It may be the case that other attributes are also listed if the GREXCHANGE standard was modified. You can also delete these attributes. You now have a DTD which only contains the minimum definition for the Graphical object. Add your own attributes as required:

```
<!ATTLIST spare part
 %defAttrs;
 PartNo  %string; #IMPLIED
 Quantity  %integer; #IMPLIED
 Assembly uri #IMPLIED
>
```

You have now defined three additional attributes. Save the file as a pure text file. Now start Arbortext IsoDraw and select the **Select DTD** command. If you have done everything correctly, the sample DTD will appear in the list. Select this DTD and confirm with **OK**. The new attributes will appear if you now call up the object info for an element.

Validate Objects

This menu command allows you to check all object information in your illustration. There are various reasons why such a check can be useful. The most important of these is that you can verify whether all the required information has been entered. It also discovers inconsistencies which could otherwise result in problems in interactive applications.

If you select the menu command, the following dialog box appears:

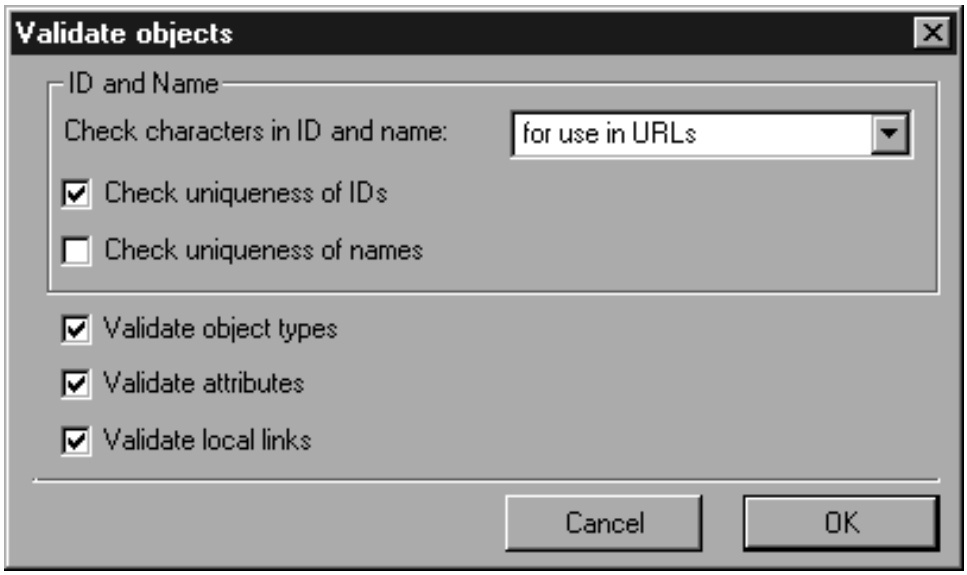

This allows you to define the test conditions in detail.

ID and Name

These attributes are particularly important, since they are used to identify the object. Different rules apply for these attributes in different environments. The ID should, as a general rule, always be unique so that you can identify the object

unambiguously. If the illustrations are used in a Web environment (HTML or XML), ID and Name are often transferred as part of an Internet address (URI). In this case, only specific characters may be used. WebCGM is even more exact in prescribing which characters may be used in an ID or Name. For this reason, you can specify here which rules are to be used when examining the ID and Name.

You can check the uniqueness of ID and Name individually. Do this by enabling the relevant boxes. As a general rule, only the ID should be unique.

Validate Object Types

This setting checks whether object types which do not agree with the set DTD have been used in the illustration.

Validate Attributes

Several checks are performed at this point. The first checks whether the attribute is allowed with the selected DTD. The value is then checked. If the entry contains mistakes, it will need to be corrected. A check is also performed to find out whether the value needs to be entered in accordance with the DTD. If so, a missing value will be reported.

Validate Local Links

If this box is enabled, link attributes will be examined to determine whether their target still exists.

Depending on the object info and the DTD selected, dialog boxes will now be displayed to report any errors which have been found. You then have the opportunity to correct these errors.

This command enables you to delete attributes from object info which does not match the definition file (DTD) currently selected. Further information on these definition files can be found in Select DTD on page 294.

If you open files containing attributes, these attributes will be adopted by Arbortext IsoDraw . This can be the case with Arbortext IsoDraw, CGM or Adobe Illustrator files. Since these attributes may have been created without DTD or using a different DTD, they will not necessarily match the DTD currently set. This situation can also occur if you change the DTD using command **Select DTD**.

Delete Uncompliant Attributes

This function examines all object info. If the object info for an element contains an attribute which has not been defined in the current DTD, it will be deleted.

First use **Select DTD** to select the DTD you want to use. Then select the elements you want to process. Select the **Delete uncompliant attributes** command. The following dialog box appears:

This indicates how much object info has been changed by this function.

Window Size

You can use this command to set the window size in Arbortext IsoDraw in order to create viewports. You can set the window size in this way so that is agrees with the dimensions of Arbortext IsoView in your interactive application. By way of example, the size of Arbortext IsoView on an HTML page can be specified in pixels. If the width is 400 and the height 300 pixels, you can ensure identical ratios when creating the viewports.

First ensure that the window on Windows computers has not been maximized. Then select the menu command. The following dialog box appears:

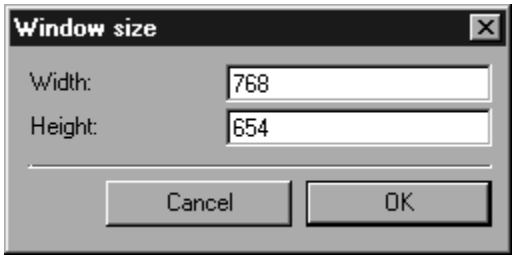

The current size of the window is displayed. Now change the values as you wish. **Cancel** terminates the dialog box without performing any changes, clicking **OK** confirms your entry. The window is then changed to the desired size. You can now create the required viewports using the **New viewport** command.

5

Text Menu

Most commands in the **Text** menu can be selected by keyboard commands. If there is a key combination command code, it is indicated next to the command text.

The figure shows which commands in the **Text** menu can be selected using a command code.

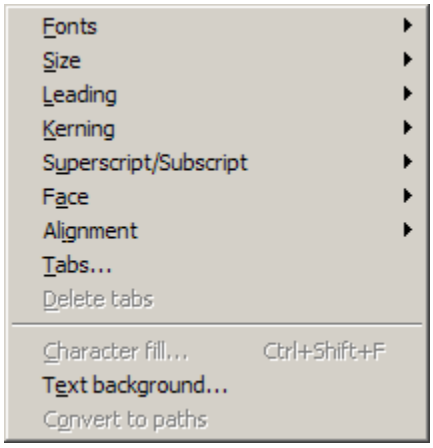

Fonts

You can use the **Fonts** command to assign a font to either an entire text element or to a part of a text element. If you write a new piece of text, the last font selected will be used.

Changing the Entire Text Element

Select the element and then select the required font from the submenu. The text for the element is then displayed in the new font. A tick now appears in front of the selected font.

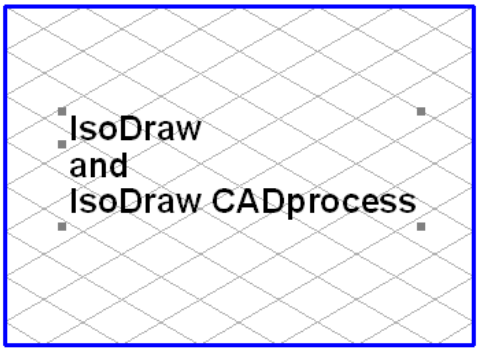

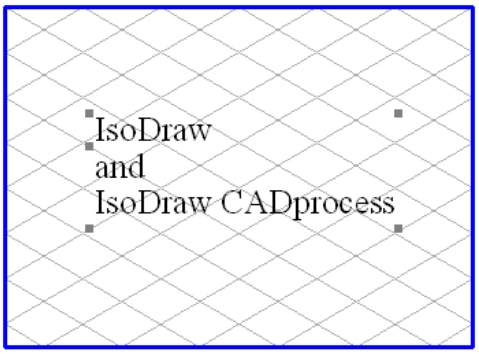

If you wish to select a font which does not yet appear in the submenu, use **Select font**. The **Select font** dialog box appears. When clicking on **OK** the selected font will be applied to the selected text element and will also appear in the submenu. If you click **Cancel**, your selection will be ignored.

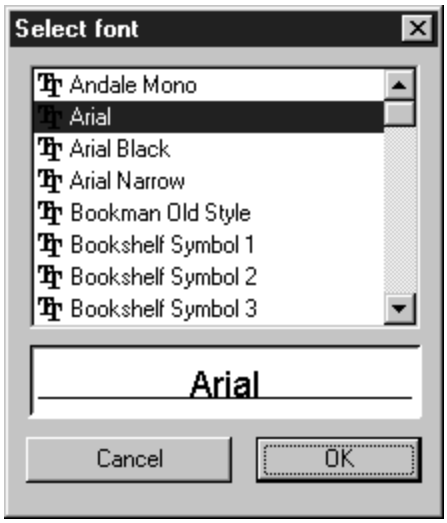

Changing a Part of a Text

Select the **Text** tool from the toolbox and click the text element. The flashing insertion cursor appears. You can now select the relevant section of text (see Text on page 659). Then choose the required font from the menu. The selected part of the text will be displayed in the new font. You can select a new font just as you can for a complete text element using the command **Select font**. If you have used several fonts in a text element, the font of the character which follows the insertion cursor appears with a tick in the submenu. If you have selected characters with different fonts, no tick appears. Select the arrow cursor to conclude the editing of the text element.

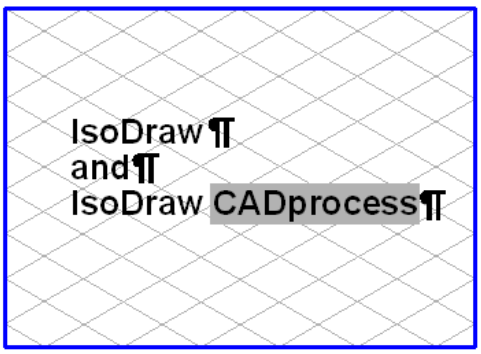

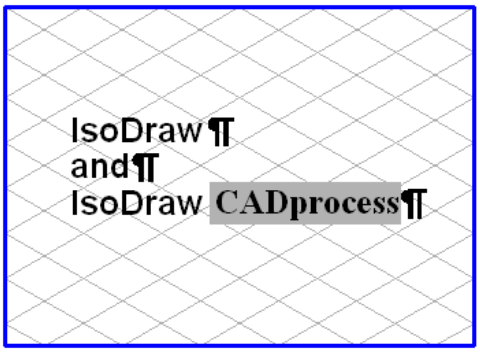

The **Fonts** submenu lists only PostScript™ or TrueType™ fonts. Bitmap fonts cannot be used.

Note

If documents are exchanged between different computers it may be the case that fonts used in a document cannot be found. In this case, stop working with Arbortext IsoDraw , install the required fonts and restart.

Size

You can use menu command **Size** to change the size of the individual letters and characters. The actual size depends on the font used. The size is specified in points, one point corresponding to approximately 0.351 mm. If you write a new piece of text, the last font selected will be used.

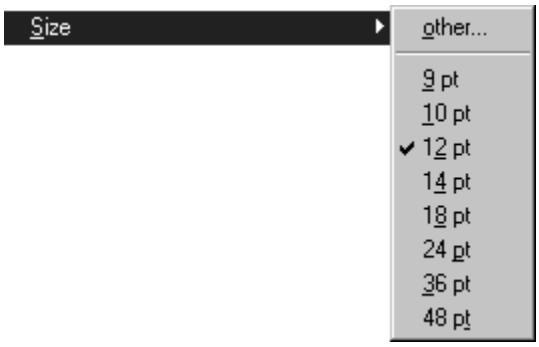

Changing the Entire Text Element

Select the element and then select the required size from the submenu. The text for the element is then displayed in the new size. A tick now appears in front of the selected font size.

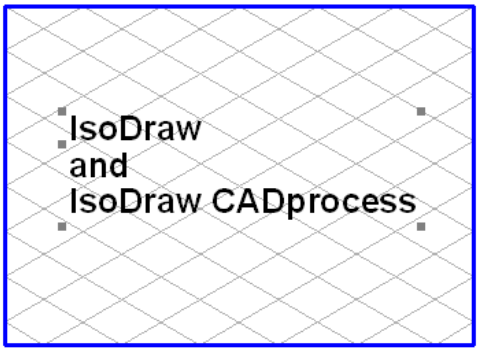

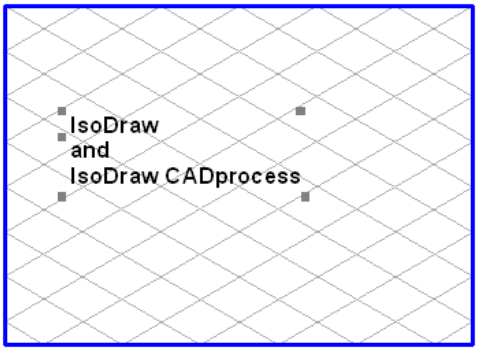

If you wish to select a font size which cannot be selected from the submenu, choose **Size ▸ other**. The following dialog box appears:

Here, you can enter a value for the size with up to three digits after the decimal point. Clicking **OK** applies the entered value to the selected text element. The selected font size appears the next time the dialog box is opened if the text element is selected. If you click **Cancel**, your entry will be ignored.

Changing a Part of a Text

Select the **Text** tool from the toolbox and click the text element. The flashing insertion cursor appears. You can now select the relevant section of text (see Text on page 659). Then choose the required size from the menu. The selected part of the text will be displayed in the new size. You can enter your own size just as you can for a complete text element using the command **Size ▸ other**. If you have used different font sizes in a text element, the font size of the character following the insertion cursor appears with a tick in the submenu. If you have selected characters with different font sizes, no tick appears. Select the arrow cursor to conclude the editing of the text element.

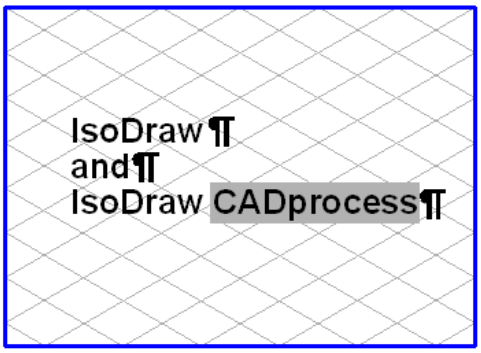

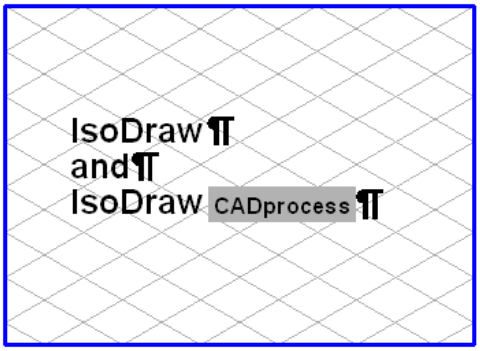

Leading

You can use the menu command **Leading** to change the leading between the individual paragraphs of a text element. The leading is measured between two baselines. The distance is specified in points, one point corresponding to approximately 0.351 mm. If you write a new piece of text, the last leading selected will be used.

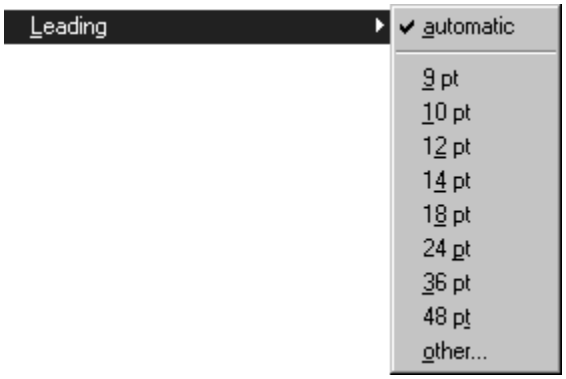

Changing the Entire Text Element

Select the element and then choose the required leading from the submenu. The text for the element is then displayed in the new leading. A tick now appears in front of the selected leading.

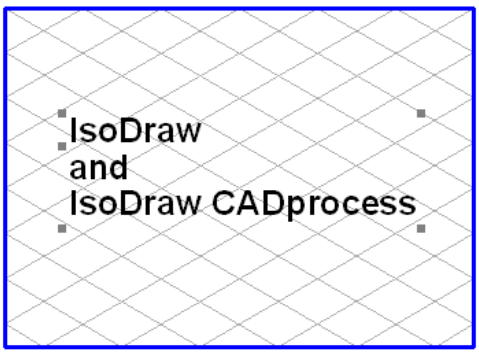

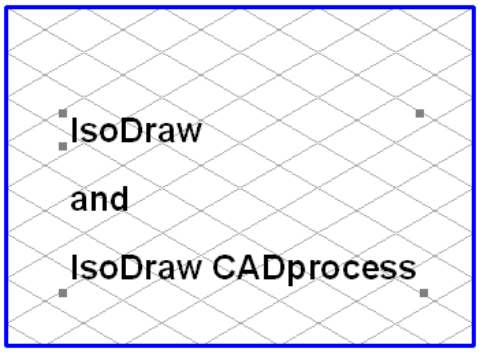

If you wish to select a leading which cannot be selected from the submenu, use the command **Leading ▸ other**. The following dialog box appears:

Here, you can enter a value for the leading with up to three digits after the decimal point. Clicking **OK** applies the entered value to the selected text element. The selected leading appears the next time the dialog box is opened if the text element is selected. If you click **Cancel**, your entry will be ignored.

Changing a Part of a Text

Select the **Text** tool from the toolbox and click the text element. The flashing insertion cursor appears. You can now select the relevant section of text (see Text on page 659). Click with the insertion cursor on one of the lines of the paragraph to which you wish to assign a different leading. Now select the required leading from the menu. The text will now appear with the new leading. You can enter your own leading just as you can for a complete text element using the command **Leading ▸ other**. If you have used different leadings in a text element, the leading of the line where the insertion cursor is positioned appears with a tick in the submenu. If you have selected lines with different leadings, no tick appears. Select the arrow cursor to conclude the editing of the text element.

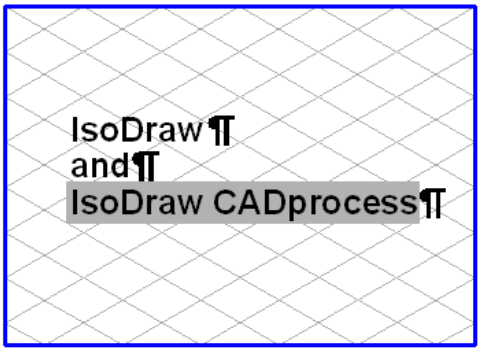

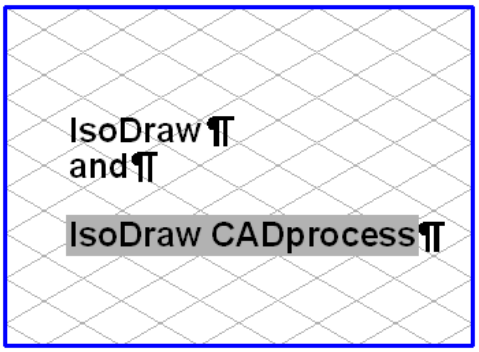

Kerning

You can use the menu command **Kerning** to modify the spacing between two or more characters. The kerning 0 represents equidistant spacing between the characters appropriate for the font and the font size. Positive values enlarge the kerning, while negative values lower it. The values are measured in units of 1/1000 of a quad (em). The width of a quad is relative to the current font size. A quad is 10 point for a font size of 10 point. As the units are measured in 1/1000, 100 units

of a 10 point font size correspond to one point. One point corresponds to approximately 0.351 mm. If you write a new text, the last kerning selected will be used.

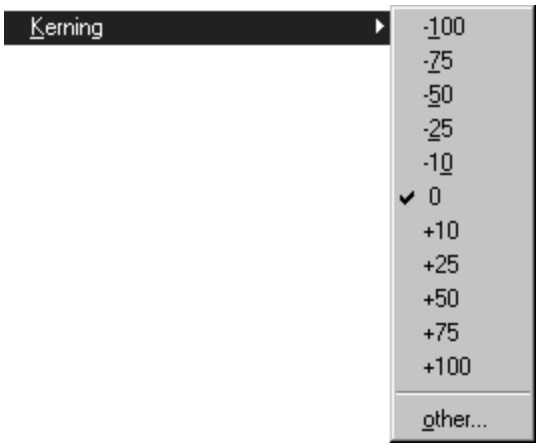

Changing the Entire Text Element

Select the element and then choose the required value from the submenu. The text of the element is then displayed in the new kerning. A tick now appears in front of the selected kerning.

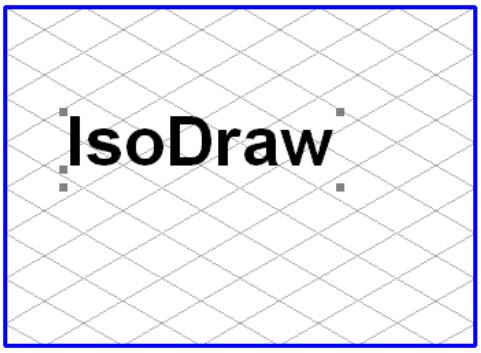

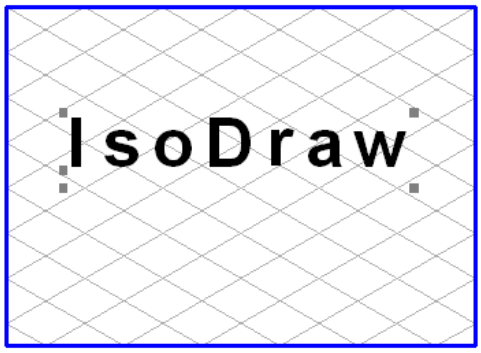

If you wish to select a kerning which does not appear in the submenu, use the command **Kerning ▸ other**. The following dialog box appears:

Here, you can enter a value for the kerning. You can enter whole-figure numbers between -300 and +300. Clicking **OK** applies the entered value to the selected text element. The selected kerning is displayed in the unit (1/1000) the next time the dialog box is opened if the text element is selected. If you click **Cancel**, your entry will be ignored.

Changing a Part of a Text

Select the **Text** tool from the toolbox and click the text element. The flashing insertion cursor appears. You can now select the relevant section of text (see Text on page 659). Select the characters to which you wish to assign another kerning value. Now select the required leading from the menu. The text will now appear with the new leading. You can enter your own kerning just as you can for a complete text element using the command **Kerning ▸ other**. If you have used different kernings in a text element, the kerning of the character following the insertion cursor appears with a tick in the submenu. If you have selected characters with different kernings, no tick appears. Select the arrow cursor to conclude the editing of the text element.

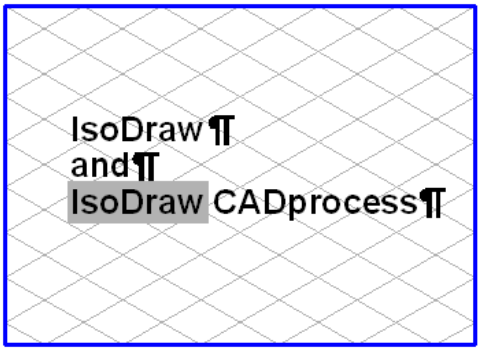

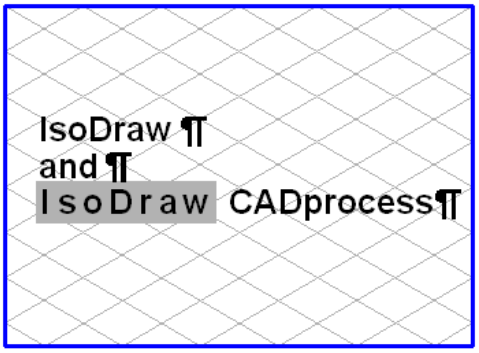

Superscript/Subscript

Use menu command **Superscript / Subscript** to alter the spacing of characters in a text element with reference to the baseline. The values for superscript/subscript define the distance from the baseline. Positive values move the character vertically upwards, while negative values move it vertically downwards. The value is specified in points, one point corresponding to approximately 0.351 mm. If you write a new piece of text, the last superscript / subscript setting selected is used.

If you select a text element with the arrow cursor, the command cannot be selected.

Changing a Part of a Text

Select the **Text** tool from the toolbox and click the text element. The flashing insertion cursor appears. You can now select the relevant section of text (see Text on page 659). Select the characters which are to be superscripted or subscripted. Then select the required spacing from the submenu. The selected text section is then displayed in the new spacing from the baseline. A tick now appears in front of the selected spacing.

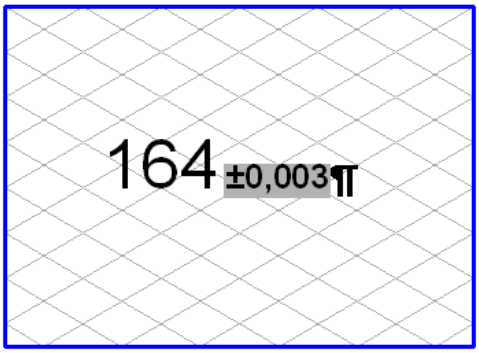

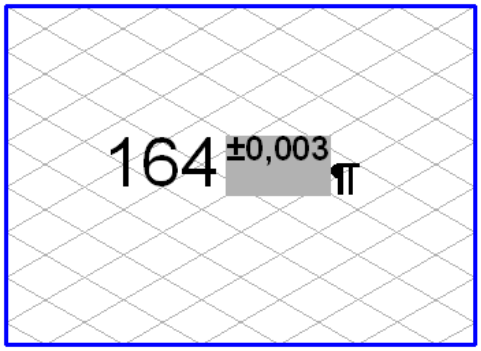

If you wish to apply a spacing which does not appear in the submenu, use the **Superscript/Subscript ▸ other** command. The following dialog box appears:

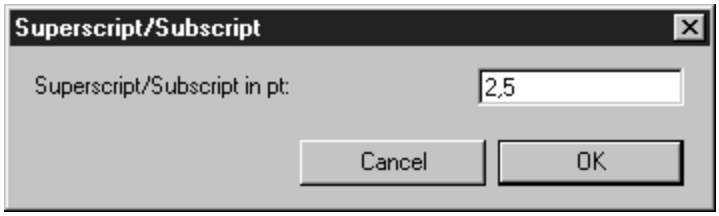

Here, you can enter a value for the kerning. You can enter values with up to three digits after the decimal point. Clicking **OK** applies the entered value to the selected text section. The selected spacing for the superscript or subscript appears the next time the dialog box is opened if this text section is selected. If you click **Cancel**, your entry will be ignored.

Face

You can use the menu command **Face** to change the appearance of the individual letters and characters. There are four variants of **Face** to choose from: **Normal**, **Bold**, **Italic**, and **Bold Italic**.

Changing the Entire Text Element:

Select the element and then choose the required face from the submenu. The text for the element is then displayed in the new face. A tick now appears in front of the selected face.

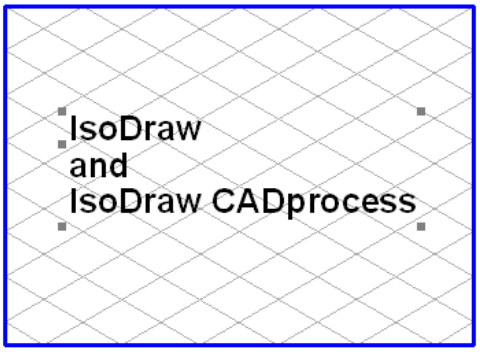

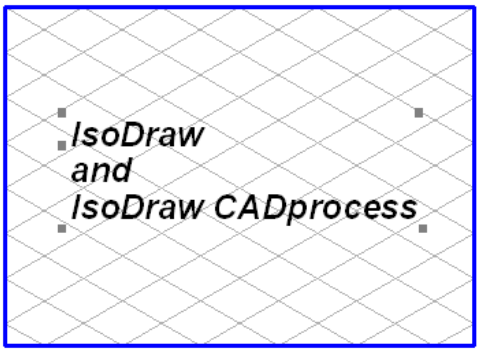

Changing a Part of a Text

Select the **Text** tool from the toolbox and click the text element. The flashing insertion cursor appears. You can now select the relevant section of text (see Text on page 659). Then choose the required face from the menu. The selected part of the text will be displayed in the new face. If you have used different faces in a text

element, the face of the character following the insertion cursor appears with a tick in the submenu. If you have selected characters with differing faces, no tick appears. Select the arrow cursor to conclude the editing of the text element.

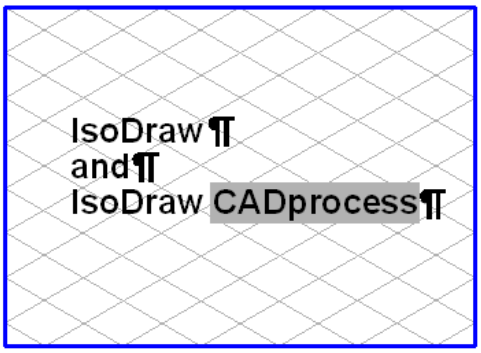

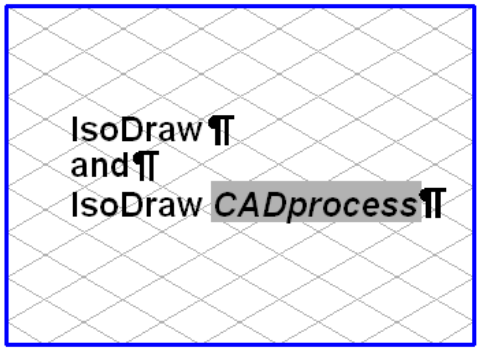

Alignment

You can use the menu command **Alignment** to change the alignment of text elements. An element can be aligned both horizontally and vertically. Text sections in text elements can be aligned horizontally.

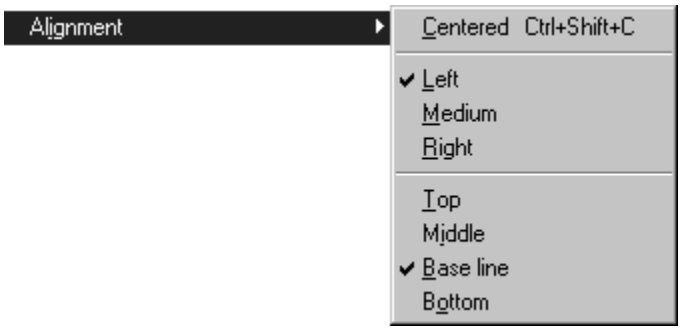

Aligning an Entire Text Element

Select the element using the arrow cursor and then select the required alignment from the menu. The text of the element will then be displayed with the new alignment.

Horizontal Alignment

You can align text horizontally using **Left** for left-flush, **Right** for right-flush and **Center** for centered.

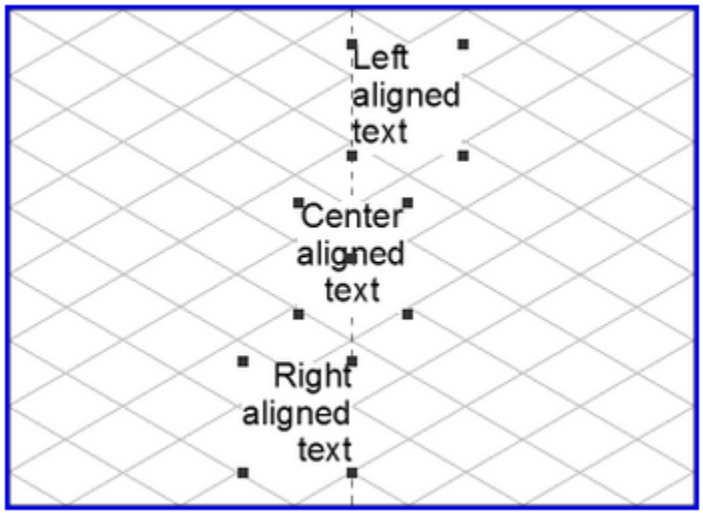

Vertical Alignment

You have four options for aligning text vertically. Each of these four options moves the entire text element:

Up	Aligns text so that the ascenders of the first line end at the height of the insertion point.
Center	Moves the center of the text to the insertion point.
Baseline	Moves the baseline of the first line to the insertion point.
Down	Aligns text so that the descenders of the last line end at the height of the

	insertion point.

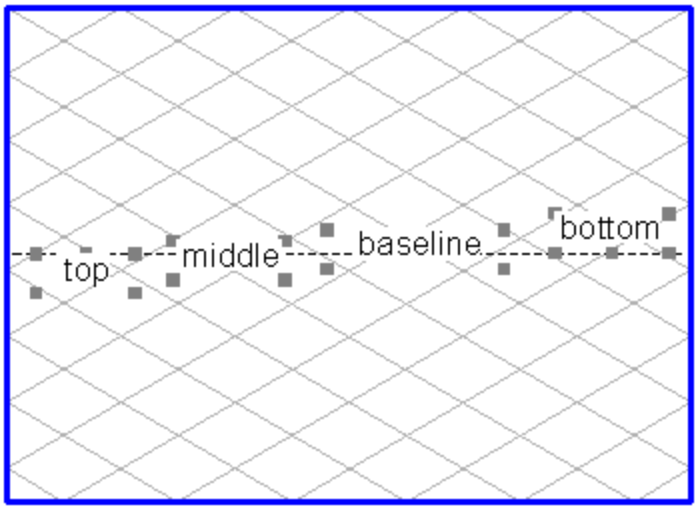

Aligning a Part of a Text

You can also change the horizontal alignment if you are in the process of editing the text element. The alignment takes place by paragraph, i.e. up to at least the next paragraph marker. Select the **Text** tool from the toolbox and click the text element. The flashing insertion cursor appears. You can now select the relevant section of text (see Text on page 659). Select the required alignment. The selected text is then displayed with the new horizontal alignment.

Tabs

Use the menu command **Tabs** to format text elements with tabs while you are editing the text. The selected tabs are effective for the selected text, or at least for a paragraph between two paragraph markers. If you select a text element with the arrow cursor, you can only set tabs for the entire text element.

Defining Tabs for an Entire Text Element

Select the element using the arrow cursor and then select the command **Delete tabs**. The following dialog box appears:

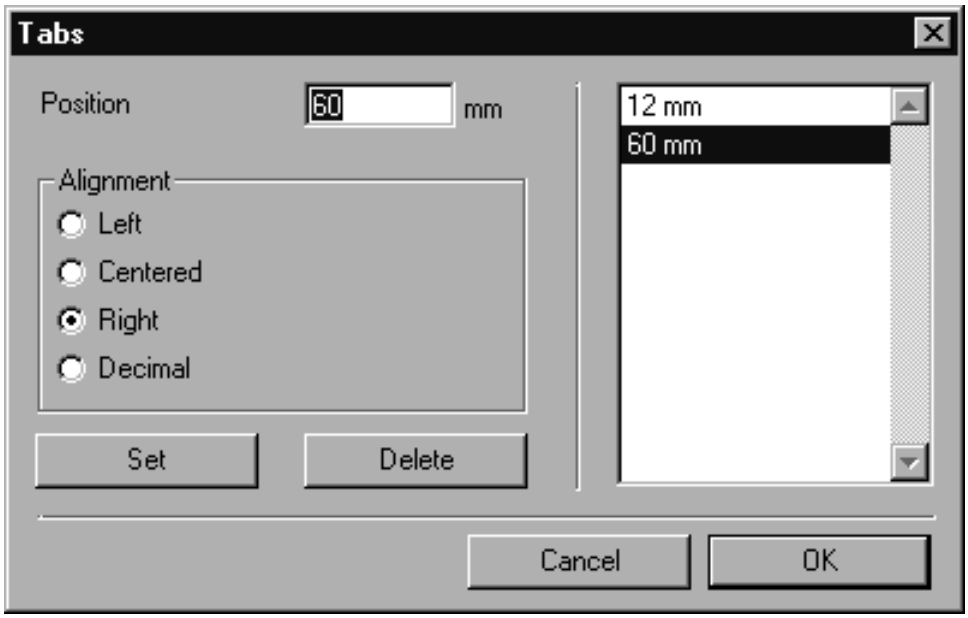

In the **Position** entry field, you can determine at which location in the text the tab stop should be positioned. The value is measured from the left-hand edge of the text element.

In the **Alignment** field, you can select the type of tab. Selecting **Left** gives a left-flush tab. It aligns the selected text left-flush with the tab stop. **Centered** centers the text around the tab stop. **Right** positions the text right-flush in front of the tab stop. If you wish to align numbers with digits after the decimal point, select **Decimal**. The decimal tab then aligns the digits to the decimal point.

If you click on **Set**, the value for the position appears in the display field. Your selection is confirmed. **Delete** deletes the last selected tab.

Clicking on **Cancel** exits the dialog box. Your entries or modifications are ignored. Following confirmation with **OK**, the set tabs are applied to the selected text element.

If you have selected the **Text** tool from the toolbox and have clicked on the text element, a symbol bar appears with tab symbols above the text element. You will see red symbols for the type of tab in the specified position.

Defining Tabs for a Part of a Text

Select the **Text** tool from the toolbox. Click on the text element. The flashing insertion cursor appears. You can now select the relevant section of text (see Text on page 659). If you now select the command **Tabs**, the dialog box appears as described earlier. The specified tabs are then applied to the selected text section. If you do not select any text, the specified tabs are applied to the paragraph containing the insertion cursor. Following confirmation with **OK** in the dialog box, the symbol bar appears containing the specified tab symbols above the text element. If you have set different tabs for different paragraphs, the tab symbols which have been set for the current paragraph are always displayed. If you move around in the text with the insertion cursor, the display in the symbol bar will change accordingly.

To subsequently determine the position of a tab, click on the text element with the **Text** tool. The flashing insertion cursor appears. Select the command **Tabs**. All the tabs are displayed in the **Tabs** dialog box. If the text element contains paragraphs with differing tabs, the display reflects the position of the insertion cursor. If you select the entire text, the command **Tabs** cannot be selected.

Note

If you wish to use fixed formatting with tabs and other text attributes for several text elements, it is expedient to set up a text format. Here, you can define all the attributes for a text just once. The text format can then be used for each text element. Text formats can be created in the ***Attributes*** *window.*

Delete Tabs

Use the command **Delete tabs** to delete tabs.

Deleting Tabs for an Entire Text Element

Select the element using the arrow cursor and then select the command **Delete tabs**. All the tabs in the entire text element are deleted.

Deleting Tabs for a Part of a Text

Select the **Text** tool from the toolbox. Click on the text element. The flashing insertion cursor appears. You can now select the relevant section of text (see Text on page 659). Select command **Delete tabs**. All the tabs in the selected text section are deleted. If you have set different tabs for different paragraphs, only the tabs for the selected text section are ever deleted. If you do not select any text, the tabs for the paragraph where the insertion cursor is positioned are deleted.

Character Fill

This menu command allows you to change the graphic attributes of a text element.

It also allows you to change the appearance of the letters and characters.

Use the arrow cursor to select the desired text elements and choose menu command **Character fill**. You can also choose this command if you are in the process of editing a text element. The following dialog box appears:

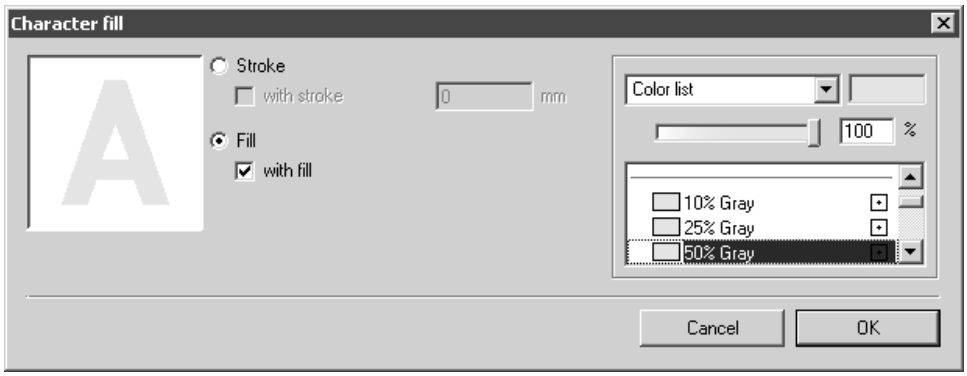

Normal text consists of characters which are filled in black. This status is shown when the dialog box is being opened. The color selection area also allows you to give texts a color fill. You can select a color from the color list or set your own color. The text in the illustration has a gray value of 50%.

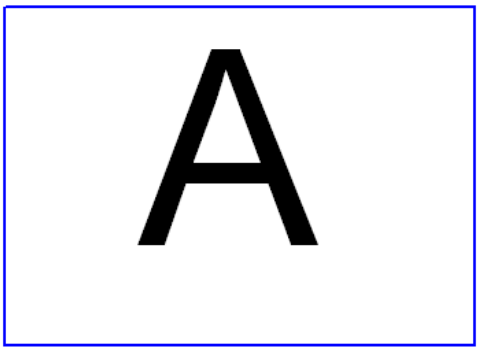

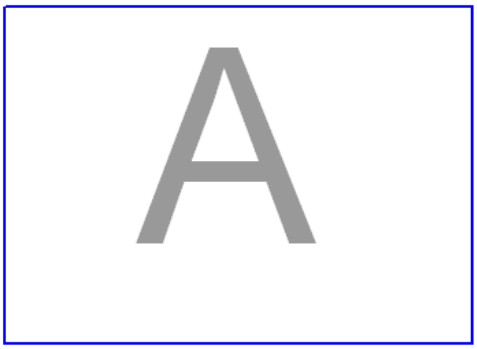

Note

Texts are shown on the screen in the selected color.

You wish to apply a new color to other text elements. It is expedient to define the new color once in the ***Fills*** *window. This color then also appears in the color list for* ***Character fill****. You can then select the color immediately. See* *Show Fill Window on page 408* *for details.*

The fill is removed if you click on the tick in the **With fill** box. The tick disappears.

You can also change the text so that only an outline is printed out. Click the **Stroke** button. An input field appears for entering the thickness. The color selection area allows you to specify the color of the contour.

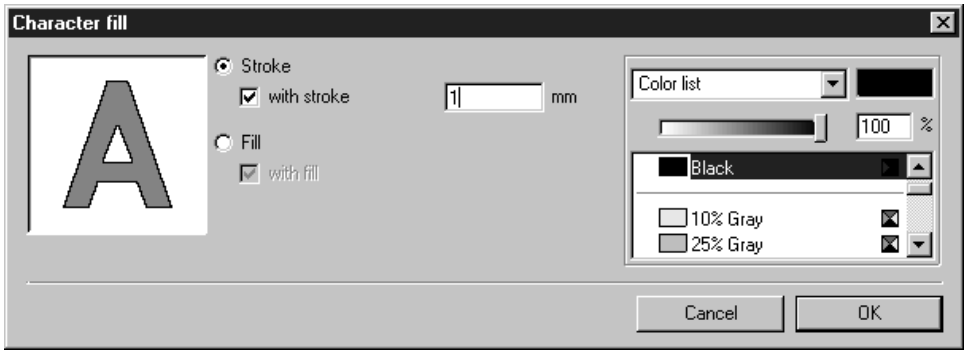

Your changes will only be valid if you click **OK**. Clicking **Cancel** exits the dialog box without any changes being made to the character fill box.

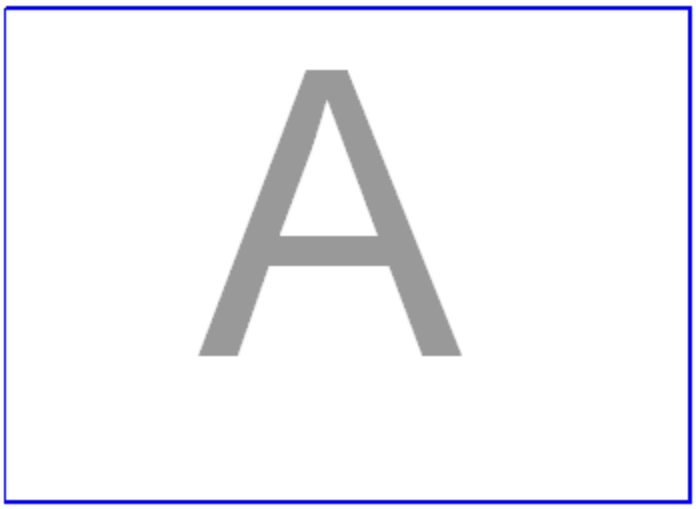

Note

Text characters with contour are displayed on the screen like filled text characters. The contour is only visible when the text is printed out or when it is converted to another format.

Text Background

Use this command to control the background of a text.

Here, you have the option of creating text elements so that they are isolated from other elements. This improves the legibility of the text. Isolation is performed using the background of the text element.

Use the arrow cursor to select the desired text elements and choose menu command **Text background**. You can also choose this command if you are in the process of editing a text element. The following dialog box appears:

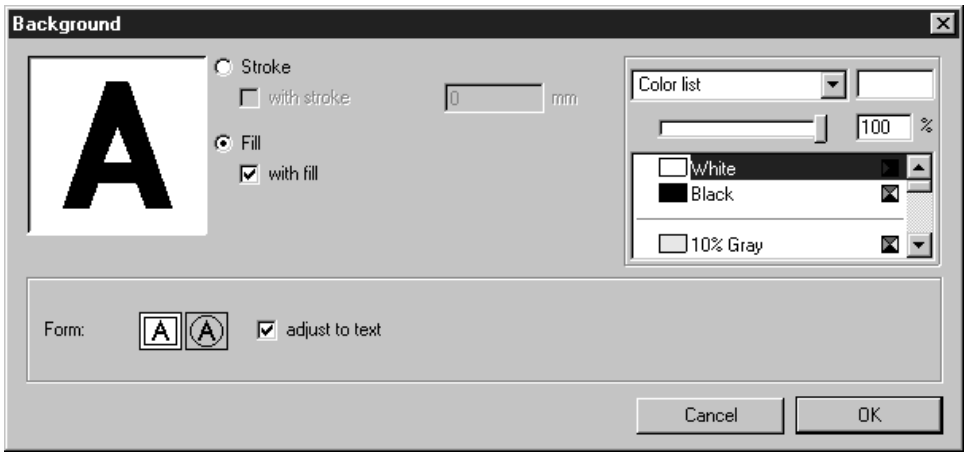

The dialog box allows you to change the appearance and size of the background. Upon starting the program, the text elements are generated as shown above, i.e. with a white, rectangular background. The size of the background depends on the size of the text. The illustration shows the size of the field against a dark background.

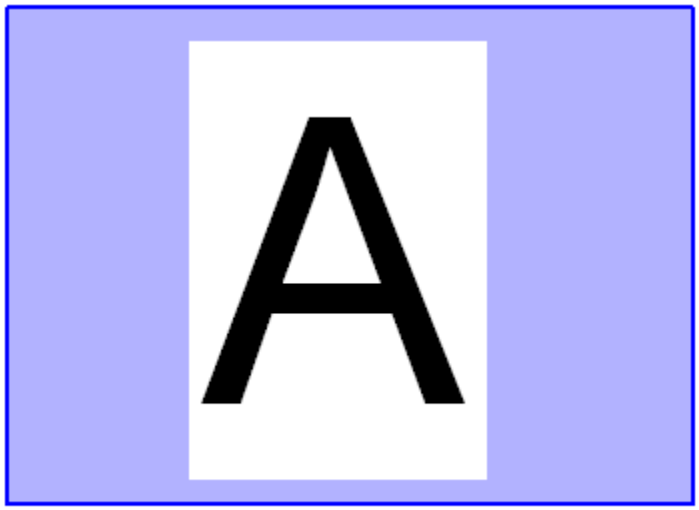

If you have selected **Fill** and **With fill**, you can select a color for the background. The color selection area gives you two options for doing this. You can select a color from the color list or set your own color.

Note

You wish to apply a new color to other text elements. It is expedient to define the new color once in the ***Fills*** *window. This color then also appears in the color list for* ***Character fill****. You can then select the color immediately. See* *Show Fill Window on page 408* *for details.*

The background fill is removed if you click on the tick in the **With fill** box. The tick disappears.

To set an outline for the background, click **Stroke** and **With Stroke**. In the entry field, specify the value for the width of the outline stroke. Just like for the fill, you can create a color in the color selection area for this contour.

The following element has been created so that the background has an outline of 0.5 mm black and a fill of 40%.

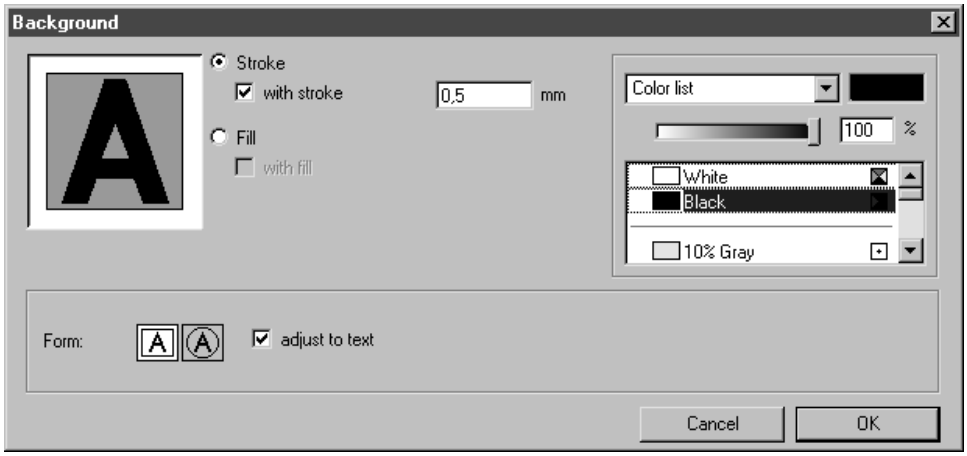

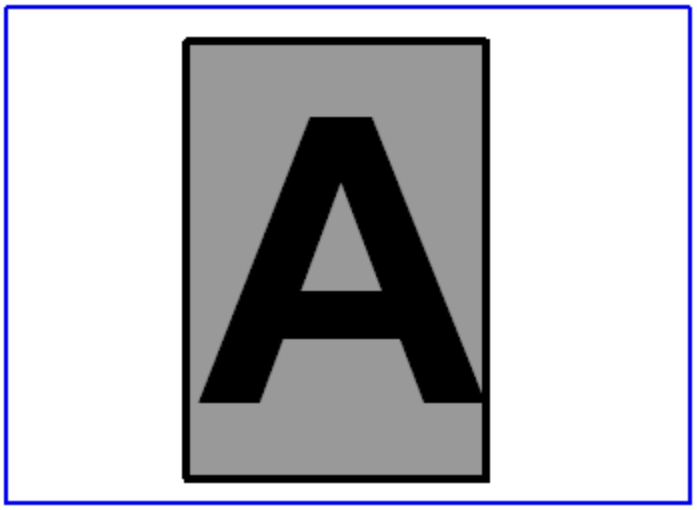

In the lower half of the dialog box you can specify whether the background is to be rectangular or circular. If you want to specify the dimensions yourself enter the width and height - or a diameter in the case of a circle - as shown.

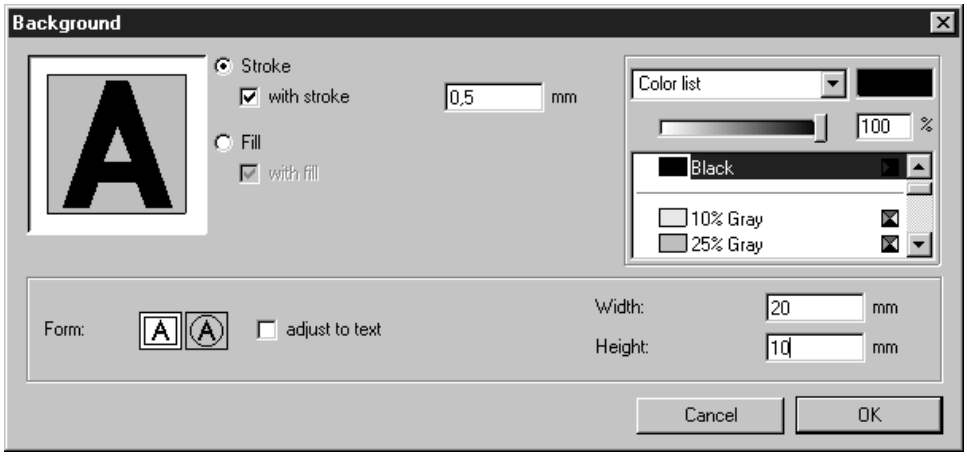

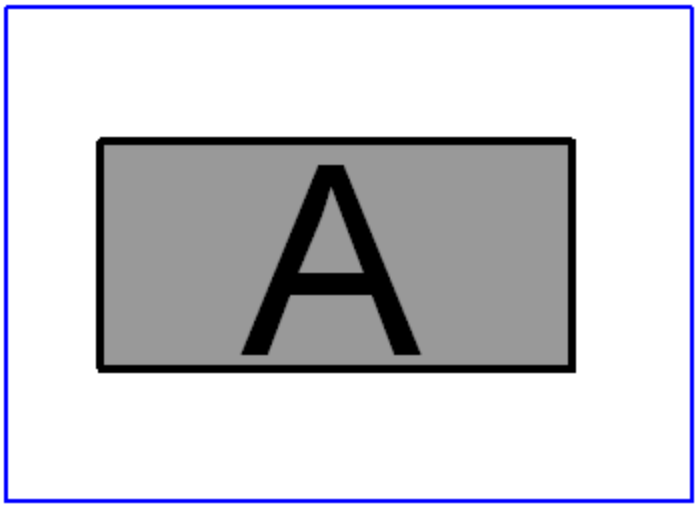

Convert to Paths

This command allows you to convert text elements to Bézier paths.

Select the required text element with the arrow cursor and then choose the **Convert to paths** command.

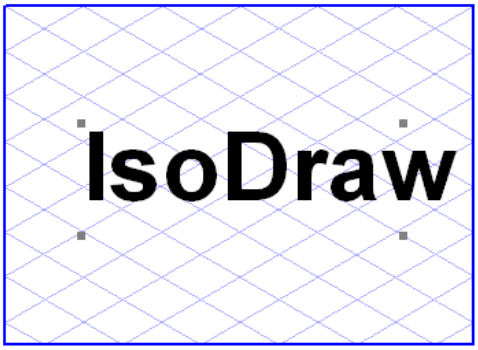

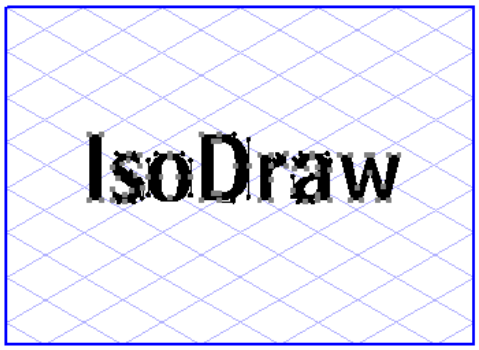

You can now process the converted text element using the Bézier path functions, e. g. to create a logo.

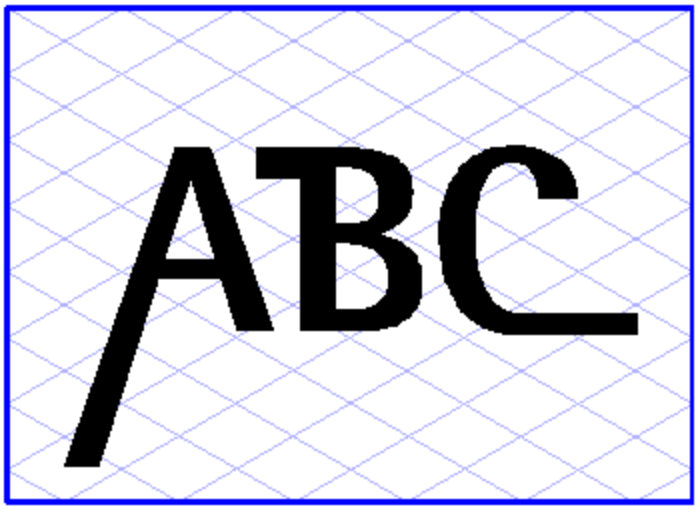

Note

You can only ever convert an entire text element. It is not possible to convert individual characters of a text element.

If you convert a text element, you will lose the graphical attribute ***Stroke*** *from* ***Character fill*** *and the settings for the* ***Text background****. The fill for the text element is retained.*

6
Window Menu

A number of commands in the **Window** menu can be selected by means of keyboard commands. If there is a key combination command code, it is indicated next to the command text.

The figure shows which commands in the **Window** menu can be selected using a command code.

The **Projection** and **Display** commands are only active in 3D mode.

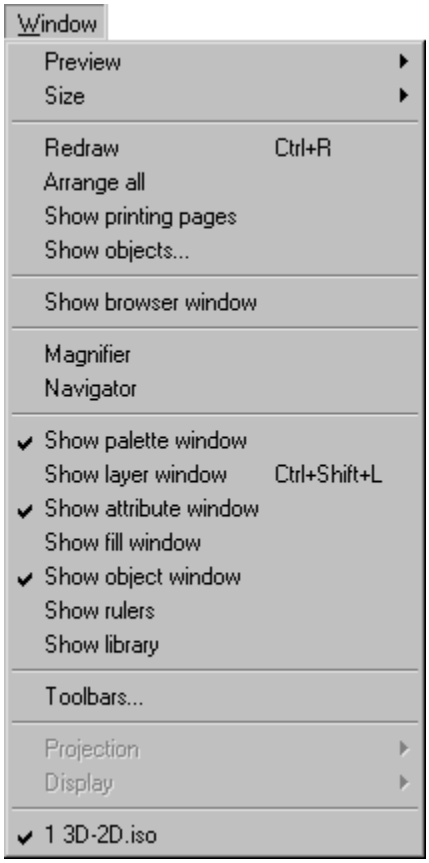

Preview

Your drawings can be displayed and edited on the screen in either drawing mode or preview mode. You can choose between the two different display modes by selecting the command **Preview** in the submenu. A check mark before the entry indicates that preview mode is activated, otherwise you are in drawing mode.

Elements are shown in simplified form in drawing mode. All pens are displayed in a uniform thickness along with their set screen color. Threads are sketched only roughly, while fills and halos are not shown at all.

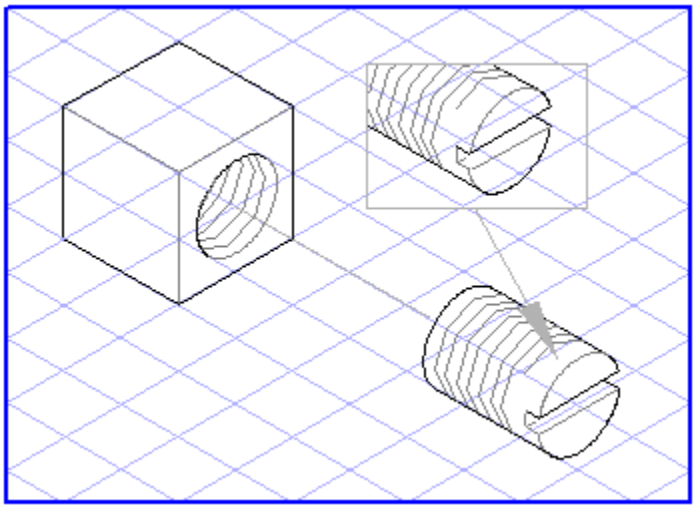

On account of this simplified form of display, the screen is redrawn much faster in drawing mode than in preview mode. Detail work is facilitated by the uniform line thickness of the elements which remains the same for all enlargement factors.

Note

The color of the elements is also influenced by the layer color (see *Show Layer Window on page 345**).*

Preview

In preview mode you see the drawing as it will be printed or exported, thus providing you with an important monitoring instrument. This allows you at all times to check the structure of the illustration, the execution of details and the selected means of representation (e.g. line thickness). It is also advisable to check the clarity of the drawing, particularly in its original size.

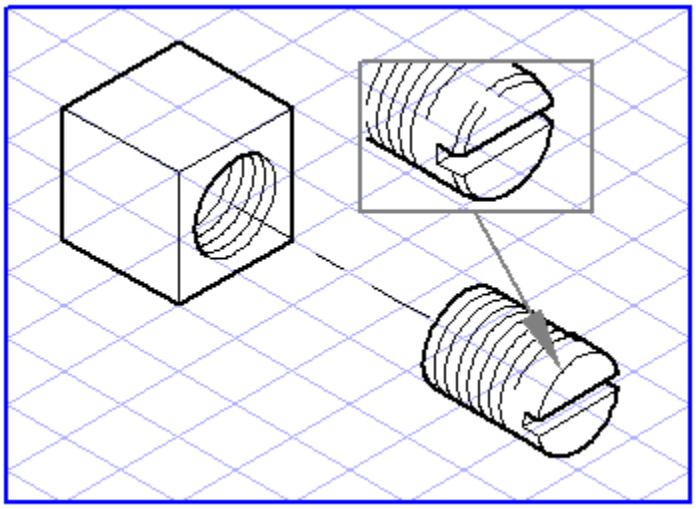

You should check the final status of the illustration in preview mode prior to printing.

Note

The possibilities offered by Arbortext IsoDraw can easily lead you to work with a higher enlargement factor than necessary. This can result in you drawing details which will show up later as no more than a black dot. A small tip for you: Switch to preview occasionally. If your screen suddenly becomes a mass of black you should perhaps simplify the illustration a bit.

Show EPS Preview

With preview selected, you can also choose whether certain elements which are not so important for the drawing are shown in simplified form. These include EPS graphics from other programs which you have placed on the drawing. If a check mark is shown in front of command **Show EPS preview**, the graphic will be shown in coarse form in preview mode (if available). If the EPS file concerned does not contain a preview, or the command is not checked, a simplified form which is also used in drawing mode will be displayed.

If the command is not checked, however, a simplified form which is also used in drawing mode will be displayed.

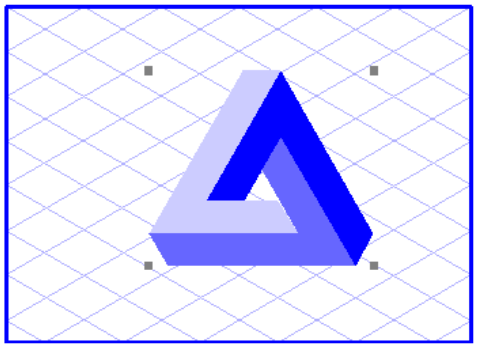

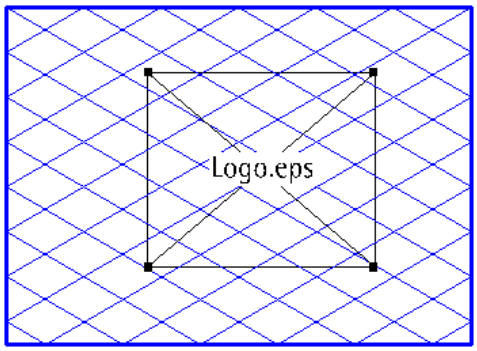

Show Fills

Element fills are only displayed in preview mode. However, it is possible to switch the display of fills on and off as required using the **Show fills** command in order to make it easier to edit objects, for example.

Show Image Elements

Large image elements have a considerable effect on the screen redraw. This command allows you to determine whether image elements are to be displayed in the preview. If the command is not checked, however, only a place holder is displayed instead of image elements.

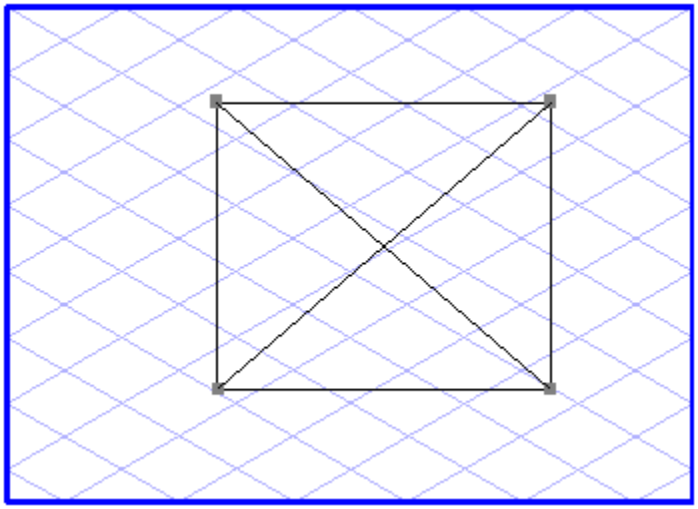

High Image Quality

It is often not necessary to see image elements in full resolution when concentrating on other sections of the illustration. If this command is checked, all image elements are displayed in full resolution. If it is not checked, the image elements are displayed in reduced resolution. This setting also has an effect on the time required for the screen redraw.

This command can only be selected if menu command **Show images** has also been selected.

Size

The submenu **Size** allows you to select the enlargement or reduction factor you want to use for your drawing on the screen.

The current enlargement factor is indicated by a check mark. It is displayed in the window bar at the bottom.

When you select **Extent**, the enlargement factor is set so that all the elements of the drawing can be seen in full-screen view.

Full page means that the drawing fills the entire window area available. If you select **Size ▸ other** a dialog box will appear. There you can enter a value in %.

You can also change the size of the screen section by keyboard command or mouse (see also *Drawing Basics Tutorial*).

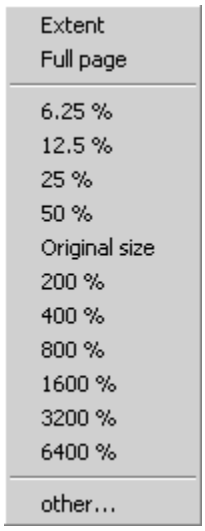

The **Size** submenu also appears if you click the display field in the window bar at the bottom.

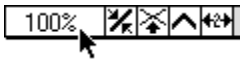

The following keyboard command and mouse combinations also change the drawing size on the screen.

Function	Keyboard Commands
Enlarge	CTRL+ALT+right-click or rotate the mouse wheel backward
Reduce	CTRL+ALT+UP ARROW+right-click or rotate the mouse wheel forward
Original size	SHIFT+> or HOME
Full page	SHIFT+< or END

Redraw

The **Redraw** command lets you redraw the screen.

In order to redraw the screen as quickly as possible, the entire screen is not redrawn when the screen contents are changed. It may thus be the case, for example, that parts of deleted elements which are newly displayed on the screen during a drawing operation are outside the zone. Parts of the deleted element may thus remain visible on the screen even though they are no longer present in the drawing.

When the menu command **Redraw** is selected the screen is redrawn and the drawing displayed in its current status.

Arrange All

You can use the menu command **Arrange all** to organize your screen. If you have opened several Arbortext IsoDraw files or various working windows such as the attribute window, this command can be used to sort all the displayed windows.

The file and working windows are positioned one behind the other (separately in each case). You now have simple access to the file or the working window of your choice.

Show Printing Pages

You can use the menu command **Show printing pages** to display the size of the printing pages on your drawing sheet. It is most expedient if you set the screen display in submenu **Size** to **Full page** before you display the printing pages. You

can now see the drawing sheet you have created (see *Format* dialog page in Preferences on page 108) and the size of the printing pages you have selected via menu command **File ▸ Printer Setup**.

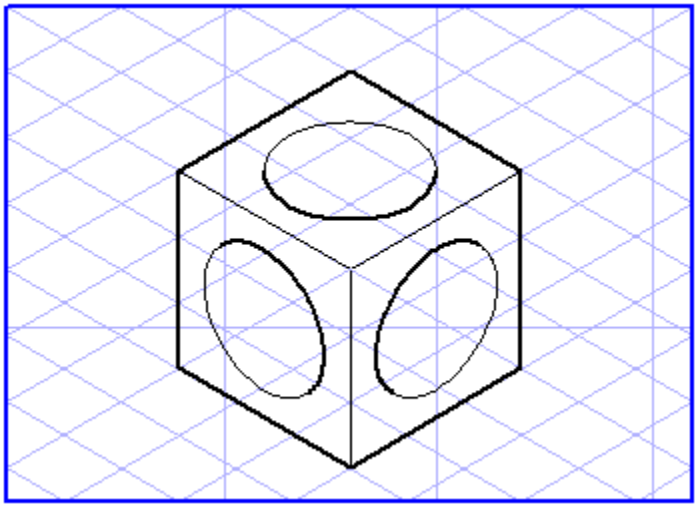

Note

Even if, for example, you have selected size A4 for both the drawing and the printing page, the displayed printing area will be smaller than the drawing sheet. This is due to the fact that your printer generally does not print along a small margin of the page, thereby making the actual printing area smaller than the printing page. You can also influence the size of the printing area with the ***Print overlap*** *option of the menu command* ***Print Setup****.*

Show Objects

Using menu command **Show objects**, you can display objects from the current file. If the command is active, this is shown with a check mark in front of the menu command. When you select the command, the following dialog box appears:

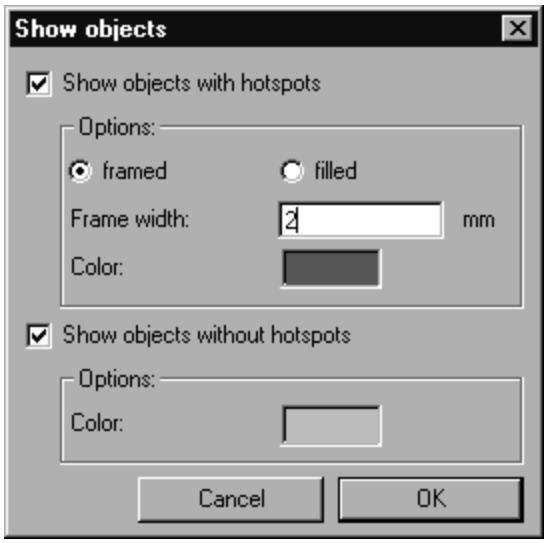

If you have checked **Show objects with hotspots**, all the hotspots in the first selection color will be highlighted. You can toggle between highlighting the hotspots with a frame or total highlighting.

If you have checked **Show objects without hotspots**, the contour of objects without hotspot attributes will be displayed in the second selection color.

You can display the two selection options individually or together.

Note

If one of these options is activated, moving over objects with the mouse causes a special object tip to be displayed containing the object's ID and name.

Show Browser Window

Using menu command **Show browser window**, you can show or hide the **Browser Window**. When Arbortext IsoDraw is launched, the **Browser Window** is hidden if it was not open during the last session. Selecting the **Show browser window** command opens the **Browser Window**. It is closed by launching the command again or by clicking the **Close** button in the window.

Browser Window Content

The **Browser Window** displays all the folders that you have selected in the **Browser Window** dialog page for the **Preferences** menu command.

The names of the selected folders are depicted along with the path to the storage location. If you selected **recurse subdirs** on the dialog page for preferences, the entire structure of the selected folder is displayed with all subfolders and all the files contained therein. The extension on every file name indicates the file format so that you know immediately how you can use the file.

When the browser window is open, structural changes are automatically updated within the selected folders. The interval between updates is set under **Timeout** on the **Browser Window** dialog page for the **Preferences** menu command.

Note

*You cannot change the name or storage location of a selected folder. If a folder is renamed or if its storage location is changed, you will have to reselect the folder on the **Browser Window** dialog page for the **Preferences** menu command.*

Structure of the Browser Window

When you select the **Show browser window** menu command, the **Browser Window** appears as illustrated here:

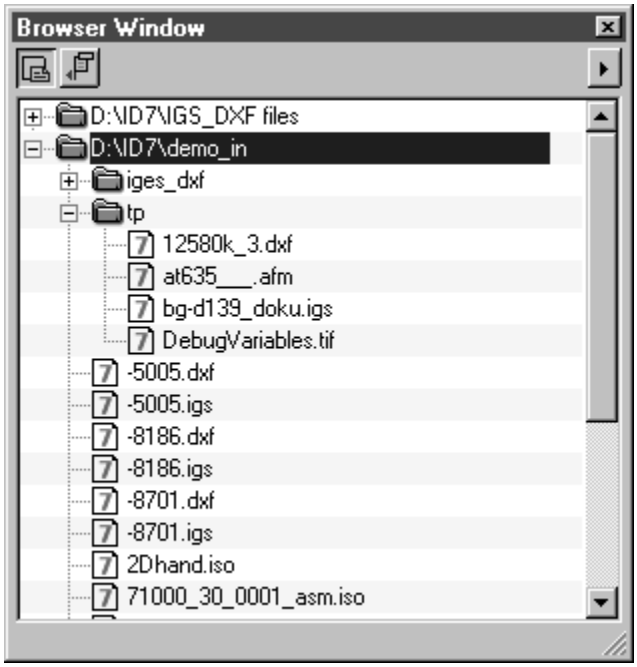

You will see two buttons  containing symbols just above the list of selected folders. If you click the left button, all the selected files are pasted into the current file. If you click the right button, all the selected files are placed.

All folders preceded by a symbol contain further nested subfolders and/or files. Clicking on the **+** symbol reveals folders and files in the next level down. If you hold down the CTRL key when clicking the **+** symbol in front of the file name, all the objects contained within will become immediately visible. One click on the **+** symbol turns it into a **-** symbol. Clicking the **-** symbol closes the level or the entire folder structure.

Clicking the arrow in the top right corner of the **Browser Window** opens a submenu with two commands:

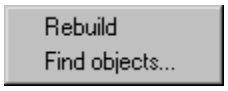

Rebuild

If you select this command, the contents of the **Browser Window** will be updated. Only the selected folders will then be visible.

Find Objects

This command enables you to quickly find a file or folder in the **Browser Window** list. Depending on the setting, you can also select files or folders whose name contains a particular part of a name.

When you select the command, the following dialog box appears:

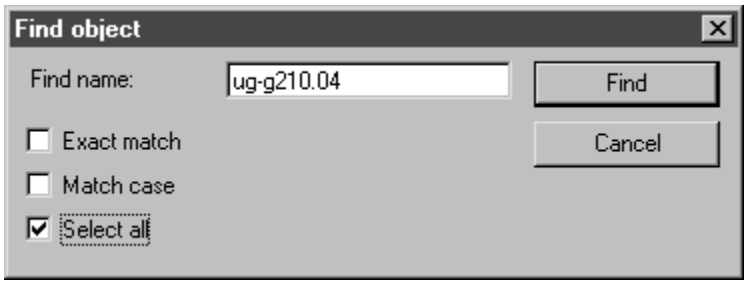

Find name

Here you can enter the whole name or part of a name that you want to find.

Exact match

If you click this option, only names that exactly match the name entered are found.

Match case

If this option is selected, the name search differentiates between upper case and lower case letters. If the data was entered in lower case letters, as in the dialog box above, only those names that contain the entry in lower case letters will be found.

Select all

Use this option if you want to find several names that have part of the same name in common. It finds all names that share a part of their name with the name entered under **Find name**.

Clicking on **Cancel** exits the dialog box. The command is not executed.

After confirming with **OK**, the names are shown selected in the **Browser Window**.

Working with the Browser Window

You can paste or place files listed the **Browser Window** as follows:

1. Click **Paste** or **Place** at the top of the **Browser Window**.
2. Select a file in the **Browser Window** list.
3. Drag the selected file into the current working window.

Import Dialogs when Pasting and Placing Files

Import dialogs on the relevant format are not displayed when pasting or placing a file. The same settings are always adopted as were used the last time the file format was imported.

Files with Layers

If Arbortext IsoDraw or DXF/DWG files containing layers are being pasted or placed, these layers are converted into objects. The structure in the **Objects** window changes. The figure on the left shows the **Objects** window for the opened file, the figure on the right shows the **Objects** window once the file has been pasted. After being pasted, the entire file contents are positioned on the standard layer of the file `test_layers` with the layers as objects.

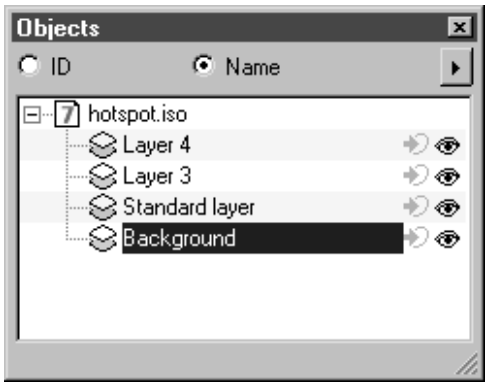

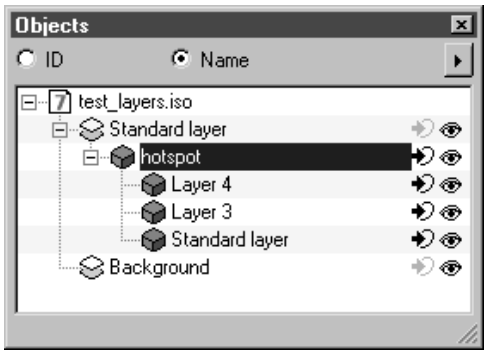

Pasting and Placing in a Working Window

You can drag as many files as you wish onto the same working window. In certain circumstances, you can also use a combination of pasting and placing.

Note

If you have pasted a 3D file, it is opened in 3D mode, as usual.

Files with 2D elements cannot be pasted in 3D mode.

When files have been pasted in 3D mode, only 3D files can be additionally pasted.

To be able to combine a pasted file with other files in a working window, you must convert the pasted file in 3D mode by projecting it into a 2D file (camera button). Once in 2D mode, as many additional 3D files as you wish can be pasted or 2D files placed in the working window. Naturally, you can also use the tools and functions in 2D mode as normal.

Magnifier

When you select this command, the **Magnifier** window appears. This tool is useful for taking a closer look at components or sections of a large drawing; for example, if you want to search for a particular part on a spare parts diagram with many parts or check an item number.

By placing the cursor in the corresponding position, you can view an enlargement of the required section of the drawing in the **Magnifier** window.

When the command has been selected, the area around the current cursor position is shown enlarged in the **Magnifier** window.

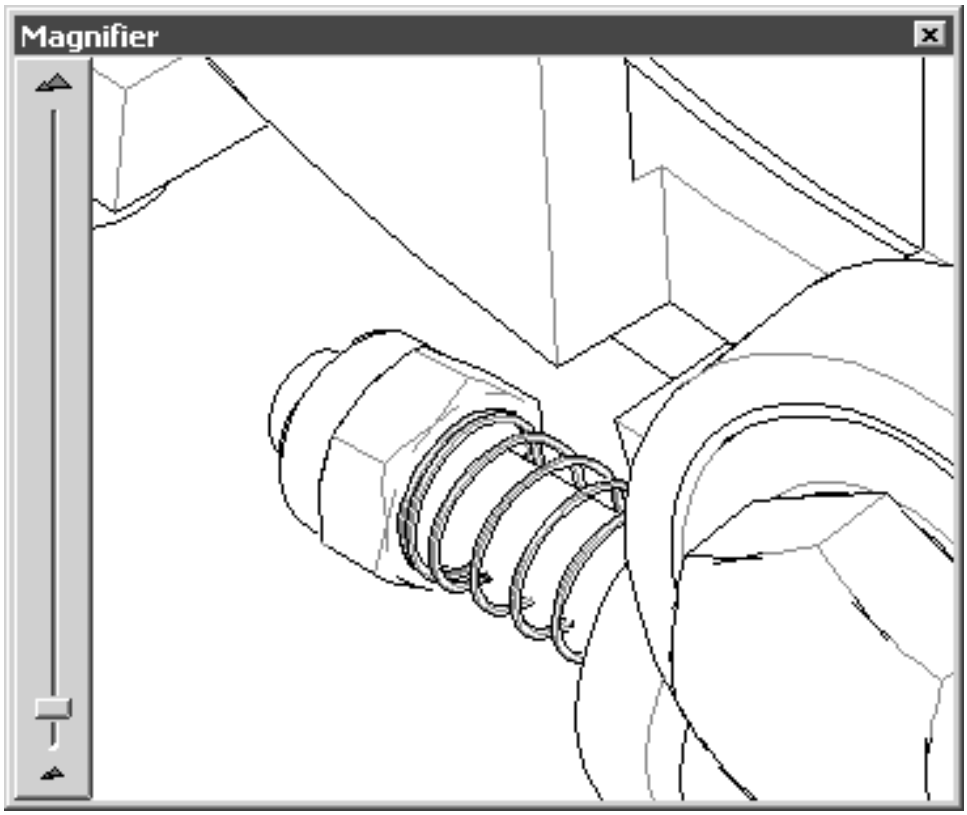

When you move the cursor over the drawing, you will see the new section of the drawing around the new cursor position in the **Magnifier** window.

The enlargement factor for the display is set by means of the sliders along the sides of the window. The enlargement depends on how big the drawing appears on the drawing sheet.

The window can be changed in size. To do this, position the cursor on a corner point or a side of the window and, holding down the mouse button, move the mouse. The size of the window and depicted section are both altered.

The **Magnifier** window can be disabled by re-selecting the command or by clicking the window's **Close** button.

3D Mode

Applies to Arbortext IsoDraw CADprocess only.

In 3D mode, the display in the **Magnifier** window does not depend on the position of the cursor. All currently selected objects or elements are displayed enlarged in the magnifier window.

If you have selected the command, the currently selected objects or elements are displayed in the **Magnifier** window.

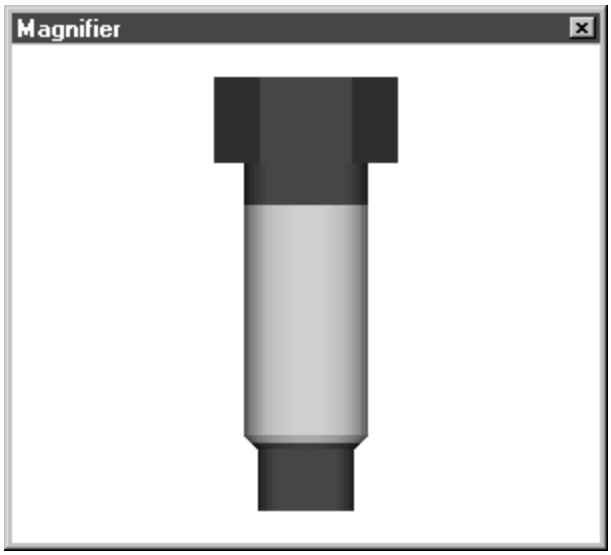

As soon as you alter your selection, the display in the magnifier window changes to match it.

If you click in the window with the cursor and hold down the mouse button, you can rotate the display freely around its center point. This function is very useful, for example, for viewing the shape and orientation of parts in any projection. Parts obscured by others can also be viewed in any orientation. Any changes you make in the magnifier window do not affect the drawing in 3D mode. The drawing remains unchanged.

The display mode matches the drawing's setting in 3D mode. If changes are made at various points in time while editing the drawing, these are adopted in the magnifier window.

The window can be changed in size. To do this, position the cursor on a corner point/side of the window and, holding down the mouse button, move the mouse. The size of the window and display size are both altered.

The magnifier window can be disabled by re-selecting the command or by clicking the window's **Close** icon.

Navigator

Selecting this command opens the **Navigator** window. The red frame on the reduced overall view of the drawing shows which drawing area is currently visible on the drawing sheet. If you are currently working on a detail of the drawing, you

can change to another area of the drawing rapidly without changing the display scale and without losing sight of the overview. You simply need to move the frame in the **Navigator** window.

When you select the command, the red frame appears in the window over the section of the drawing shown on the drawing sheet.

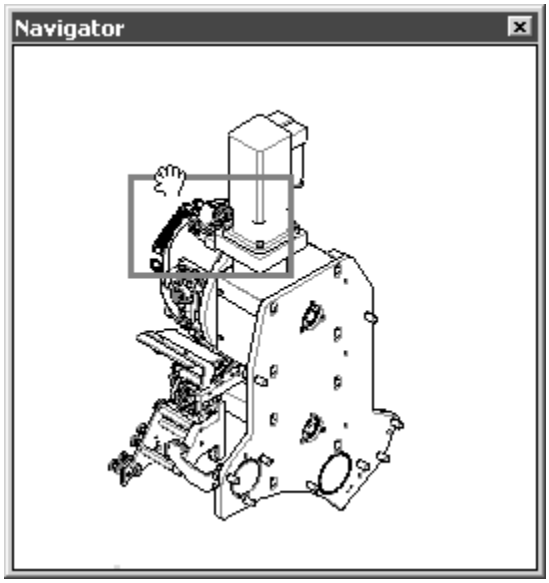

If you want to see another section of the drawing on the drawing sheet, you must move the frame.

To do this, position the cursor on the red frame. The cursor changes to a hand. You can now freely move the frame to a new position by holding down the mouse button.

When you change the enlargement of the drawing sheet, the frame position in the **Navigator** window changes accordingly.

You can change the size of the window.

The **Navigator** window can be disabled by re-selecting the command or by clicking the window's **Close** button.

Show Palette Window

Use menu command **Show palette window** to display or deactivate the Toolbox.

The toolbox is displayed when Arbortext IsoDraw is first started. You can deactivate the toolbox by choosing the **Show palette window** menu command. The check mark in front of the menu command and the toolbox itself will disappear. Reselecting the command will display the toolbox again.

Clicking the **Close** button in the title bar of the toolbox allows you to blend it out, too.

Descriptions on how to use the individual tools are provided in the Palette Window Tools sections.

When closing Arbortext IsoDraw, the positions of any palette windows which are open are saved. These windows will be opened again at the same point the next time Arbortext IsoDraw is started.

Show Layer Window

Using the **Layers** submenu, you can display or deactivate the **Layers** window. The **Layers** window is first hidden after Arbortext IsoDraw is started. You can open the **Layers** window by selecting the **Show layer window** command. Selecting this command again or clicking in the **Close** button of the window closes the **Layers** window.

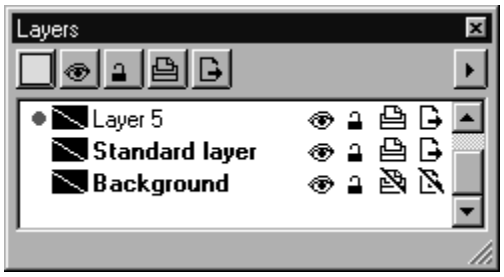

The **Layers** window shows the layers of the current file. Clicking the arrow at the top right opens a pop-up menu showing the commands of the **Layers** menu. The window can be moved anywhere within the working area and changed in size.

You can picture the individual layers of an illustration as overhead transparencies laid on top of each other, each layer can be handled separately. Each element of your illustration belongs to a layer. Since the layers can have different attributes, e. g. visibility, you can control groups of elements by means of layers.

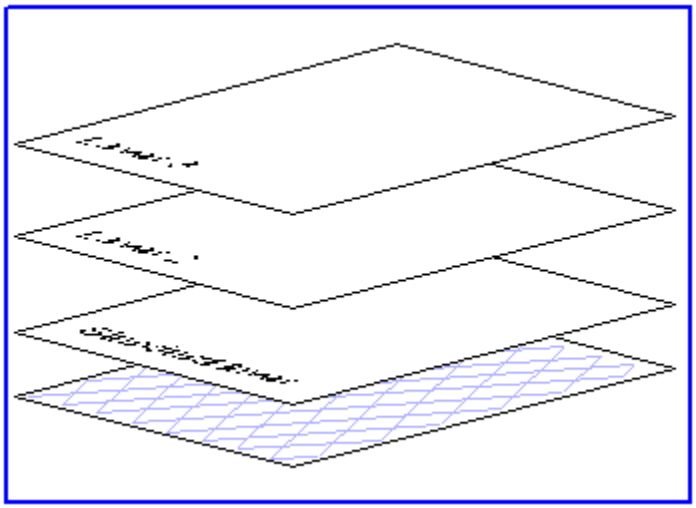

Note

It is quite possible to create simpler illustrations on just one layer. For complex drawings it is advisable to simplify editing the elements by splitting them up over several layers. Working with layers in this way makes it possible, for example, to create auxiliary constructions or notes on separate layers, which can then be either removed or deactivated when the illustration is printed out or exported.

The **Layers** window helps you organize the work with layers.

Layers of the Illustration

Arbortext IsoDraw automatically creates the `Standard layer` and `Background` layers in a new file. It is not possible to delete or rename these layers. In addition, you can create as many further layers as you want.

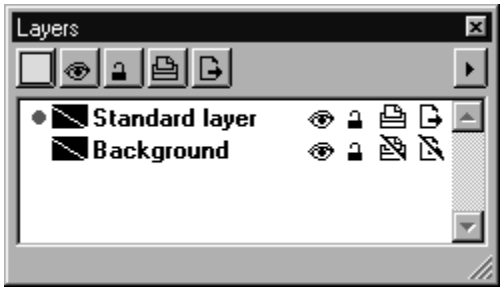

Active Layer

The standard layer is marked initially with a red dot in front of the name, identifying it as the active layer. The active layer is assigned all the elements which you create. You select another layer as the active layer by clicking the empty field in front of the name of the layer you want to activate.

Identifying Empty Layers

The **Layers** window also allows you to see whether a layer is empty, i.e. whether it contains elements or not. If it is empty, the name is shown italicized and inset as with `Layer 3` and `Layer 4`.

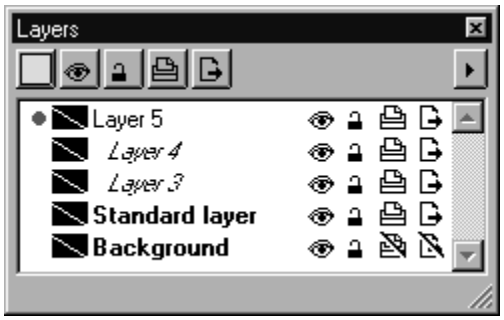

Note

You can use the ***Delete layer*** *command while holding down the SHIFT key to delete all empty layers in one stroke.*

Naming

You can also change the names of the layers you have created. Double clicking the name of a layer opens a dialog box in which you can enter the new name. This window also lets you set a screen color for the layer.

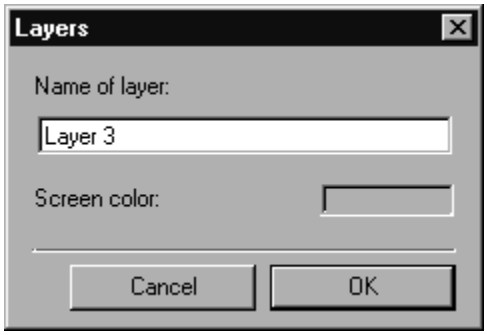

Note

No two layers within a file are allowed to have the same name. The names `Standard layer` *and* `Background` *cannot be changed.*

Clicking the color box opens the **Colors** dialog box. Select a color from this window. Confirm your selection in the **Layers** dialog box with **OK**. You can control the use of the color with the layer settings.

Layer Attributes

Each layer has five different attributes which you can activate or deactivate separately. This is done by clicking one of the symbols on the right of the layer's name.

If you want to change the attributes of all layers at the same time, click one of the symbol keys in the symbol bar at the top. The `Background` layer and the attributes `visible` and `locked` for the standard layer will not be changed, however.

As mentioned in the last section, you can assign an identifying color to a given layer. This color is used to identify the elements belonging to the layer in question. This is done by drawing all the elements on the layer in this screen color when the color is active.

If the color is not active, the elements will be drawn in the colors defined by pens and fills.

Note

The identifying color does not affect the printout. The printout is always based on the colors defined for pens and/or fills.

A layer can be visible or not . If it is visible, its elements are displayed on the screen.

Note

*Even if the layer is visible, locked elements which have been concealed with the **Hide** command (in the **Element** menu) are not displayed.*

A layer can be locked or unlocked . If it is locked, you cannot select the elements of this layer.

Note

*Elements which have been locked with the **Lock** command (in the **Element** menu) are not affected by this setting.*

A layer can be printable or not . If it is printable, its elements will be printed out. This variant is useful e.g. for auxiliary constructions or notes.

A layer can be exportable or not . If it is exportable, its elements will be exported. This variant, too, is useful for elements which you need in the Arbortext IsoDraw illustration but not for further editing in the DTP program.

Note

The active layer is always visible and not locked. The relevant symbols are not accessible.

When you create a new file, the background layer is identified as being not printable and not exportable. This presetting is designed to prevent image elements which are used as templates from being either printed or exported.

Sequence of Layers

The sequence of the layers on an illustration plays an important role. Layers which are at the front hide parts of layers located at the back.

You can change the sequence of layers in the **Layers** window. First select the elements you want to change. Then drag it with the mouse to the point in the list where you want to paste it. As soon as you release the mouse button, the layer will be pasted into its new position.

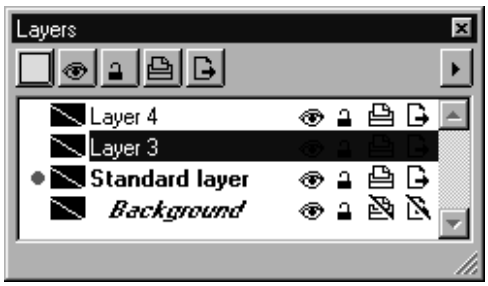

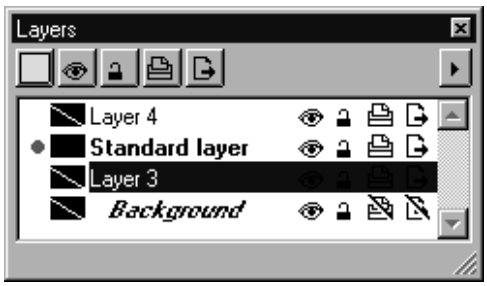

Note

The background layer is always at the bottom. It cannot be moved.

Background Display

It is possible to use preference values to control the display of image elements on the background layer, e.g. if a photo is to be used for tracing. Double clicking the name of the background layer opens the relevant dialog box.

Note

A detailed description of the dialog can be found in *Preferences on page 108*.

Selecting Layers

When you select elements, the corresponding layer is also selected in the **Layers** window. If you have selected several elements on various different layers, no layer will be selected.

Note

The commands in the pop-up menu for editing layers almost always affect the selected layer. Before you execute one of these commands, you should check whether the required layer has been selected.

You can use the commands from this pop-up menu to edit the layers in different ways.

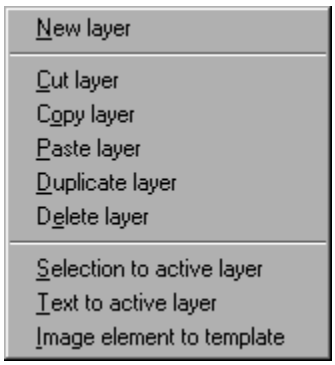

If you open a new window in Arbortext IsoDraw, the `Standard layer` and `Background` layers are created automatically. These layers are protected and cannot be deleted. Should you wish to create additional layers, you can do this with the **New layer** command from the submenu. A new layer is created and will appear in the layer window. The new layer is assigned the name `Layer` and a consecutive number, e.g. `Layer 3`. This layer automatically becomes the active layer, i.e. all elements which you now generate will be assigned to this layer.

You can create as many layers as you want.

You can use the commands **Cut layer**, **Copy layer**, **Paste layer**, and **Duplicate layer** to edit the layer selected in the **Layers** window together with all the elements assigned to this layer.

The **Cut layer** command, for example, allows you to remove the layer and all the elements on this layer from the illustration. If you now paste this layer into another illustration using the **Paste layer** command, the elements included on this layer will also be pasted to the new illustration.

You can copy a layer to another file using drag and drop. To do this, click on the name of the layer and drag it to another file window. Now release the mouse button. The layer will now be copied to the target file.

When copying layers, you may find that there is already a layer with the same name in the target file. If this happens with one of the standard layers, the content of the layer to be copied will be pasted into the existing layer. Otherwise, the following dialog box appears:

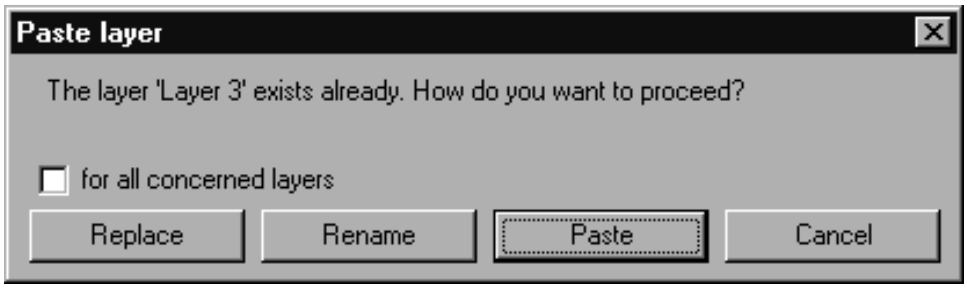

Here, you can select how the layer is to be used. Clicking **Replace** causes the existing layers to be replaced with the pasted ones. Clicking **Rename** causes the pasted layers to be renamed. **Paste** causes the elements of the layers to be added to the existing layers. Clicking **Cancel** terminates the procedure without any changes being made. Use the **for all concerned layers** box to specify whether your selection is to apply to all layers that you are in the process of copying. This only applies for situations where several layers are being pasted at the same time, for example when loading layers from a file. The **Delete layer** command lets you delete a layer together with all its elements.

Drawings imported from CAD systems in particular often show a great number of layers. Many of them are empty and can be deleted in order to give the drawing greater clarity.

You can do this by holding down the SHIFT key and selecting the **Delete layer** command. The following dialog box appears:

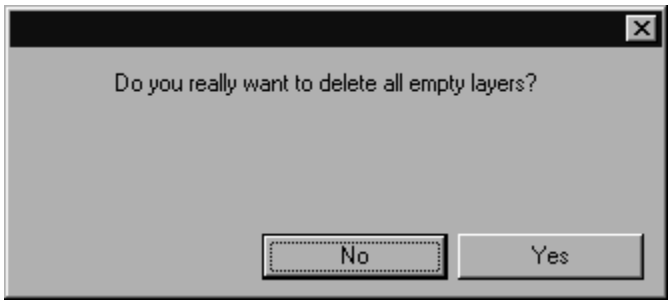

Clicking **Yes** deletes all empty layers in the active file. Clicking **No** aborts the procedure. The command **Selection to active layer** assigns all selected elements to the active layer. The command **Text to active layer** allows you to assign all text elements in the active file to the active layer. If you want to manage all texts on one

layer in order to be able to hide them or edit them separately, for example, you should first create a new layer. This new layer automatically becomes the active layer and you now only need to select the **Text to active layer** command.

Note

This does not include text elements which have been locked, assigned to a locked layer or masked in another element.

The **Image element to template** command assigns selected image elements, i.e. pixel data, to the `Background` layer. The image elements are displayed in the screen color selected for displaying the background.

Show Attribute Window

Using menu command **Show attribute window**, you can show or deactivate the attribute window. When Arbortext IsoDraw is started, the attribute window always appears in the top right hand corner of the working window. Calling up command **Show attribute window** or clicking the **Close** button in the window closes the attribute window. Reselecting the command will display the attribute window again. The attribute window can be moved at will over the working area and its size can be changed.

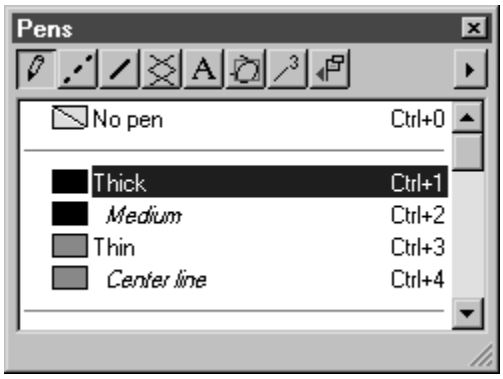

The attribute window gives you access to a wide range of important element attributes. In the attribute window's symbol bar, you will see a total of eight symbol keys representing various attributes. Click one of these keys to show the required attributes list in the window. These attributes are pens, linestyles, halos, grids, text formats, viewports, callout styles, and the window for placed files.

If you wish to view several lists at once, you can also tear off the individual toolboxes. To do this, click one of the keys and, holding down the mouse button, drag the window to the required position. Then release the mouse button.

Pens Window

The **Pens** window is one of the eight windows which you can select in the attribute window.

The **Pens** window shows the pens available for the current file and the command `No pen` which is used for elements without contours. Located in front of the pen name is a box which indicates the screen or printing color (depending on whether you are in drawing or preview mode).

You can also tear off the window, move it anywhere in the working area and change its size. Clicking the **Close** button closes the **Pens** window.

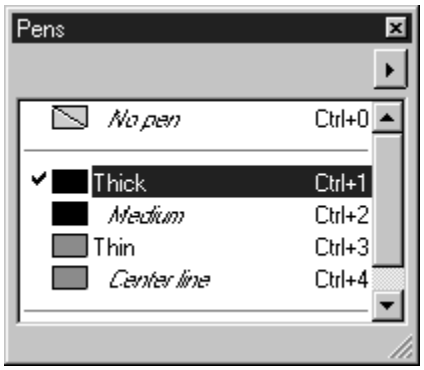

Clicking on the arrow in the top right-hand corner opens a pop-up menu containing further commands for editing pens.

If elements are selected, a check mark appears in front of the color box for the pens used with these elements. This allows you to easily identify the pen type used for an element. Pens which are not used are shown indented and in italics.

The current pen is indicated by a highlighted background. If you wish to use another pen, you can do this by clicking the name of the pen you require. The display changes and all the selected elements and elements which are drawn afterwards are drawn with the new pen. Elements which were not selected remain unaffected by changing to the new current pen.

Double-clicking on the name of a pen opens the **Edit pen** dialog box. This window contains the settings for the current pen. You can either change the settings or create a new pen. In doing this, the pen you have selected also becomes the current pen. You can also select the dialog box using the **Edit pen** command in the pop-up menu. A description of how to do this can be found in the following section.

Editing Pens

The contours of elements drawn with Arbortext IsoDraw are determined by four attributes. Line thickness, line style and color control the appearance of the contour itself, while halo defines how the element is isolated from the background. These contour attributes are combined into **pens** which can be assigned to the elements.

You can use pens to organize line thicknesses and other attributes. Each drawn element can be assigned one or more pens. This assignment can be changed subsequently at any time. You can also change the attributes of pens at any time and the elements affected will be displayed automatically with the new attributes. This is of particular advantage if the line thicknesses need to be changed at a later date. In such case, you only need to change the pens and do not have to edit the elements themselves.

Arbortext IsoDraw provides 4 standard pens which cannot be deleted and whose names cannot be changed. **Thick**, **medium**, **thin** and **center line**. Their attributes can be modified, however, in dialog box **Edit pen**.

Note

The procedure for making general changes and extensions to the standard preferences for pens is described under *Preferences on page 108*.

Commands for Editing Pens

To edit a pen, click on the arrow in the right-hand corner of the window and select one of the commands from the pop-up menu. When you select a command, a dialog box appears. The dialog boxes for **New pen** and **Edit pen** are structured in the same way.

The only difference is that, for the **New pen** window, an entry box appears for the name, whereas for the **Edit pen** window, the name of the current pen is already entered. The following description applies for both dialog boxes.

The **Edit pen** dialog box also appears if you double-click on the name in Show Attribute Window on page 352.

Edit Pen

To edit a pen, select the command **Edit pen**. The following dialog box opens:

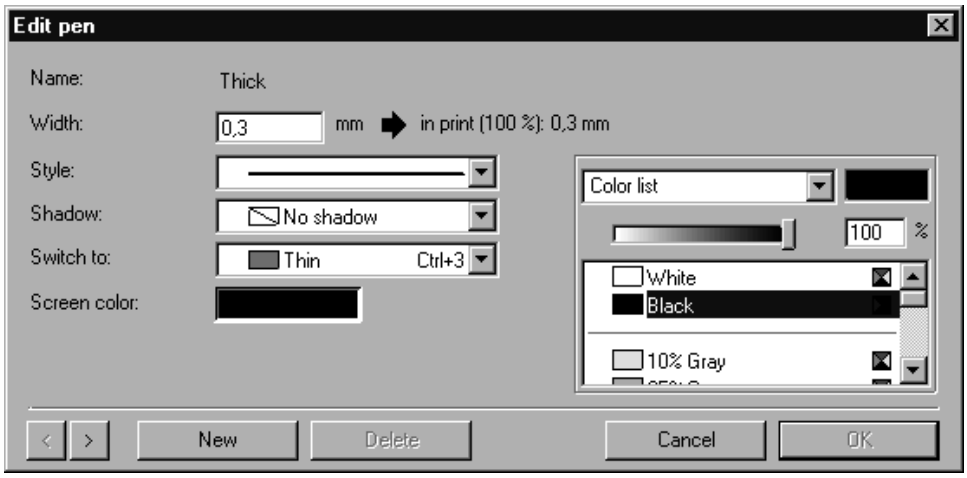

The displayed values refer to the **current pen**. You can page through the list of pens, however, using the two arrow buttons  .

This dialog box allows you to edit the attributes of all the pens which have been defined for the active illustration. You can also create new pens or delete existing ones.

Your changes will only be valid if you click **OK**. Clicking **Cancel** quits the dialog box without changing the pen list.

Note

If you delete a pen, the elements using this pen will be assigned a substitute pen. This change cannot be undone even by canceling the dialog box.

Modifying Pen Attributes

Each pen must have a unique **name**. The names of the four standard pens cannot be overwritten.

You can define the **thickness** of the pen in the next entry field. The scaling factor set under **Printer Setup** and the resulting thickness of the pen in the print appear on the right of the entry field.

Note

All elements are displayed in the same line thickness in drawing mode. The different line thicknesses assigned to the pens are only displayed in preview mode.

Each pen is also assigned a **style**. You can select this from the pop-up menu which shows all the available styles. The **Styles** window section explains how you can create your own styles.

The situation is similar for assigning a **Halo**. The halos which are available are listed in the underlying pop-up menu along with the **No halo** function. The Halos Window on page 370 section explains how you can create your own halos.

The next entry field allows you to specify the **switch pen**. This pen is used when you double-click drawn elements. A line drawn with the **Thick** pen, for example, will be assigned the **Thin** pen after a double-click.

By making an appropriate choice of switch pens, you can also produce chain reactions: Pen 1 switches to pen 2, pen 2 switches to pen 3 and pen 3 to pen 1. Assigning the same pen prevents the pen changing in response to a double-click.

Each pen can be assigned a customized **screen color**. The screen color is only displayed in drawing mode and has no effect on the printed result. Clicking on the colored area calls up the **Color** dialog box. In this window, you can select one of the primary colors available, or define your own color using the color spectrum. Confirm your selection with **OK**.

The **printing color** is defined in the color selection area. Here, you have the option of selecting one of the defined colors from the list or mixing your own CMYK or RGB color. Using the color list and setting a CMYK or RGB color are described in Show Fill Window on page 408.

Creating a New Pen

You can create a new pen by clicking the **New** button. This pen will initially have the attributes of the last pen displayed. Assign the text format a unique name. If a pen with that name already exists, the following warning window appears:

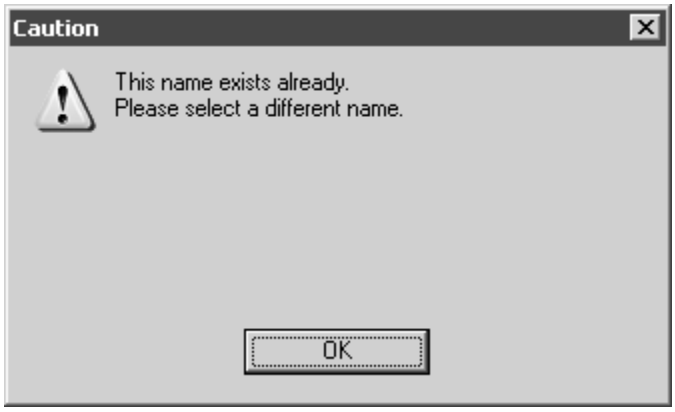

Confirm with **OK** and change the name. You can now change the settings as required.

If you have clicked **New** by mistake or want to abort the creation process, you can delete the pen as described below.

You can also create a new pen by selecting the **New pen** command from the pop-up menu.

Deleting a Pen

You can delete the pen currently displayed by clicking the **Delete** button.

Note

Standard pens cannot be deleted.

The pen will be deleted immediately if it is not being used in the illustration. Otherwise, a substitute pen must first be defined for assigning to the affected elements:

If the style and halo of the new substitute pen match those of the pen you want to delete, the pen will be deleted by clicking **OK**. All elements using the deleted pen will then be assigned the substitute pen.

If, however, the substitute pen has a different style or halo to the pen being deleted, you can choose whether and, if so, how these attributes are to be changed. The following dialog box appears. (The window shown here applies for styles; the window for halos is similar.)

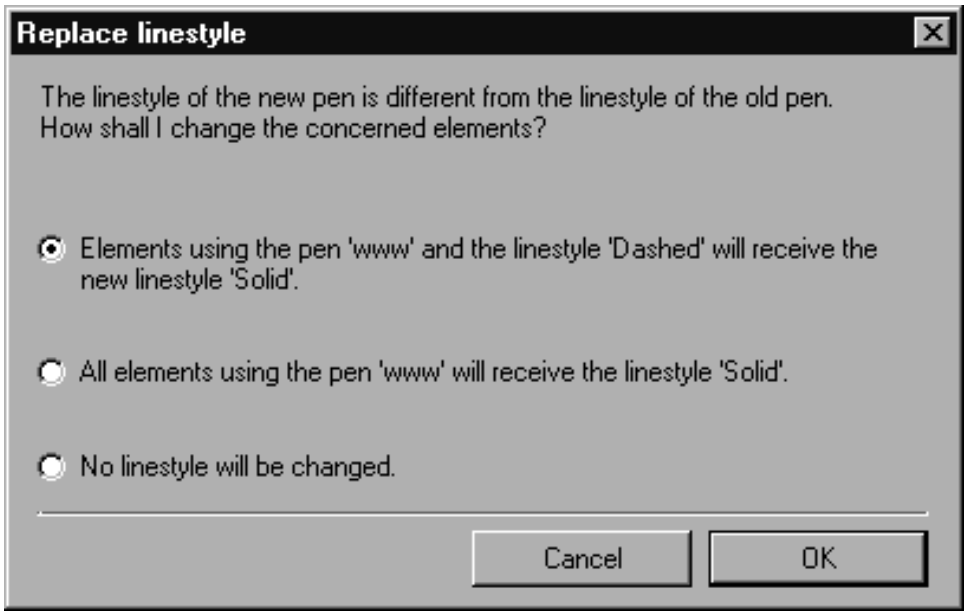

In this case, the pen `www` which is using the style **Dashed** is deleted. The substitute pen, on the other hand, uses the **Solid** style.

If you choose the first option, all elements using the `www` pen and **Dashed** style will be changed to the substitute pen and the **Solid** style.

The second option assigns the **Solid** style to all elements using the `www` pen, even if they do not use the **Dashed** style.

The third option assigns the substitute pen to all elements using the `www` pen without changing the style.

If the halo of the pen you want to delete also differs from that of the substitute pen, an appropriate dialog box will appear at this point.

The selection options for deleting pens are many and varied and must be executed directly in order to avoid conflicts. Once the new attributes have been assigned, the assignment cannot be undone. Consequently, the program will ask you for final confirmation:

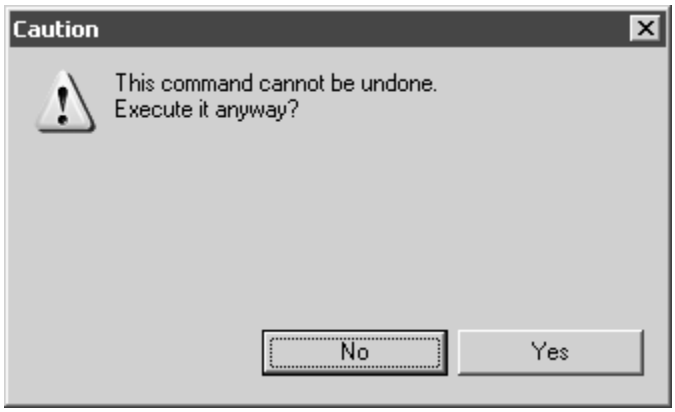

Click **No** if you do not want to make the changes. Click **Yes** to assign the new attributes with immediate effect. While you can still cancel the **Edit pen** dialog box afterwards, the assignments will be retained.

Selecting Pens

You select a pen by clicking the name of a pen in the **Pens** window. The current pen is indicated by a highlighted background.

Your selection has three effects:

- It changes selected elements
- It changes the selected pen into the current pen
- It changes the style and halo of the pen to the current style and halo.

This allows you to change existing elements. Select the elements you want to assign a different pen to. Then select the required pen.

The **current pen**, on the other hand, functions as a preference for those elements you still have to draw. Lines, polylines and Bézier paths which are drawn afterwards will be drawn using the current pen.

All other elements will always be displayed in the line combination **Thick/Thin**.

No pen is used to generate elements without contours. In drawing mode, their contours are displayed in the second element color set under **Preferences**. Elements without contours and fills cannot be seen in preview mode.

Options

You can use command **Options** from the pop-up menu to determine the appearance of **line ends** and **line corners**. The two **Overprint** options also allow you to display hidden elements or element groups in the printout.

Line Ends and Line Corners

First select the elements you want to change. Then choose menu command **Options**. The following dialog box will appear:

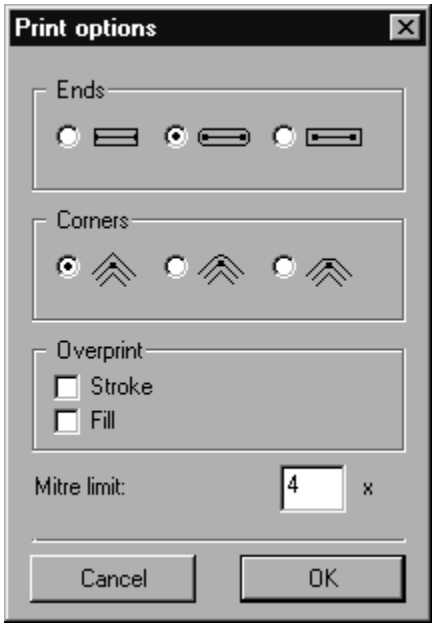

Click the buttons next to the required options for the ends and corners. Then confirm with **OK**. The illustration shows 3 lines of the same length with different line ends.

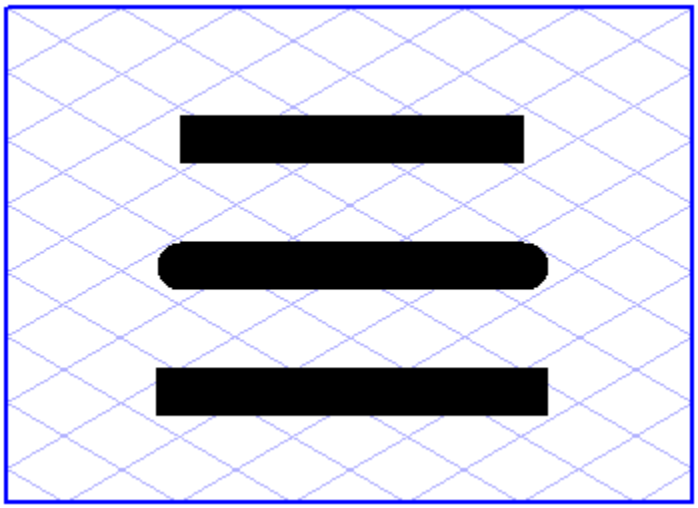

The **line corners** are only significant for Bézier paths with corner points. The top option is the **miter corner**. If you select this option the contour lines will be combined to produce a sharp end.

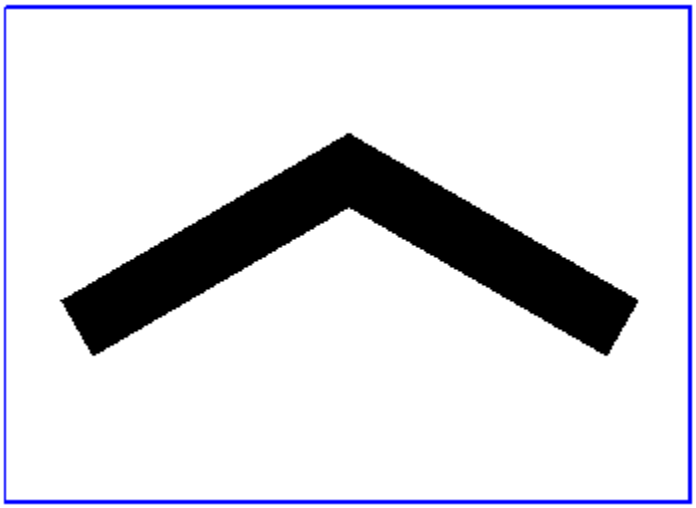

In order to limit the miter corner for sharp angles, you can enter a value in the **miter limit** field which is equal to or greater than 1. The greater the value the longer the tip can be. A standard value of 4 is set.

The left-hand illustration shows a path with a miter limit of 1, while the illustration on the right shows the same path with a miter limit of 10.

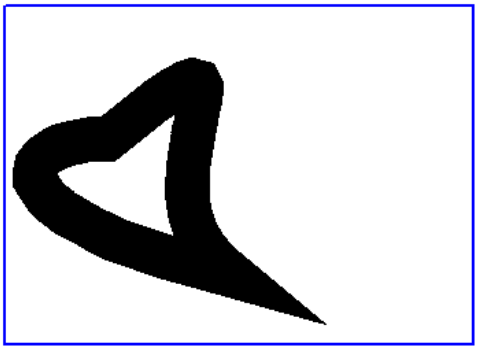

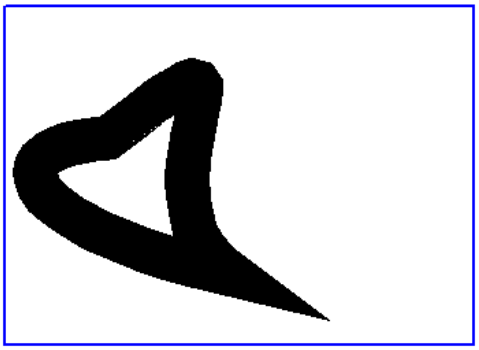

The center option for the line corners generates a **rounded corner**, the lower option a **flattened corner**.

Neither of these options is affected by the miter limit.

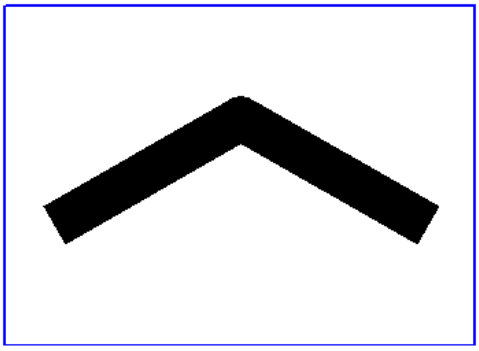

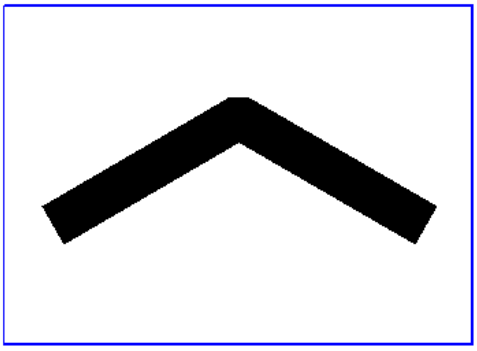

Note

The various line ends are displayed on the screen when you work in preview mode. The line corners can only be seen in the printout.

You can also change the form of the line ends and line corners of an individual element at another location. Select the element in question and call up the **Element info** command from the **Element** menu.

A dialog box appears which, among other things, includes an **Options** button. If you click this button, the same dialog window will appear as after direct selection of menu command **Options** (see Element Info on page 155).

Overprint

Elements or element groups which are hidden by areas of the drawing lying above them are generally not printed. This is also desirable in most instances. Often you may want the colors of contours or fills to mix in the printout, however. This method of printing can give rise to special effects, e.g. transparency effects.

Select the elements to **Overprint** and choose the **Options** command. In the dialog box which then appears check the **Stroke** and/or **Fill** boxes. You can use this option for all element types including for text converted to paths.

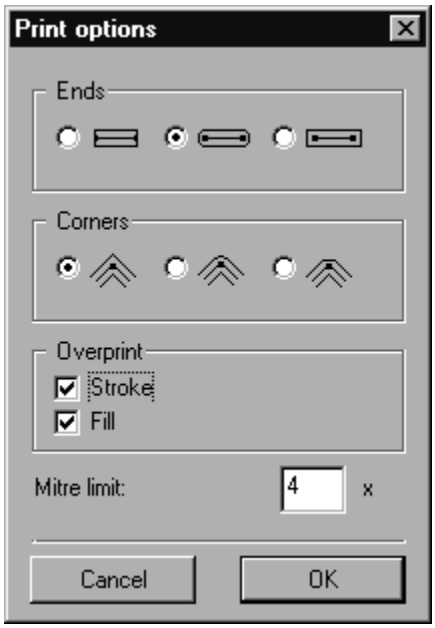

Styles Window

The **Styles** window is one of the eight windows which you can select in the attribute window.

The **Styles** window shows all the styles which are available for the current file. You can also tear off the window, move it anywhere in the working area and change its size. Clicking the **Close** button closes the **Styles** window.

Clicking on the arrow in the top right-hand corner opens a pop-up menu containing further commands for editing styles.

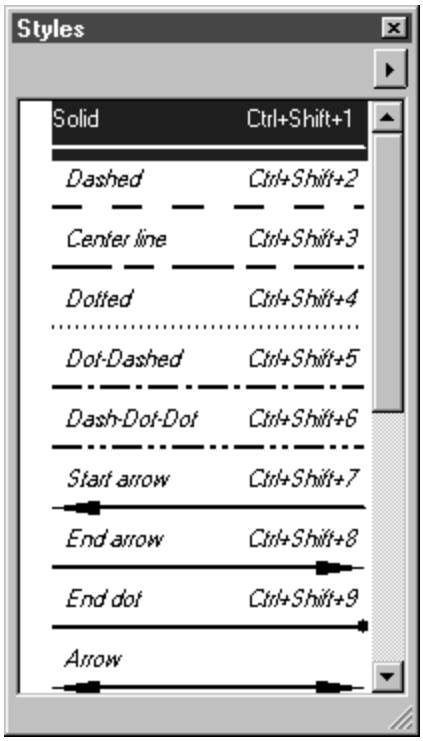

If elements are selected, a check mark appears in front of the styles used with these elements. This allows you to easily identify the style used for an element. Styles which are not used are shown indented and in italics.

Note

Below the name of the style, the style is displayed graphically. You can deactivate this display using menu command ***Preferences****, so that only the name is displayed.*

The current style is indicated by a highlighted background. If you want to use another style, click the name of the style you require. The display changes, and all selected and elements drawn subsequently will be assigned the new style. Elements which were not selected remain unaffected by changing to the new current style.

Double-clicking a style opens the dialog box **Edit style**. This window displays the settings for the current style. You can change the settings or create a new style. The selected style will automatically become the new style. You can also select the dialog box using the **Edit style** command in the pop-up menu. See the next section for style editing instructions.

Editing Styles

Alongside the line thickness and color defined by the pen, the **Style** is a key attribute of a contour. The **Style** determines the external form and the scheme used to display a contour.

Arbortext IsoDraw provides a number of standard styles which cannot be deleted and whose names cannot be changed. Their attributes can be modified, however, in dialog box **Edit style**.

Note

The procedure for making general changes and extensions to the standard preferences for styles is described under *Preferences on page 108*.

Commands for Editing Styles

To edit a style, click the arrow in the top right-hand corner of the window and select one of the two commands from the pop-up menu. When you select a command, a dialog box appears. The dialog boxes for **New style** and **Edit style** are structured in the same way. The only difference is that, for the **New style** window, an entry box appears for the name, whereas for the **Edit style** window, the name of the current style is already entered. The following description applies for both dialog boxes.

The **Edit style** dialog box also appears if you double-click on the name in the style window.

Edit Style

To edit a style, select the command **Edit style**. The **Linestyle** dialog box opens:

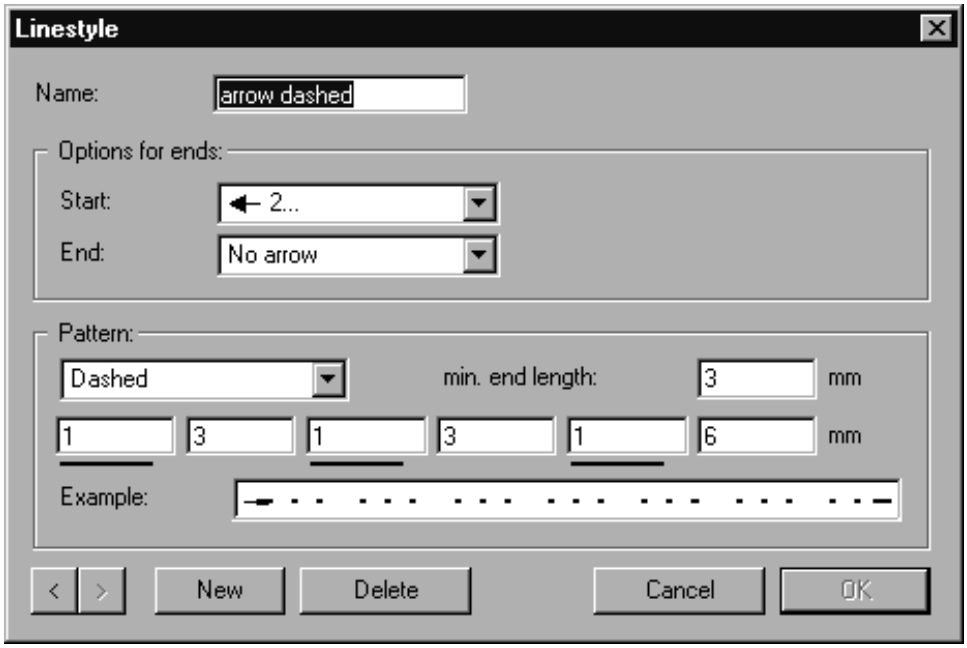

The displayed values refer to the current style. The **Example** field shows you how your style will look. You can page through the list of styles using the two arrow buttons < >.

This dialog box allows you to edit the attributes of all the styles which have been defined for the active illustration. You can also create new styles or delete existing ones.

Your changes will only be valid if you click **OK**. Clicking **Cancel** quits the dialog box without changing the style list.

Note

If you delete a style, the elements or pens using this style will be assigned a substitute style. This change cannot be undone even by canceling the dialog box.

Modifying Style Attributes

Each style must have a unique **Name**. The names of the seven standard styles cannot be overwritten.

The two fields below this are pop-up menus which you can use to select a form for the ends of the lines. As well as the `normal` line end, various arrow and dot shapes are also available for selection.

If you choose the form with arrow, four different widths are available which derive their names from the angle of the arrow tip. Three lengths are provided for the arrow tip, each of these being a multiple of the line thickness. All these options can be used for all three major isometric planes.

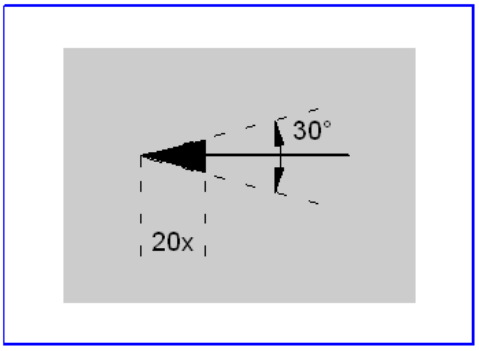

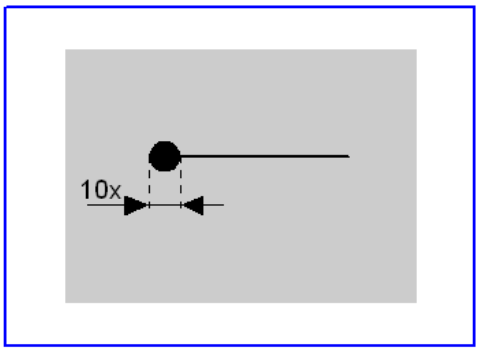

The diameter of the dot is derived from a multiple of the line thickness. The **Start** and **End** lists under **Options for ends** allow you to select dot diameters which are from two to ten times the line thickness.

Note

*The forms for the start and end of lines without arrows or dots is governed by the setting under **Options** in the pop-up menu of the **Styles** window.*

The next step is to define the **Pattern** for the style. There are three types of patterns: `Solid`, `Dashed`, and `Dotted`. You choose the type from the list under **Pattern**.

If you select `Dashed` or `Dotted`, additional entry fields appear.

If you select `Dashed`, you can enter up to six values for the pattern. The value of the first field determines the length of the first line segment. The second field defines the length of the first gap. The remaining fields then specify additional lengths and gaps alternately.

Note

These values must always be entered in pairs, e.g. `5` in the first field and `5` in the second or `20` in the first field, `5` in the second, `4` in the third and `5` in the fourth.

Finally, you also need to enter a minimum end length for the line. This signifies that there must be a line segment of at least this end length at both ends of the line even if this changes the pattern.

If you choose `Dotted` from the list, different fields will appear:

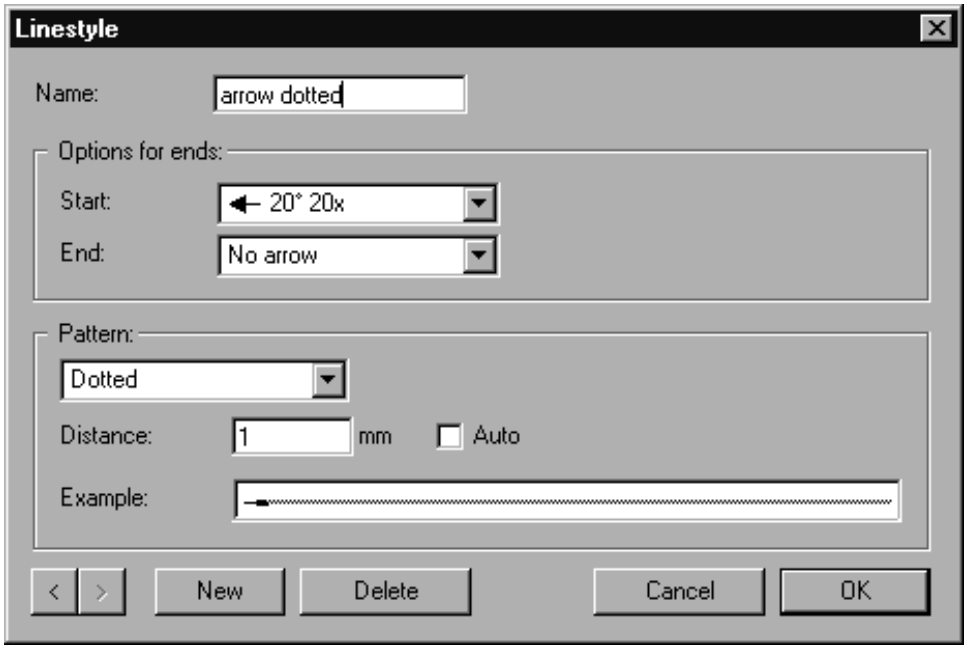

The diameter of the dots is governed by the line thickness of the pen selected for the drawing. If the **Auto** box is checked, the dot spacing is set to twice the line thickness. If this box is not checked, you can enter a fixed value instead.

Note

The dotted pattern of the lines is only visible in preview mode above a specific enlargement factor, dotted patterns below this factor are merely intimated.

Creating a New Style

You can create a new style by clicking the **New** button. This style will initially have the attributes of the last style displayed. Assign the text format a unique name. If a style with that name already exists, the following warning window appears:

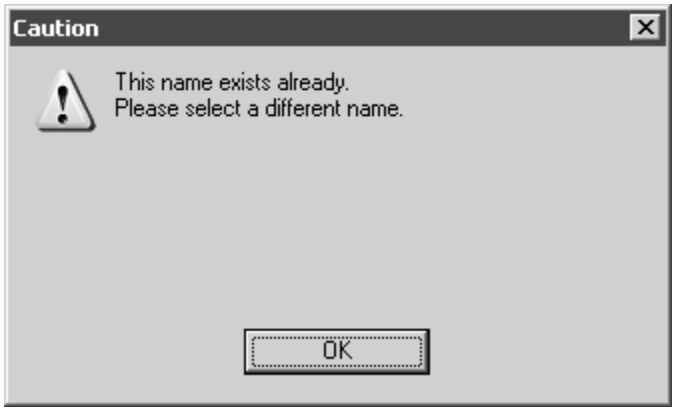

Confirm with **OK** and change the name. You can now change the settings as required.

If you have clicked **New** by mistake or want to abort the creation process, you can delete the style as described below.

You can also create a new style by selecting the **New style** command from the pop-up menu.

Deleting a Style

You can delete the style currently displayed by clicking the **Delete** button.

Note

Standard styles cannot be deleted.

The style will be deleted immediately if it is not being used in the illustration or by a pen. Otherwise, a substitute style must first be defined for assigning to the affected elements:

The new style must be assigned directly in order to avoid conflicts. This assignment cannot be undone. Consequently, the program will ask you for final confirmation if you click **OK**:

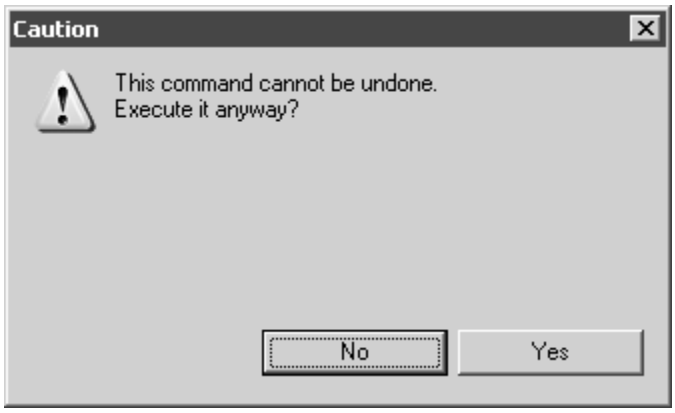

Click **No** if you do not want to make the changes. Click **Yes** to assign the new style with immediate effect. While you can still cancel the **Edit style** dialog box afterwards, the assignments will be retained.

Selecting Styles

You can select a style by clicking the name of a style in the **Styles** window. The current style is then indicated by a highlighted background.

Your selection has two effects:

- It changes selected elements
- It changes the selected style into the current style

This allows you to change existing elements. Select the elements you want to assign a different style to. Then select the required style.

The current style, on the other hand, functions as a preference for those elements you still have to draw.

Note

*The **Element info** menu command tells you which styles are assigned to an element.*

Halos Window

The **Halos** window is one of the eight windows which you can select in the attribute window.

The **Halos** window shows all the halos which are available for the current file plus the **No halo** command.

You can also tear off the window, move it anywhere in the working area and change its size. Clicking the **Close** button closes the **Halos** window.

Clicking on the arrow in the top right-hand corner opens a pop-up menu containing further commands for editing halos.

If elements are selected, a check mark appears to the left of the halos used with these elements. This allows you to easily identify the halo used for an element. halos which are not used are shown indented and in italics.

The current halo is indicated by a highlighted background. If you wish to use another halo, you can do this by clicking the name of the halo you require. The display changes, and all selected and elements drawn subsequently will be assigned the new halo. Elements which were not selected remain unaffected by changing to the new current halo.

Double-clicking a halo opens the **Edit halo** dialog box. This window contains the settings for the current halo. You can change the settings or create a new halo. The selected halo automatically becomes the current halo. You can also select the dialog box using the **Edit halo** command in the pop-up menu. See the next section for halo editing instructions.

Editing Halos

Halos are employed first and foremost when lines or entire elements need to be isolated from underlying areas. A halo is an additional, thicker contour which lies below the element contour specified by the pen.

Arbortext IsoDraw provides 4 standard halos which cannot be deleted and whose names cannot be changed. Their attributes can be modified, however, in dialog box **Edit halo**.

Note

The procedure for making general changes and extensions to the standard preferences for halos is described under *Preferences on page 108*.

Halos are only displayed in preview mode (menu command ***Preview****).*

Commands for Editing Halos

To edit a halo, click the arrow in the top right-hand corner of the window and select one of the two commands from the pop-up menu. When you select a command, a dialog box appears. The dialog boxes for **New halo** and **Edit halo** are structured in the same way. The only difference is that, for the **New halo** window, an entry box appears for the name, whereas for the **Edit halo** window, the name of the current halo is already entered. The following description applies for both dialog boxes.

The **Edit halo** dialog box also appears if you double-click on the name in the **Halos** window.

Edit Halo

To edit a halo, select the command **Edit halo**. The following dialog box opens:

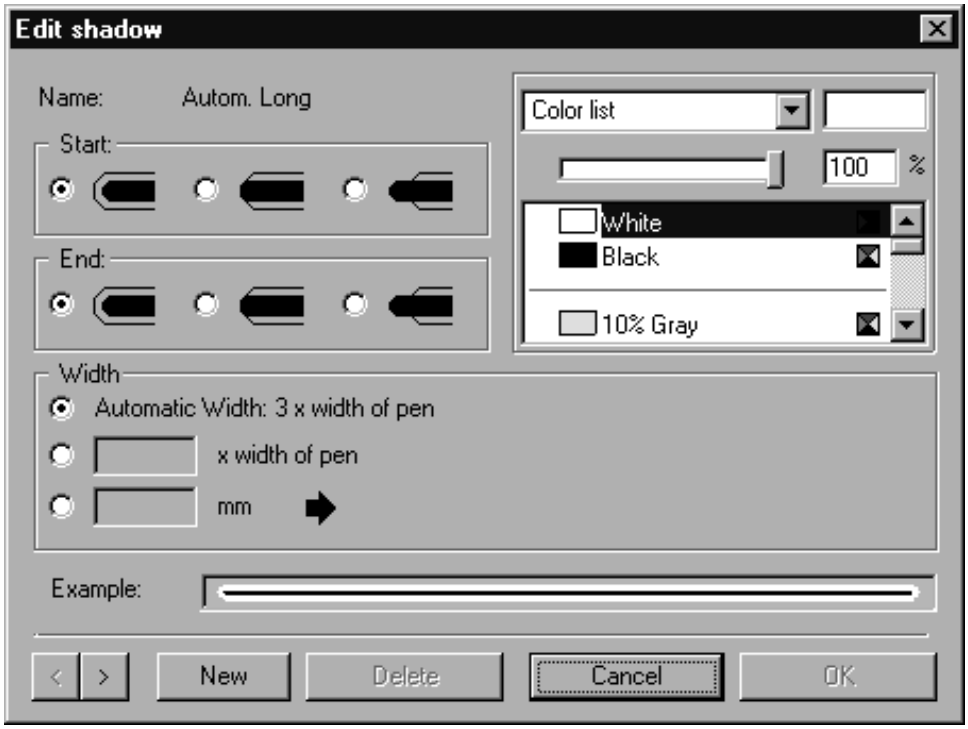

The displayed values refer to the current halo. The **Example** field shows you how your halo will look. You can page through the list of halos using the two arrow buttons  .

This dialog box allows you to edit the attributes of all the halos which have been defined for the active illustration. You can also create new halos or delete existing ones.

Your changes will only be valid if you click **OK**. Clicking **Cancel** quits the dialog box without changing the halo list.

Note

If you delete a halo, the elements or pens using this halo will be assigned a substitute halo. This change cannot be undone even by canceling the dialog box.

Modifying Halo Attributes

Each halo must have a unique **Name**. The names of the standard halos cannot be overwritten.

The options in the **Start** and **End** fields allow you to define how the halo is to flow around the ends of the line. As a rule, the long halo option is selected so that the line is fully isolated.

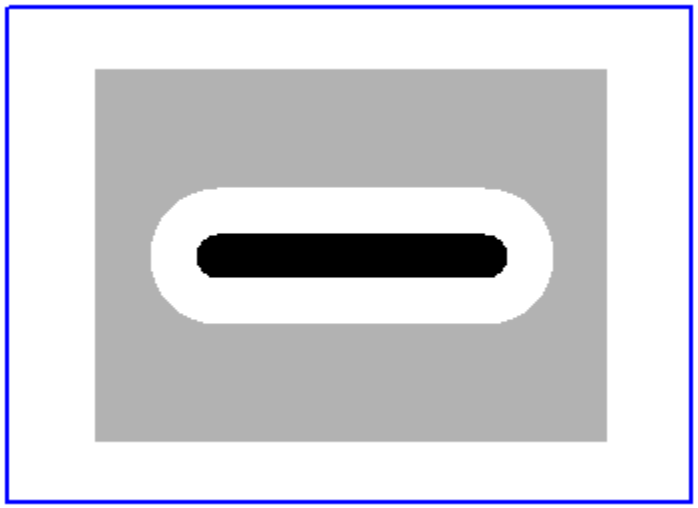

Where lines are touching, the halos may overlap. The shorter versions are intended for just such situations.

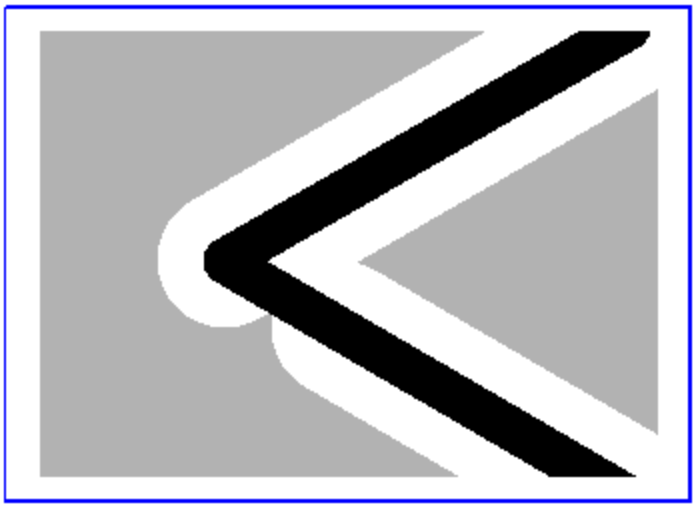

The thickness of the halo generally depends on the line thickness of the pen used. This is important since it ensures that the halo also becomes thicker when the line thicknesses change. Arbortext IsoDraw is therefore provided with two settings which achieve this effect. The **Automatic width** applies a factor which is specified in the preferences (menu command **Edit ▸ Preferences**). The second option allows you to enter a factor for this one halo only. Finally, you can enter a fixed width for the halo as either a multiple of the pen width (**x width of pen**) or a number of millimeters (**mm)**.

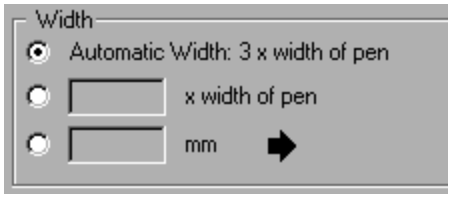

Note

halos are only used in combination with pens, i.e. an element without a contour is displayed without a halo.

The color of the halo is defined in the **Color** selection area. Here, you have the option of selecting one of the defined colors from the list or mixing your own CMYK color. Using the `Color List` and setting a `free CMYK color` are described in Show Fill Window on page 408.

Creating a New Halo

You can create a new halo by clicking the **New** button. This halo will initially have the attributes of the last halo displayed. Assign the halo a unique name and change the settings as you wish. If a halo with that name already exists, the following warning window appears:

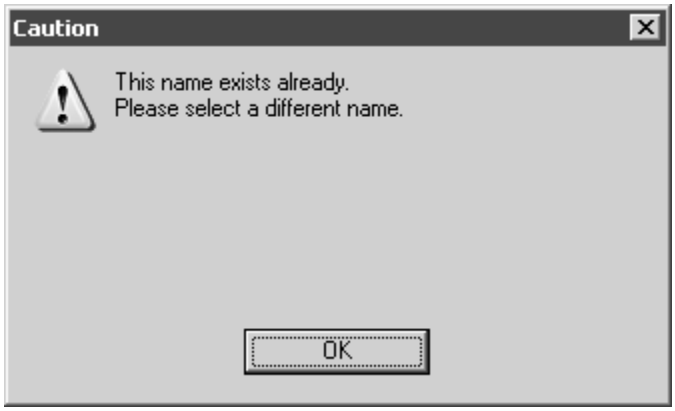

Confirm with **OK** and change the name. You can now change the settings as required.

If you have clicked **New** by mistake or want to abort the creation process, you can delete the halo as described below.

You can also create a new halo by clicking the command **New halo** from the pop-up menu.

Deleting a Halo

You can delete the halo currently displayed by clicking the **Delete** button.

Note

Standard halos cannot be deleted.

The halo will be deleted immediately if it is not being used in the illustration or by a pen. Otherwise, a substitute halo must first be defined for assigning to the affected elements:

The new halo must be assigned directly in order to avoid conflicts. This assignment cannot be undone. Consequently, the program will ask you for final confirmation if you click **OK**:

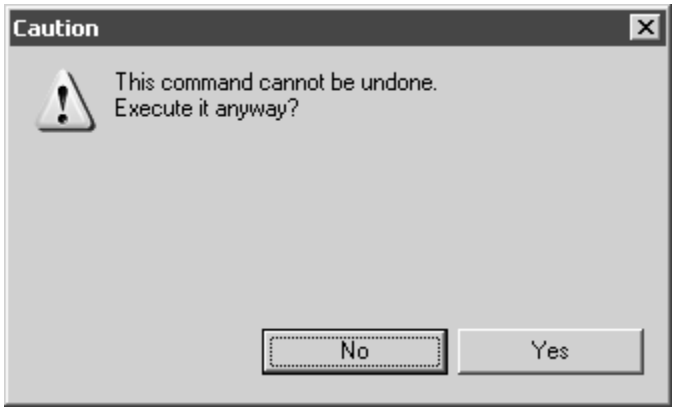

Click **No** if you do not want to make the changes. Click **Yes** to assign the new halo with immediate effect. While you can still cancel the **Edit halo** dialog box afterwards, the assignments will be retained.

Selecting Halos

You can select a halo by clicking the name of a halo in the **Halos** window. In the **Halos** window, the current halo is indicated by a highlighted background.

Your selection has two effects:

- it changes selected elements
- it changes the selected halo into the current halo

This allows you to change existing elements. Select the elements you want to assign a different halo to. Then select the required halo.

The current halo, on the other hand, functions as a preference for those elements you still have to draw.

Grids Window

The **Grids** window is one of the eight windows which you can select in the attribute window.

The **Grids** window shows the background grids available for the current file. You can also tear off the window, move it anywhere in the working area and change its size. Clicking the **Close** button closes the **Grids** window. Clicking on the arrow in the top right-hand corner opens a pop-up menu containing further commands for editing grids. The two standard grids, `Isometric` and `Plane view`—and all the grids you have defined yourself—are displayed in the **Grids** window. The current grid is indicated by a highlighted background. If you have selected the check box **Show grid** in the preferences (see Preferences on page 108), the current grid is shown in the background of the drawing area. If you wish to use another grid, you can do this by clicking the name of the grid you require. The display changes and all the elements which are drawn afterwards are aligned to the new grid. Existing elements are not affected by changing grids.

Double-clicking on the name of a grid opens the **Edit grid** dialog box. This window contains the settings for the current grid. You can either change the settings or create a new grid. In doing this, the grid you have selected also becomes the current grid. You can also select the dialog box using the **Edit grid** command in the pop-up menu. Grid editing instructions are provided in the next section.

Editing Grids

Each parallel perspective grid is defined by three major axes: the X, Y and Z axes. The Y axis is always vertical and therefore does not have to be displayed. It is predefined for all grids. The orientation of the X and Y axes can, however, be changed.

To do this, you only have to define at what angle to the horizontal these axes are to be positioned in the grid. These angles are marked as a and b in the diagram.

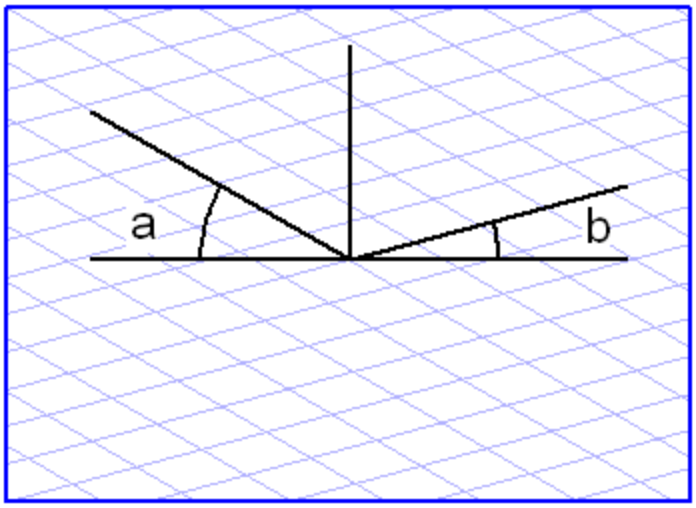

These grid settings are identified by a name which is displayed in the list of the **Grids** window. Once this is done, you can use the grid. Arbortext IsoDraw automatically calculates the correct ellipse value and orientation angle for this grid. In addition, while drawing is in progress, dimensions are displayed with the correct perspective foreshortening along the major axes.

Commands for Editing Grids

To edit a grid, click on the arrow in the right-hand corner of the window and select one of the two commands from the pop-up menu. When you select a command, a dialog box appears. The dialog boxes for **New grid** and **Edit grid** are structured in the same way. The only difference is that, for the **New grid** window, an entry box appears for the name, whereas for the **Edit grid** window, the name of the current grid is already entered.

The **Edit grid** dialog box also appears if you double-click on the name in the **Grids** window.

Edit Grid

To edit a grid, select the command **Edit grid**. The following dialog box opens:

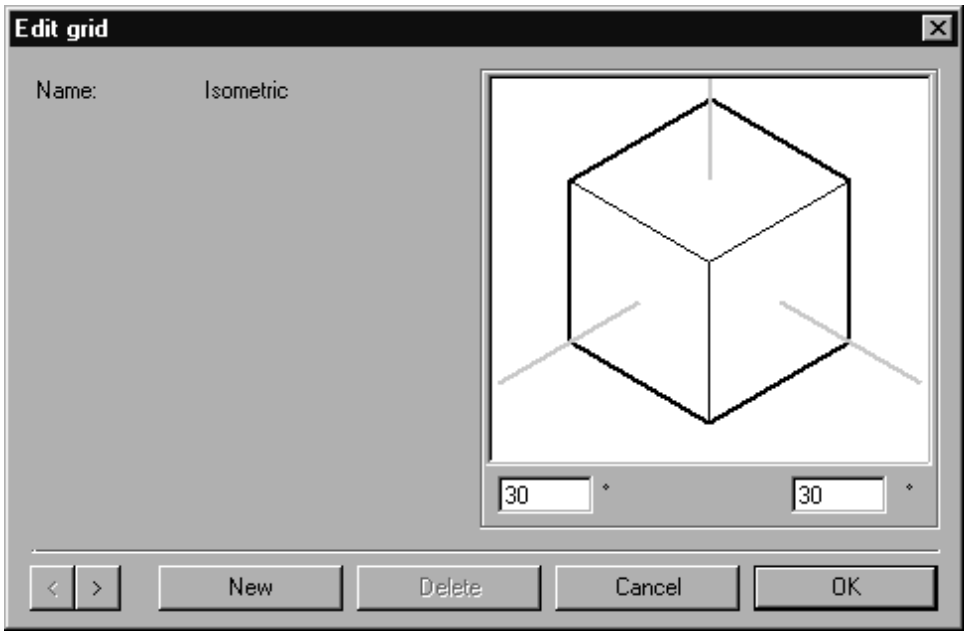

The current values of the grid are displayed in this window. It is possible to change these values, to add new grids and also to delete existing grids.

Name

Each grid must have an unambiguous name. It is not possible to change the names of the `Isometric` and `Plane view` standard grids.

Angle

Enter the angles you require for the major axes. Use the cube to check whether the result is correct.

Paging

Clicking one of the two arrow buttons < > allows you to page through the list of available grids.

New

Selecting **New** creates a new grid. As default values, the new grid receives the angles of the last grid to be displayed and a name which is made up from the rounded angle values (e.g. 30 – 30). You may of course change these preferences. If a grid with that name already exists, the following warning window appears:

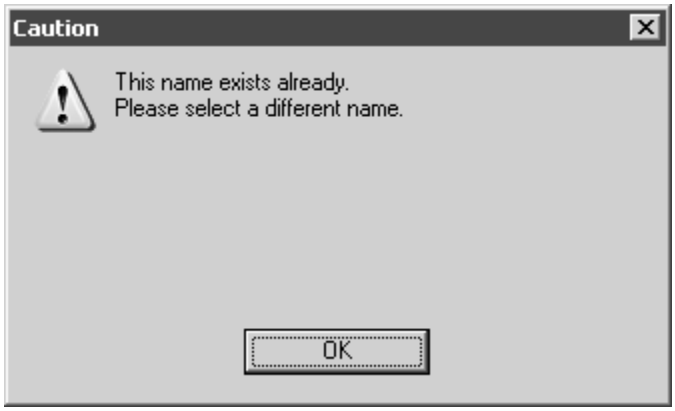

Confirm with **OK** and change the name. You can now change the settings as required.

Delete

Clicking **Delete** removes a grid. Deleting a grid cannot be undone. Consequently, the program will ask you for confirmation:

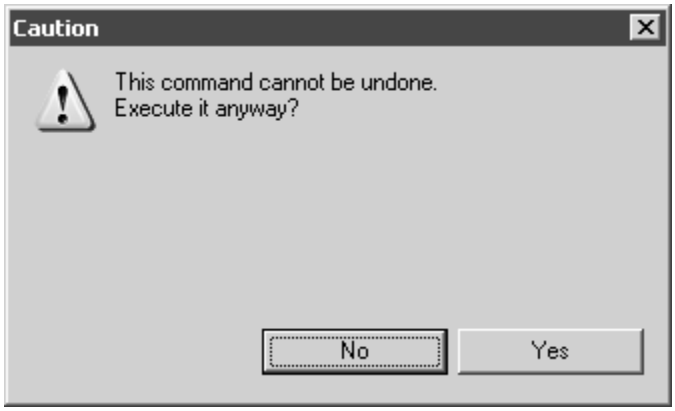

Click **Cancel** if you do not want to make the changes. Click **OK** to delete the grid with immediate effect. The standard grids `Isometric` and `Plane view` cannot be deleted.

Quitting the Dialog Box

As long as the dialog box is displayed, all changes made to existing grids including the new creation or deletion of grids are not yet saved. These changes only take effect after you have quit the dialog box by clicking **OK**. Clicking **Cancel** undoes all the changes you have made.

New Grid

This command allows you to create a **New grid** for the current file. If you select this command, the following dialog box will appear:

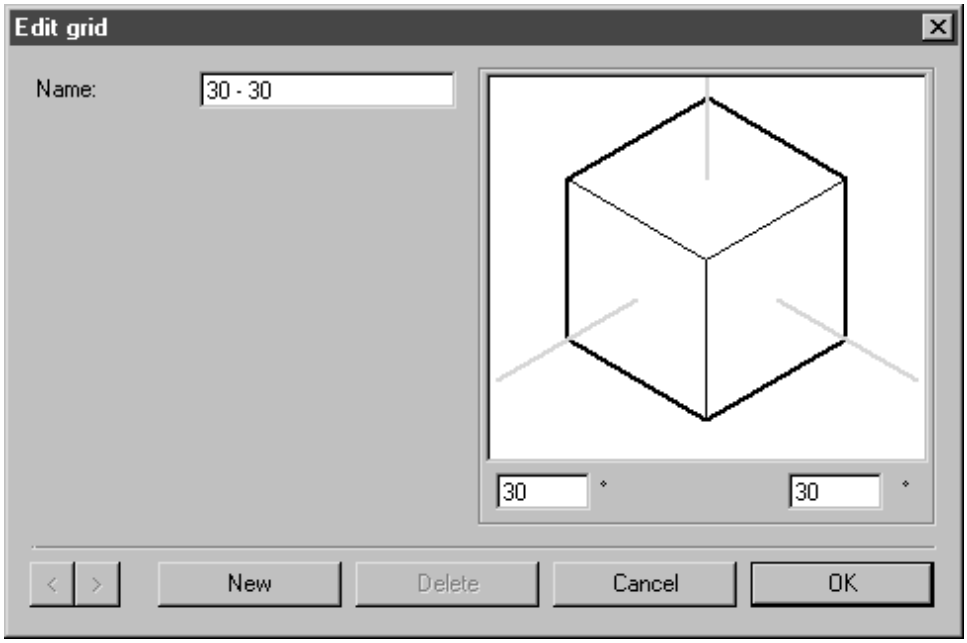

Name

The suggested **Name** is composed from the angles of the two major axes. It is possible to change this name.

Angle

The angles of the current grid are specified as default values here. Enter the angles you require for the major axes and use the cube to check whether the result is correct.

New

Clicking **New** allows you to create further grids.

Quitting the Dialog Box

Click **OK** to confirm newly created grids, click **Cancel** to quit the dialog box without creating new grids.

You can also create a new grid by drawing two lines. These lines define the two major axes of the new grid, the X and Y axes.

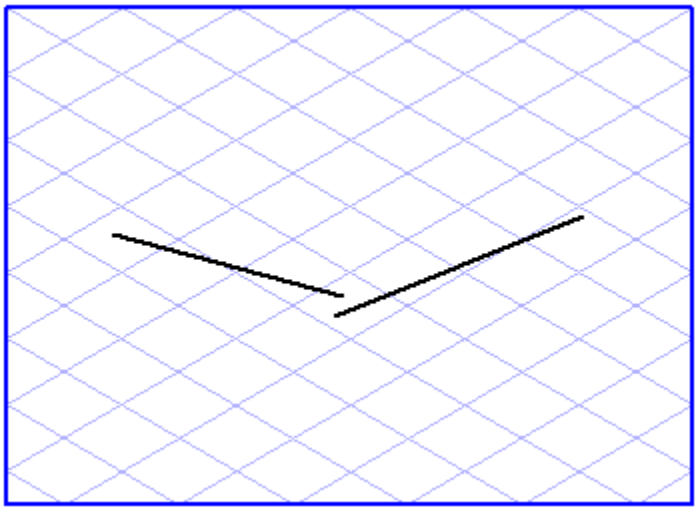

Select the two lines and then call up the **New grid** command. The familiar dialog box appears:

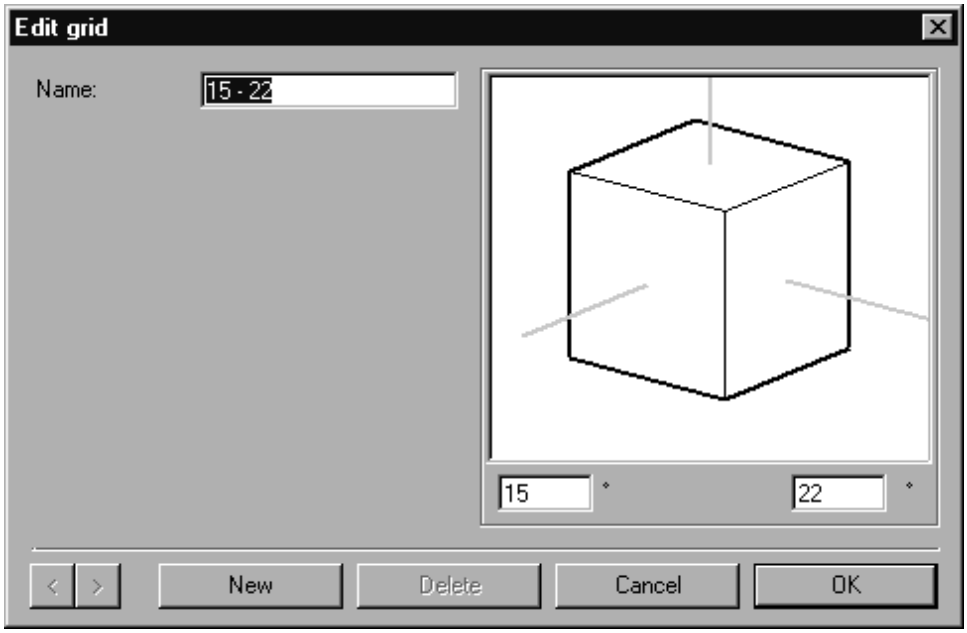

Arbortext IsoDraw automatically calculates the angles of the two major axes. The name it suggests for the new grid is made up of rounded values of these two angles.

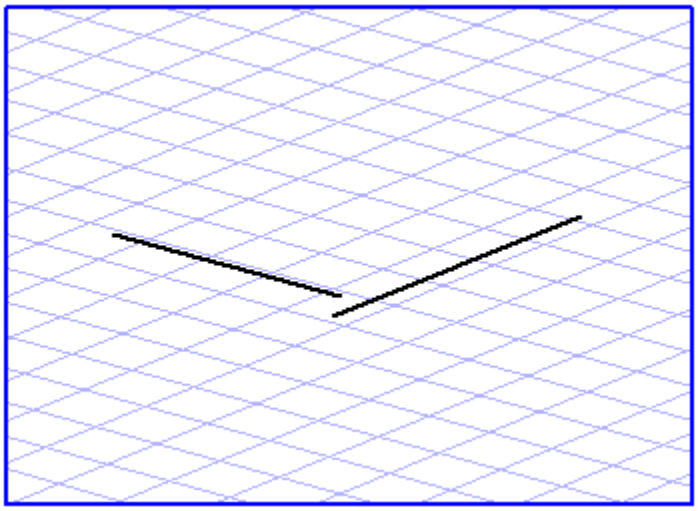

Clicking **OK** creates the new grid which then appears in the list in the **Grids** window. Clicking its name makes it become the active grid.

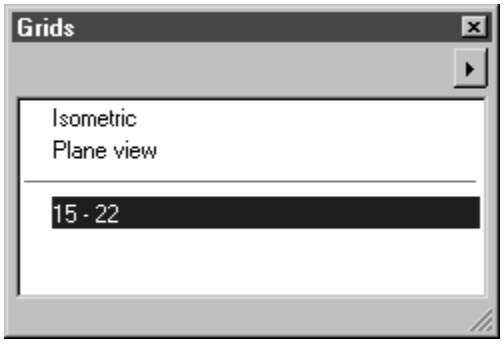

Note

This method provides you with a quick and convenient way of creating new perspective grids when tracing scanned drawings, for example. Drag two lines in the direction of the relevant major axes, select them and create a new grid.

Formats Window for Text

The **Formats** window is one of the eight windows which you can select in the attribute window.

The **Formats** window shows the text formats available for the current file.

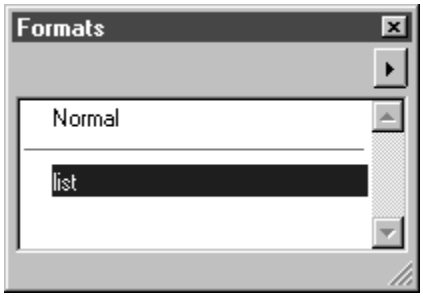

You can also tear off the window, move it anywhere in the working area and change its size. Clicking the **Close** button closes the **Formats** window.

Clicking on the arrow in the top right-hand corner opens a pop-up menu containing further commands for editing text formats.

The **Formats** window shows the standard text format `Normal` and any text formats you have defined yourself. The current text format is indicated by a highlighted background. If you wish to use another format, you can do this by clicking the name of the format you require. The text display changes and all text elements which are entered afterwards appear in the new text format.

Double-clicking on the name of a format opens the **Edit format** dialog box. This window contains the settings for the current format. You can change these settings or create a new text format. The selected format automatically becomes the current format. You can also select the dialog box using the **Edit format** command in the pop-up menu. See the next section for text format editing instructions.

Editing Text Formats

Texts such as lettering, tables, and numbering in Arbortext IsoDraw are generated as text elements. A text element can consist of a single character, a number or quantities of text. This text can be changed in various ways by commands in the **Text** menu. A text format contains the key attributes that can be set in the **Text** menu. These include the font, font size, font face and tabs.

It is useful in many instances to use fixed text formats. Where new text is entered, the attributes of the active text format are applied to this text. A text format is applied for at least one paragraph between two paragraph signs. If a text element is selected using the arrow cursor, the format is applied to the entire text element. The commands in the **Text** menu can be used to change texts which have been assigned formats. If you wish to subsequently change the text format, these changes will be retained.

Note

The procedure for making general changes and extensions to the standard preferences for text formats is described in *Preferences on page 108*.

Commands for Editing Formats

To edit a format, click the arrow in the top right-hand corner of the window and select one of the two commands from the pop-up menu. When you select a command, a dialog box appears. The dialog boxes for **New format** and **Edit format** are structured in the same way. The only difference is that, for the **New format** window, an entry box appears for the name, whereas for the **Edit format** window, the name of the current format is already entered. The following description applies for both dialog boxes.

The **Edit format** dialog box also appears if you double-click on the name in the **Formats** window.

Edit Format

To edit a format, select the command **Edit format**. The following dialog box opens:

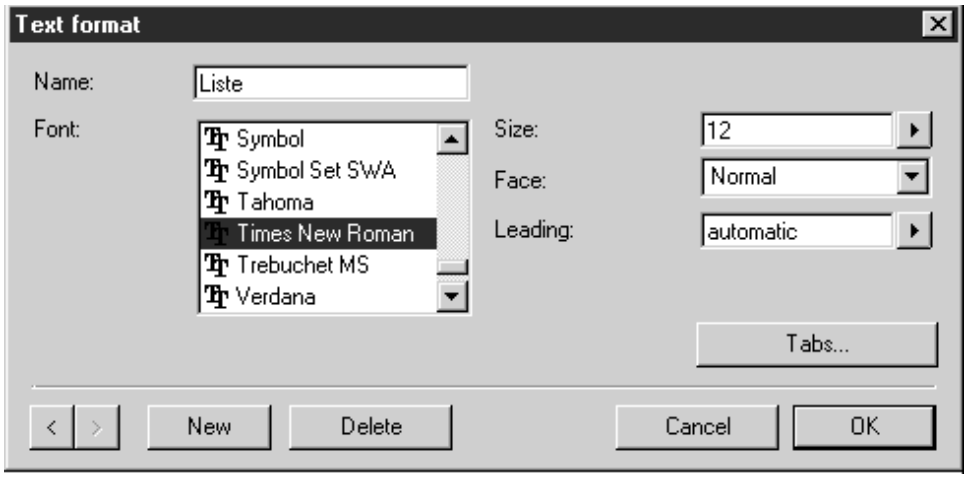

The displayed values refer to the current format. You can page through the list of text formats, however, using the two arrow buttons 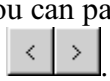 .

This dialog box allows you to edit the attributes of all the formats which have been defined for the active file. You can also create new formats or delete existing ones.

Your changes will only be valid if you click **OK**. Clicking **Cancel** quits the dialog box without changing the text format list.

Note

If you delete a format, the text elements using this format will be assigned a substitute format. This change cannot be undone even by canceling the dialog box.

Modifying Format Attributes

Name

Each text format must have an unambiguous name. The name of the standard format `Normal` cannot be changed.

Font

Enter the required font here. All the available fonts will be displayed.

Size, Face, Leading

You can select the required value for each attribute from the pop-up menu.

Tabs

If you click the **Tabs** button, the following dialog box appears:

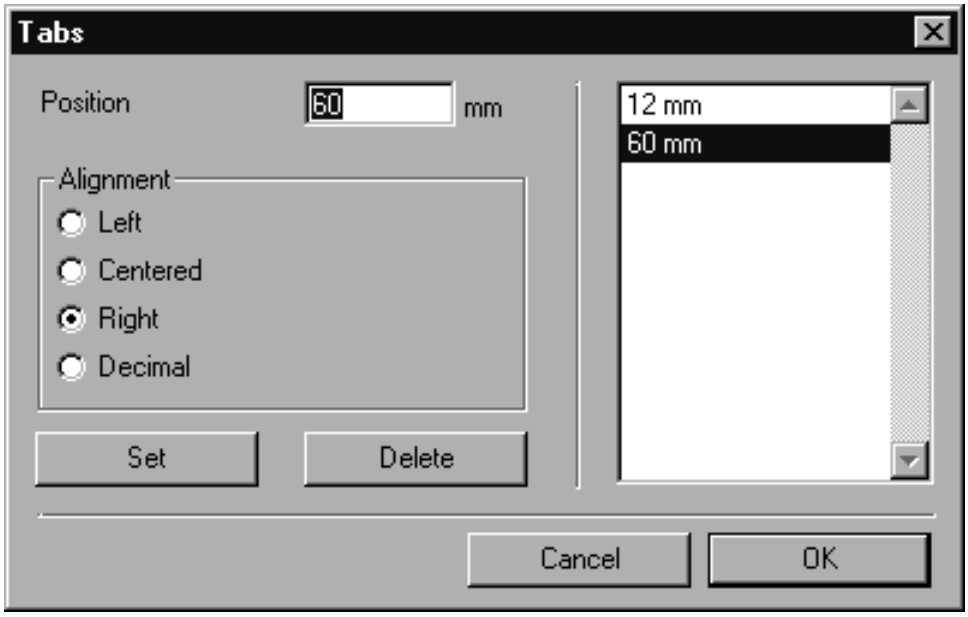

In **Position**, enter the location where the tab stop is to be positioned, and select the type of tab in **Alignment**. If you click **Set**, the tab is confirmed and the position appears in the box on the right. **Delete** deletes the last selected tab.

Clicking on **Cancel** exits the dialog box. Your entries or modifications are ignored. Confirming with **OK** applies the set tabs to the text format.

Note

A full description of font attributes and tabs can be found in the sections on the ***Text*** *menu.*

Creating a New Text Format

Click the **New** button to create a new text format. This format initially adopts the attributes of the last format displayed. Assign the text format a unique name. If a text format with that name already exists, the following warning window appears:

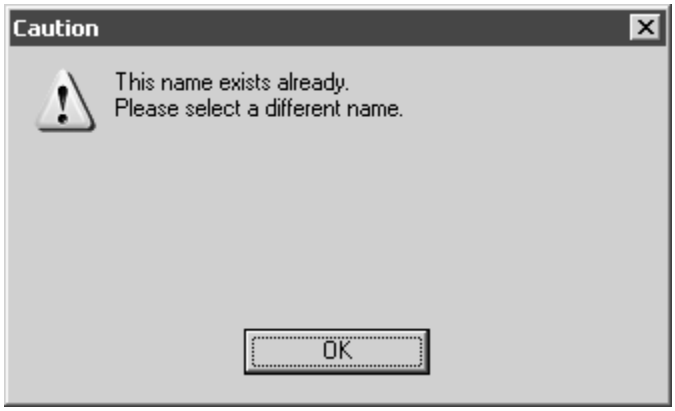

Confirm with **OK** and change the name. You can now change the settings as required.

If you have clicked **New** by mistake or want to abort the creation process, you can delete the text format as described below.

You can also create a new format by selecting the **New format** command from the pop-up menu.

Deleting a Text Format

You can delete the format currently displayed by clicking the **Delete** button.

Note

The standard format `Normal` *cannot be deleted.*

The text format will be deleted immediately if it is not being used for text elements. Otherwise, a substitute format must first be defined for assigning to the affected text elements:

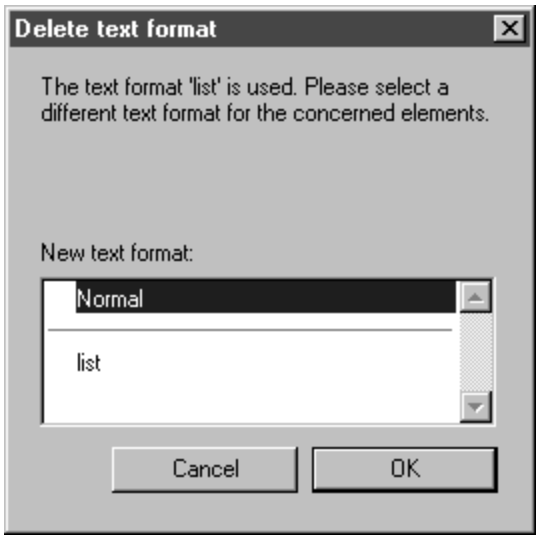

The new format must be assigned immediately to prevent conflicts. This assignment cannot be undone. Consequently, the program will ask you for final confirmation if you click **OK**:

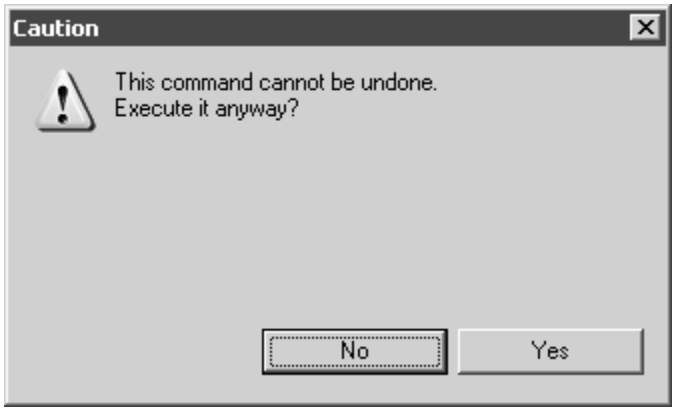

Click **No** if you do not want to make the changes. Click **Yes** to assign the new format with immediate effect. While you can still cancel the **Text format** dialog box afterwards, the assignment of the new format will be retained.

Note

Font attributes that have been used subsequently on text elements that used the deleted text format are retained. If you have subsequently put a word in italics, for example, the substitute format will not affect this.

Selecting Formats

You can select a format by clicking on the name of a format in the **Formats** window. The current format is indicated by a highlighted background.

Your selection has two effects:

- it changes selected text elements
- it changes the selected format to the current format.

This allows you to change existing text elements. Use the arrow cursor or the text tool to select the text elements to which you want to assign a different text format. Then select the required text format.

The **current** format, on the other hand, functions as a preference for those text elements you still have to write.

Viewports Window

The **Viewports** window is one of the eight windows which you can select in the attribute window.

The **Viewports** window shows the viewports available for the current file.

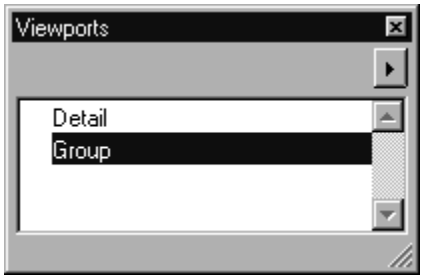

You can also tear off the window, move it anywhere in the working area and change its size. Clicking the **Close** button closes the **Viewports** window. Clicking on the arrow in the top right-hand corner opens a pop-up menu containing further commands for editing viewports.

The current viewport is indicated by a highlighted background.

Double clicking on the name of a viewport opens up the **Edit viewport** dialog box. This window displays the attributes for the current viewport. You can change all the attributes. You can also select the dialog box using the **Edit viewport** command in the pop-up menu. A description of how to do this can be found in the following section.

Editing Viewports

A file opened in Arbortext IsoDraw will be displayed in a window. In most cases you will only be able to see a section of the illustration, particularly if you enlarge the illustration or move it around in the window.

All the information required to display a particular section of a file in a window is combined into a viewport. You can give a name to a particular viewport in order to be able to restore this status later with ease.

Viewports are particularly useful if you frequently change position on large illustrations. Arbortext IsoDraw lets you create a separate viewport for every important section, allowing you to switch backwards and forwards between these sections with a click of the mouse.

Viewports can also be used for interactive illustrations. Here, viewports are linked with hotspots which allow you to jump from one illustration to another (see the section on the Objects Menu on page 219).

The commands in the pop-up menu allow you to create new viewports and modify or delete existing ones. Every viewport is assigned a name which appears in the **Viewports** window.

Commands for Editing Viewports

To edit a viewport, click on the arrow in the right-hand corner of the window and select a command from the pop-up menu. When you select the **New viewport** or **Edit viewport** command, a dialog box appears. The dialog boxes for **New viewport** and **Edit viewport** are structured in the same way. The only difference is that, for the **New viewport** window, an entry box appears for the name, whereas for the **Edit viewport** window, the name of the current viewport is already entered.

The **Edit viewport** dialog box also appears if you double-click on the name in the **Viewports** window.

New Viewport

First open a file. Move and enlarge the displayed illustration in the window as required. Once you have specified the section you want to define as a viewport, call up the **New viewport** command.

The following dialog box appears:

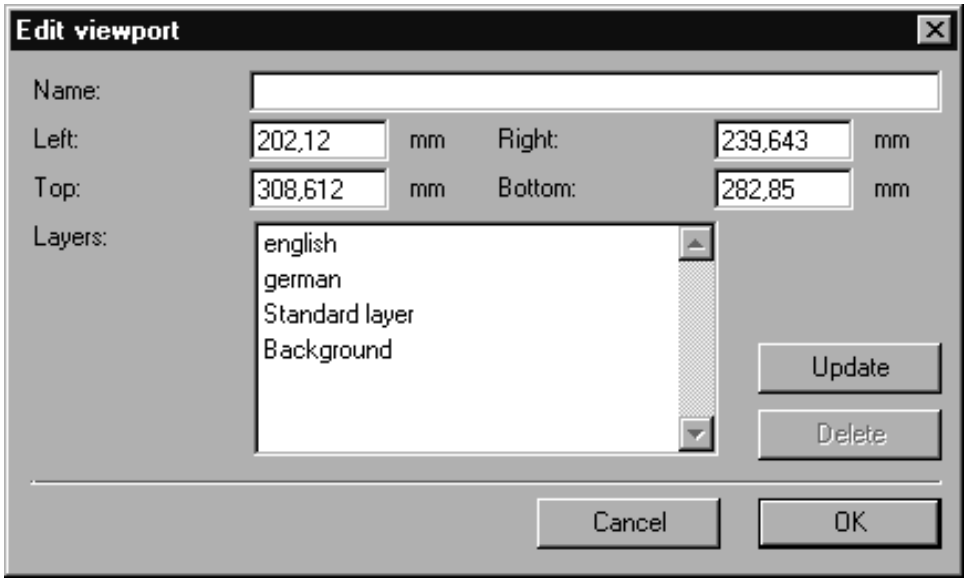

This shows the values of the active file. If the values are as you want, you can generate the viewport straightaway. Enter a unique name for this file in the **Name** box. Then click **OK** to generate the viewport. Clicking **Cancel** closes the dialog box without making any changes.

Note

If you subsequently want to use the illustration in standard environments (e.g. SGML, XML, HTML, CGM), only the characters `a–z`, `A–Z`, `0–9` *and* `$ - _ +` *may be used.*

The other boxes let you check the individual values and adjust them precisely as necessary.

Viewport Position

These values define the viewport on the illustration. The distance is measured between the origin of the drawing sheet and the corners of the **Viewports** window. The definitions of **Left**, **Right**, **Top** and **Bottom** can be seen in the following figure.

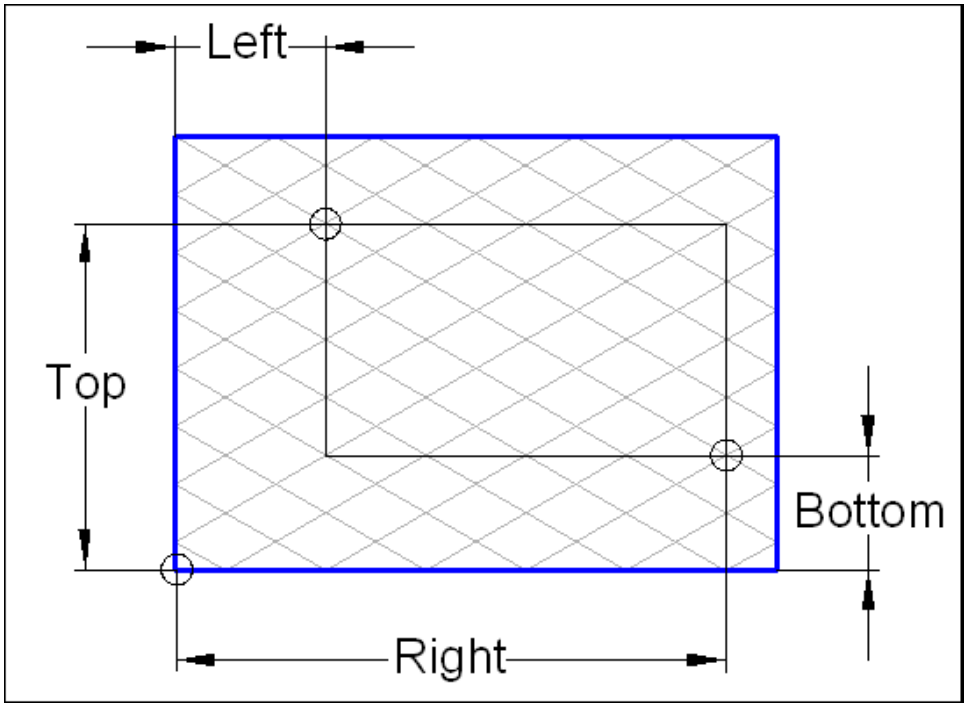

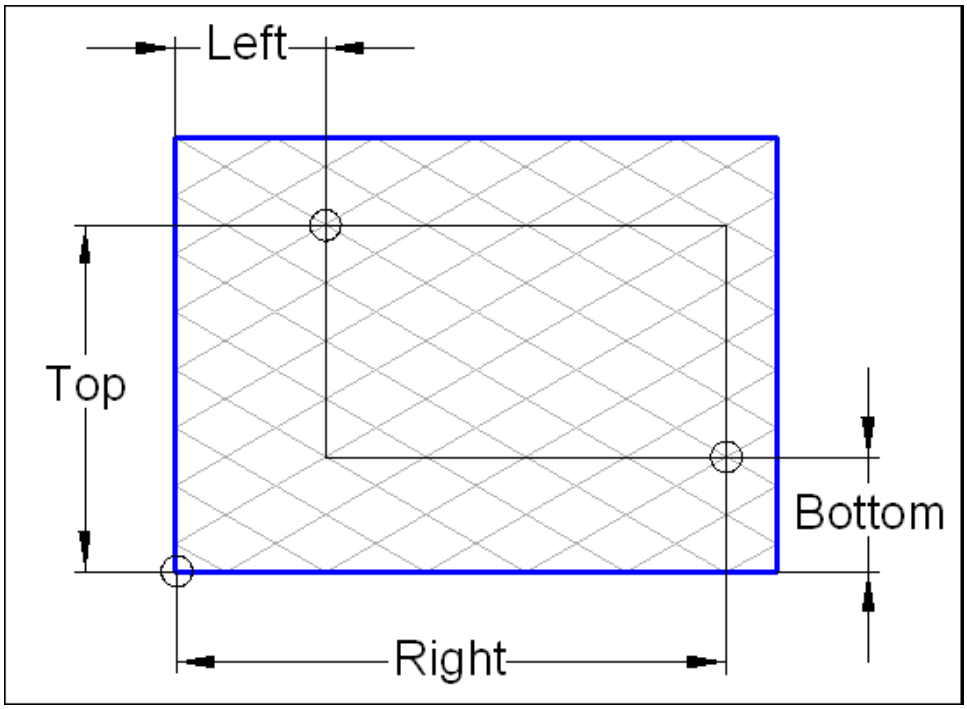

Layers

A viewport also stores the names of the existing layers and their current settings, e. g. the visibility. If the viewport is selected afterwards, the affected layers will be reset to the state in which they were saved. Layers which are added after the viewport has been created are not changed by the viewport. In the **Layers** box is a list of layers in the file that are checked by this viewport.

Delete

If you do not wish a certain layer to be affected by this viewport, select it in the list and click **Delete**. The layer is removed from the list, and therefore from the viewport. The layer is not deleted from the file.

Update

If you have inadvertently deleted the wrong layer, you can restore the complete list by clicking **Update**.

Note

The use of layers with viewports is described with an example in section *Using Layers with Viewports on page 394*.

Edit Viewport

To edit a viewport, select command **Edit viewport**. The following dialog box opens:

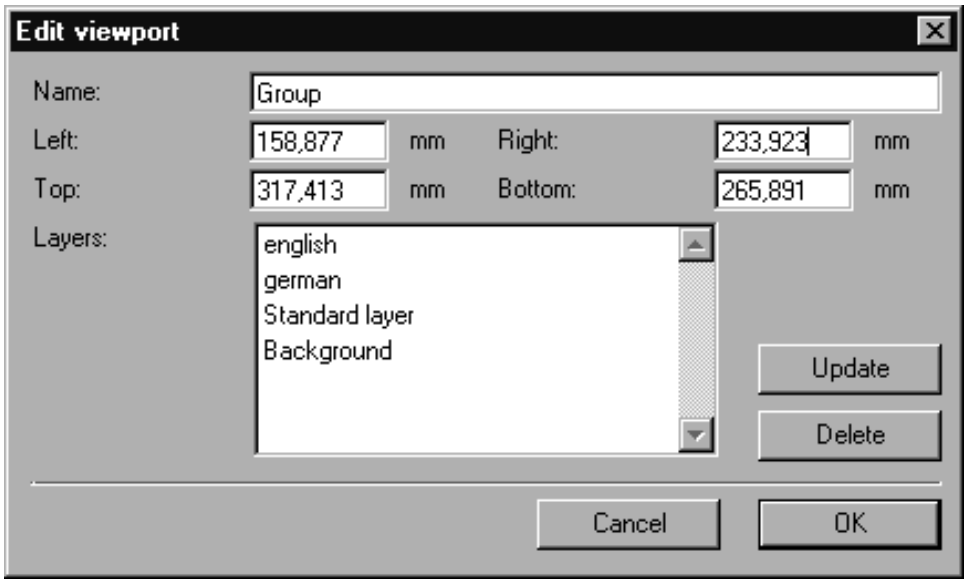

This window displays the attributes for the current viewport. You can change the values for the viewport's extent as well as the choice of layers. Your changes will only be valid if you click **OK**. Clicking **Cancel** quits the dialog box without changing the viewport list.

Viewport Position

In the entry fields next to **Left**, **Right**, **Top** and **Bottom**, you can change the extent and position of the viewport. If you want to see a smaller section of the illustration, i.e. you want to zoom in, the values for **Left** and **Top** become larger while the values for **Right** and **Bottom** become smaller (see also figure in New Viewport on page 390). If you wish to see a larger section, enter smaller values for **Left** and **Top**, and larger ones for **Right** and **Bottom**.

Layers

The list shows the layers that are influenced by the viewport. This list does not necessarily have to agree with the current list of layers in the file or their settings, since you may have added layers or changed layer attributes.

Delete

If you do not wish a certain layer to be affected by this viewport, select it in the list and click **Delete**. The layer is removed from the list, and therefore from the viewport. The layer is not deleted from the file.

Update

If you want to update the list of layers, click this button. All the layers and their current settings will then be adopted from the file.

Using Layers with Viewports

It is often necessary to deactivate individual layers so that only certain information is displayed. An example of this is when several languages are to be used in a file. For each language, a separate layer is created where the text elements in the relevant language are located. You can then toggle between the individual language versions by making each language layer visible and all the others invisible. This can be done very conveniently with the aid of viewports.

Let's assume that your file contains two layers with text elements - a `German` layer for German text and an `English` layer for English text. The illustration itself lies on the standard layer. Imagine you now want to generate two viewports that will enable you to toggle between the two language versions.

In the **Layers** window, set the `English` layer to **invisible** and the `German` layer to **visible**.

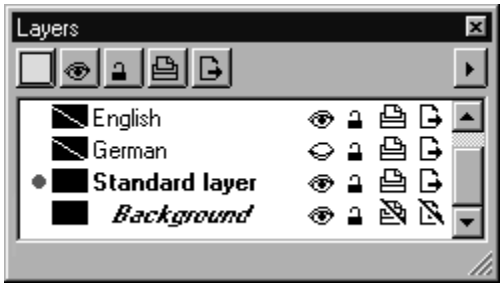

Select command **New viewport**. In the dialog box, enter the name `German` for the new viewport. The list shows all the current layers. Select in sequence the `Standard layer` and the `Background layer`, and delete them from the list. Click **OK**.

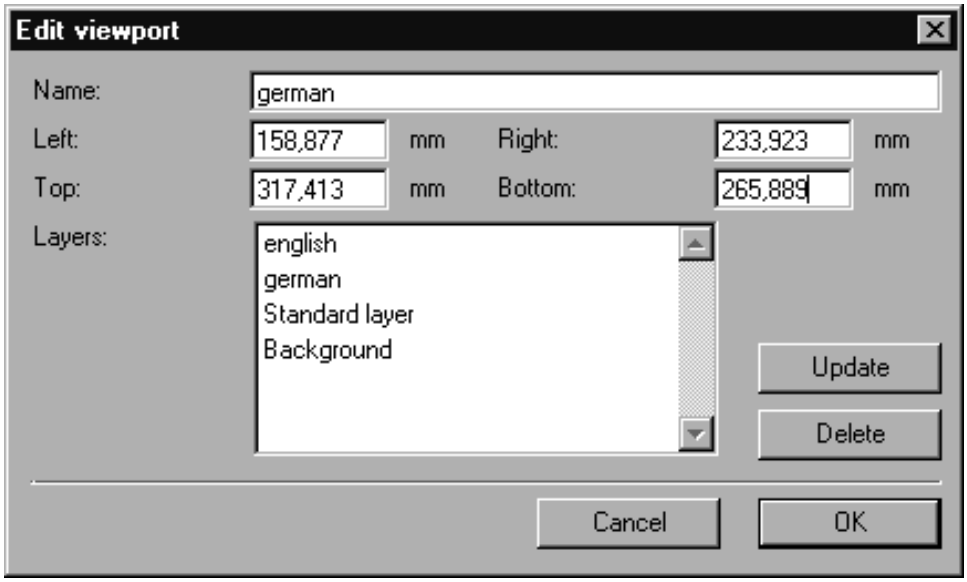

In the **Layers** window, set the `English` layer to **invisible** and the `German` layer to **visible**.

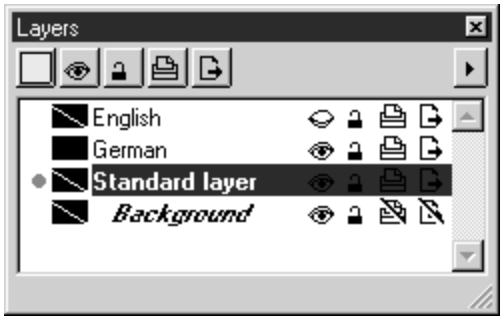

Select command **New viewport**. In the dialog box, enter the name `English` for the new viewport. The list shows all the current layers. Select in sequence the `Standard layer` and the `Background layer`, and delete them from the list. Click **OK**.

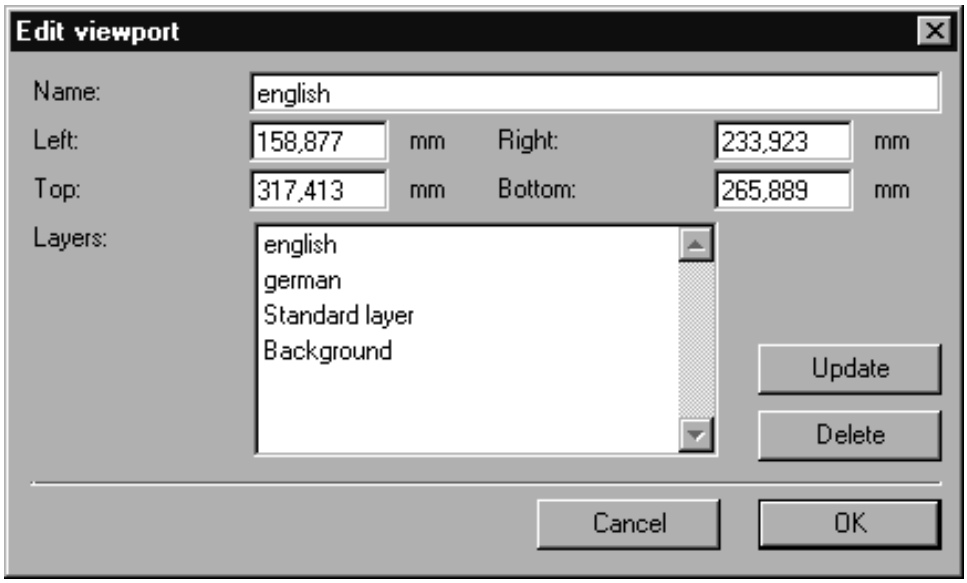

You have now created two viewports that will appear in the attribute window **Viewports**.

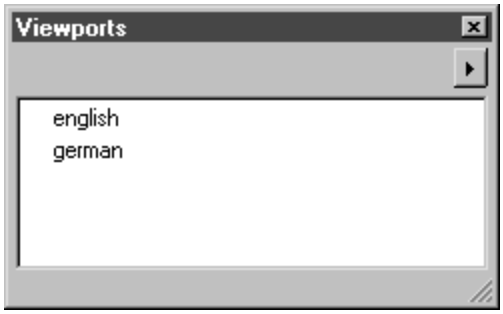

Delete Viewport

Select the viewport you wish to delete and select command **Delete viewport** using the right-hand arrow from the pop-up menu. The selected viewport is deleted. You cannot undo the command.

Viewport for Animations

With any file that contains animations, you can specify a viewport to be automatically used when playing back the animation in Arbortext IsoView. This viewport must be saved under the name `IsoViewExtent`. Arbortext IsoView will only recognize the viewport if it has this name.

The option of selecting a specific viewport for animations is very useful if, for example, only a small section of a drawing is animated. You can specify a viewport that zooms in on this animated section. Even if the drawing needs greater space due to the movement of objects that takes place within the animation, you can specify the appropriate viewport for this.

Callouts Window

The **Callouts** window is one of the eight windows which you can select in the attribute window.

The **Callouts** window shows the callout styles available for the current file.

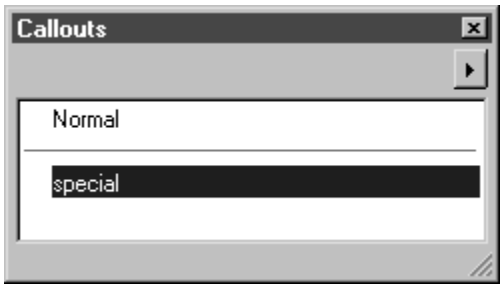

You can also tear off the window, move it anywhere in the working area and change its size. Clicking the **Close** button closes the **Callouts** window.

Clicking on the arrow in the top right-hand corner opens a pop-up menu containing further commands for editing callout styles.

The **Callouts** window shows the standard style `Normal` and any styles you have defined yourself. The current callout style is indicated by a highlighted background. If you want to use another style, click the name of the style you require. All callouts created after that use the new style.

Double-clicking on the name of a callout style opens the **Edit callout style** dialog box. This window displays the settings for the current style. You can change the settings or create a new style. The selected style will automatically become the new style. You can also select the dialog box using the **Edit callout style** command in the pop-up menu. A description of how to do this can be found in the following section.

Editing Callout Styles

Callouts are used primarily for defining element positions. They are created using the callout tool from the toolbox.

Each callout is assigned a style. The style is used to define the attributes for the individual elements of a callout.

The attributes of a style can be changed in the **Edit callout style** dialog box.

Commands for Editing Callout Styles

To edit a style, click on the arrow in the top right-hand corner of the window and select one of the first two commands from the pop-up menu. When you select a command, a dialog box appears. The dialog boxes for **New callout style** and **Edit callout style** are structured in the same way. The only difference is that, for the **New callout style** window, an entry box appears for the name, whereas for the **Edit callout style** window, the name of the current style is already entered. The following description applies for both dialog boxes.

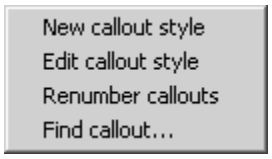

The **Edit callout style** dialog box also appears if you double-click on the name in the **Callouts** window.

Edit Callout Style

To edit a callout style, select the **Edit callout style** command in the pop-up menu. The following dialog box opens:

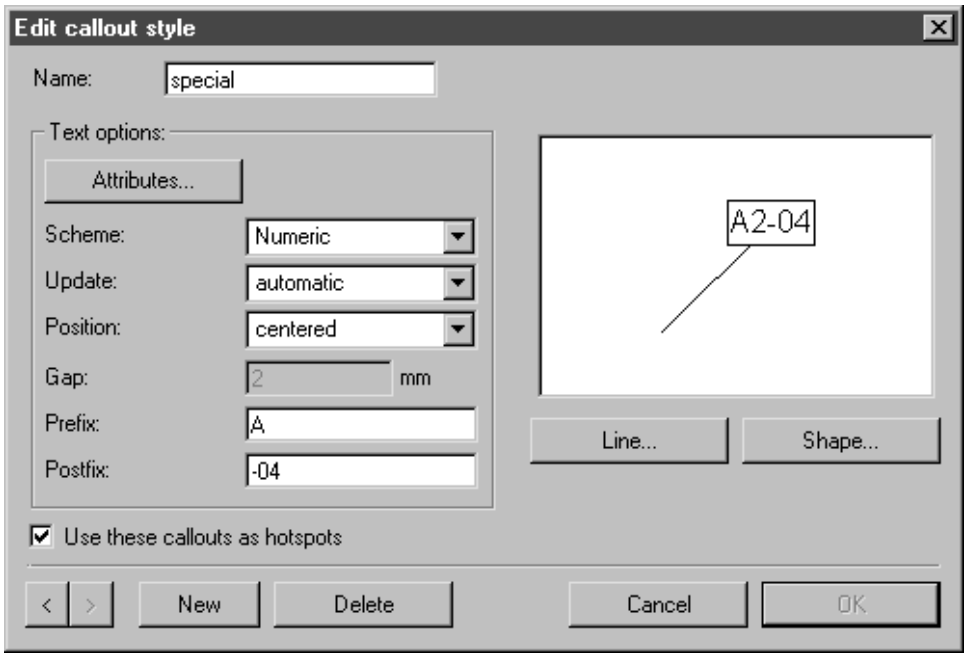

The displayed values refer to the current callout style. You can page through the list of style names, however, using the two arrow buttons 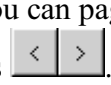 .

A callout element consists of three individual elements:

- Leader line
- Text element—includes the consecutive number or letter and additional text entries
- Frame—around the whole text element

You can edit the attributes of all elements in this dialog box. You can also create new callout styles or delete existing ones.

Your changes will only be valid if you click **OK**. Clicking **Cancel** quits the dialog box without changing the style list. A new style can only be used for newly created callout elements.

Modifying Callout Style Attributes

Name

Each style must have a unique name. The name of the standard style **Normal** cannot be overwritten.

Text Options

You can use these options to change various attributes for the text entry.

Attributes

If you select **attributes**, the following dialog box appears:

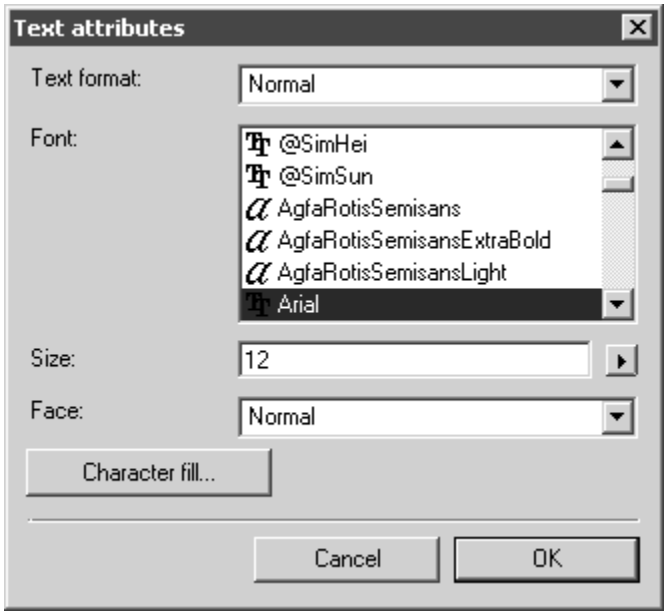

All the available text formats are shown in the pop-up menu under **Text format**. Using the options available here, which will be familiar to you from text elements, you can select the **font**, enter the **font size** and set the **face**. This overwrites the preferences of the selected text format.

Clicking on **Character fill** opens another dialog box.

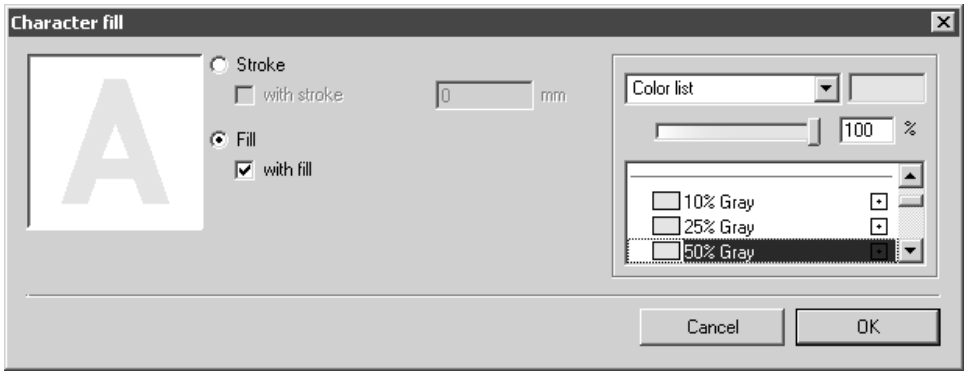

In this dialog box you can change the graphic attributes for the callout text entries. As with normal text, you can fill the black-filled characters with color by selecting **Fill**. If you want to highlight the outline of the characters, you can set the thickness of the outline and its color by selecting **Stroke**. You can find a detailed description of character fill in Character Fill on page 320.

Selecting **Cancel** returns you to the dialog box for the text attributes without performing any changes. Clicking **OK** adopts the settings.

Scheme

Under **Scheme** you can select the type of part number. If you set `No scheme`, only the non-varying entries under **Prefix** and **Postfix** appear in the text entry for the callout. If `Numerical` is set, the callouts are numbered from `1` upwards. If `Alpha, upper case` and `Alpha, lower case` are set, letters are given for the part numbers instead of numbers.

Update

Under **Update** you can define whether the callouts are to be updated or not following the deletion or addition of new callouts. If update is set, all changes to a style are applied to all callouts formatted using this style. If `none` is set, only the newly generated callouts are created with the changed settings.

Position

Under **Position** you have two possible settings. If you set `centered`, the text entry is centered relative to the end of the leader line. With `aligned`, the text entry is at a fixed distance (next to, under or above) the leader line.

Distance

The distance can only be adjusted when `aligned` is selected under **Position**. When adjusting the distance, you are specifying the distance between the leader line and the outer edge of the nearest text entry. This setting only works when no frame is selected under the **Shape options** option. When text entries have a frame, the leader line runs to the edge of the frame.

Prefix, Postfix

With **prefix** and **postfix**, you can also place a non-varying entry in front of or behind the ongoing numbering scheme for the callouts. You can use numbers, letters or other characters for this. For instance, you can use this method to add an assembly name to the callout numbers used for drawings or, using the prefixed word **Viewport**, to assign a designation to various viewports with a callout in the drawing.

Line Options for Callout Leader Line

The settings under **line options** relate to the leader line of the callout element. When you click this button, the following dialog box appears:

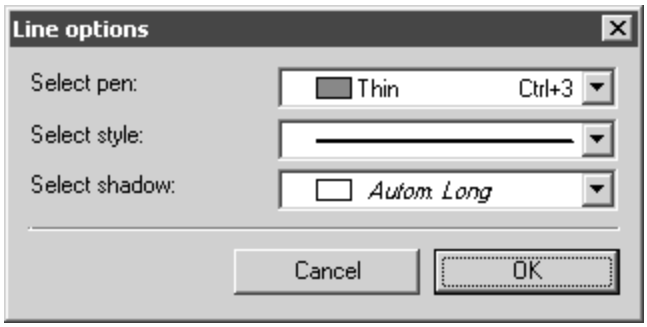

Here you can select the pen, style and halo for the leader line.

Shape Options for Callout Frame

The attributes for the frame element around the text entry are defined under **shape options**. When you select **Shape options**, the following dialog box appears:

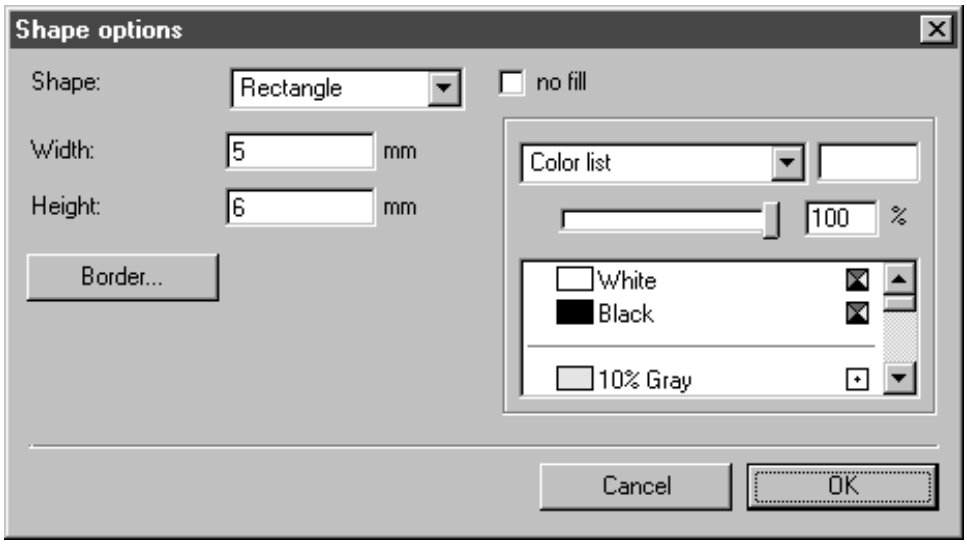

You can define the shape of the frame under **Shape options**. You can select between a range of different geometrical shapes. If you set `none`, all other settings cease to apply.

When you have set a frame shape, fields appear which match the size of the frame. Enter the desired value.

Note

Ensure that the frame size is not smaller than the extent of the text entries.

If the box next to **no fill** is not checked, then the frame element can be filled. You have the option of selecting one of the defined colors from the list or mixing your own CMYK or RGB color. Using the color list and setting a CMYK or RGB color are described in Show Fill Window on page 408.

The settings under **Border** define the border of the frame around the text element. When you select **Border**, the following dialog box appears:

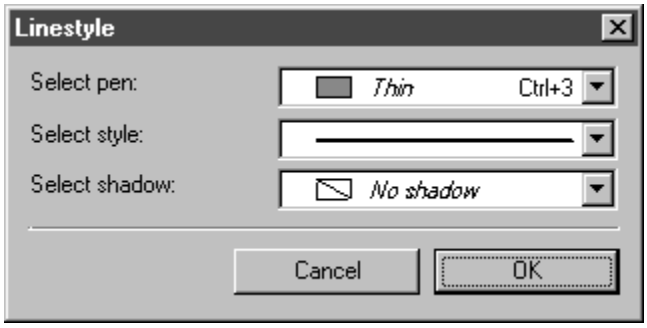

Here you can select the pen, style and halo for the border. If you select `no pen`, the border of the frame is invisible.

Use these Callouts as Hotspots

When this box is selected, hotspots are created for the callouts with this style. The entry for the numbering scheme is automatically created as the object name. For example, a `3` is generated for the name of a callout with the consecutive number `3`.

When the numbering of the callouts is updated, the names of the hotspots are also adapted.

Creating a New Style

Clicking on the **New** button creates a new callout style. This style will initially have the attributes of the last style displayed. Assign the text format a unique name. If a style with that name already exists, the following warning window appears:

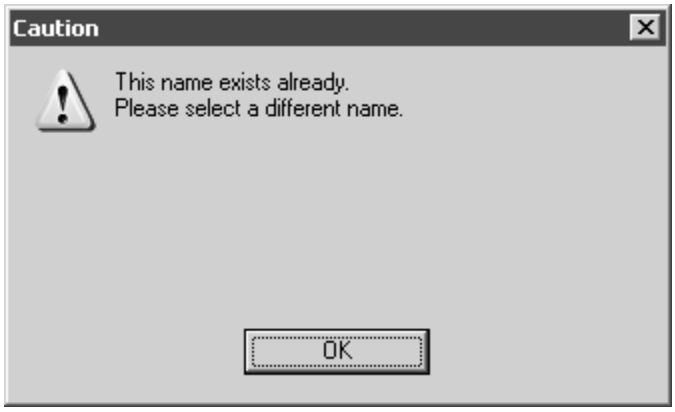

Confirm with **OK** and change the name. You can now change the settings of the new style as required and confirm these with **OK** when you have finished.

If you have clicked **New** by mistake or want to abort the creation process, you can delete the styles as described below.

You can also create a new style by selecting the **New callout style** from the **Callouts** window submenu.

Deleting a Style

You can delete the style currently displayed by clicking the **Delete** button.

Note

The standard style `Normal` cannot be deleted.

The callout style is deleted immediately provided it is not being used for callouts. Otherwise, a substitute style must first be defined for assigning to the affected callout elements:

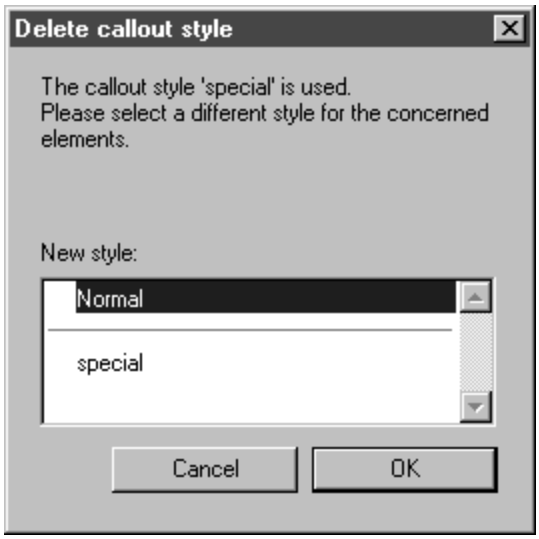

The new style must be assigned directly in order to avoid conflicts. This assignment cannot be undone. Consequently, the program will ask you for final confirmation if you click `OK`:

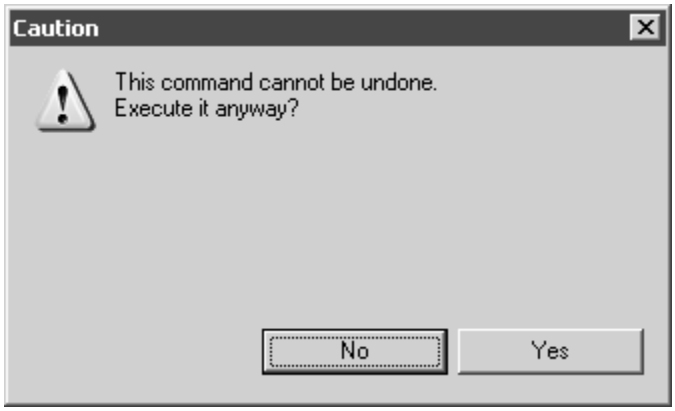

Click **No** if you do not want to make the changes. Click **Yes** to assign the new style with immediate effect. Although you can still cancel the **Edit callout style** dialog box afterwards, the assignments will be retained.

Note

Attributes that have been changed subsequently in element info with the deleted callout style are retained. For example, if you have subsequently assigned another prefix to a callout, the substitute style will not affect this change.

Selecting Style

You can select a style by clicking the name of a style in the **Callouts** window. The current style is then indicated by a highlighted background.

Your selection has the following effects:

- It changes the selected style into the current style

The current style functions as a preference for those callouts you still have to create.

Renumber Callouts

Selecting this command updates the numbering. If you have deleted one or more callouts, gaps will have appeared in the ascending numbering. The update closes these gaps. For instance, if you have created eight callouts with the numbers `1` to `8` and then deleted callout `5`, the subsequent callouts (`6`, `7`, `8`) will be moved down one number; i.e., to `5`, `6`, `7`.

Find Callout

You can use this command to e.g. select or find callouts according to the setting when there are a lot of callout numbers.

When you select this command from the pop-up menu, the following dialog box appears:

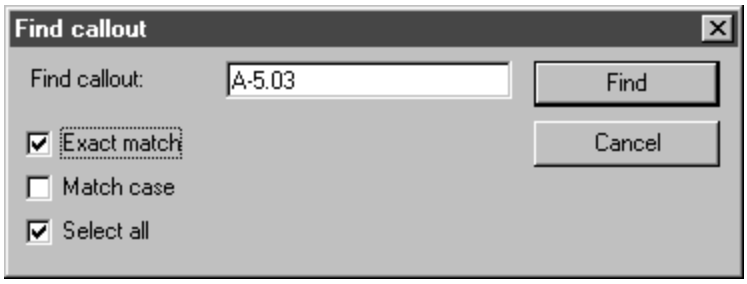

Find callout

Here you can enter the name of the callout or callouts you want to find.

Exact match

If you click this option, the program finds only callouts that exactly match the name entered.

Match case

If this option is selected, the search differentiates between upper case and lower case letters. If the entry is an upper case letter, as in the dialog box above, only callouts with an `A` will be found.

Select all

Use this option if you want to find several callouts that share part of the same name. It finds all callouts that share a part of their name with the name entered under **Find callout**.

Clicking on **Cancel** exits the dialog box. The command is not executed.

After confirming with **OK**, the callouts are shown selected. The area with the selected callouts is then zoomed so that it fills the window.

Placed Files Window

The **Placed Files** window is one of the eight windows that you can select in the attribute window.

The window shows the files that have been placed in the current file.

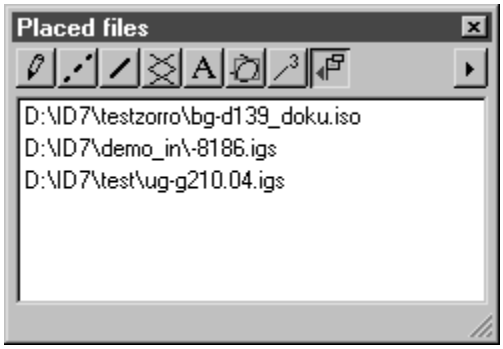

You can also tear off the window, move it anywhere in the working area and change its size. Clicking the **Close** button closes the window.

Clicking on the arrow at the top right or double-clicking an entry allows you to select the command for editing a placed file.

The **Placed Files** window displays the names of all files. As well as containing the name, each entry shows the path to the file's storage location and the file format.

Double-clicking on the name of an entry opens the **Placed File** dialog box. If you select the desired entry and click on the arrow at the top right to select the **Edit** command, the dialog box appears as depicted in the figure:

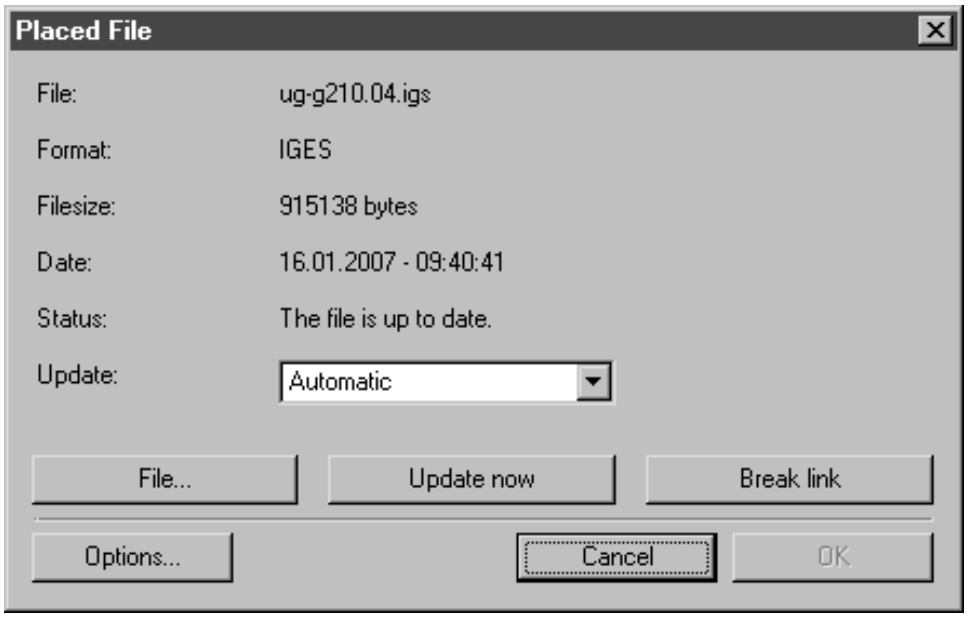

On opening the dialog you will see information on the file name, format and size, the date the file was last updated and the status of the original file. You cannot select the **OK** button. Clicking **Cancel** exits the dialog box without any changes being made. If you have changed any settings, you can only confirm these with **OK**. The **Cancel** button is no longer active.

Note

Applies to Arbortext IsoDraw CADprocess only.

*In the case of 3D files, it is not possible to break the link to the source file in 3D mode. The **Break link** button is unavailable.*

The setting options in this dialog box are described in Place on page 42.

Show Fill Window

Applies to Arbortext IsoDraw CADprocess only.

The **Show fill window** command allows you to show or deactivate the **Fills** window. When Arbortext IsoDraw is started, the **Fills** window is hidden. Calling up command **Show fill window** in the **Window** menu opens the **Fills** window.

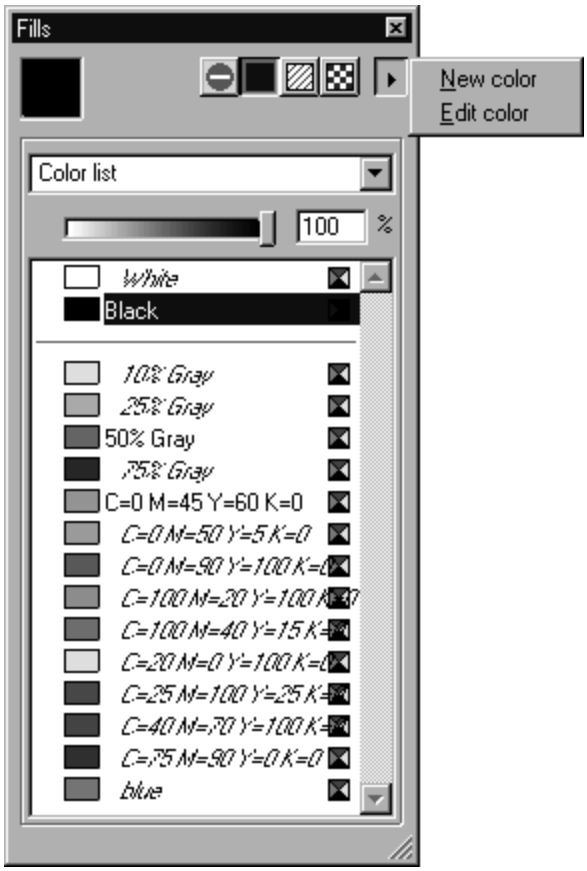

When Arbortext IsoDraw is started, the **Fills** window displays `No fill`. In the **Fills** window, you will see four buttons you can use to switch between the various fill types:

No fill	Existing fills will be removed
Color	Elements will be filled with a color
Hatching	Elements will be filled with a hatching
Pattern	Elements will be filled with a bitmap pattern

The figure above shows the **Fills** window with the **Color** button selected and the pop-up menu open for editing a color.

You can also tear off the window, move it anywhere in the working area and change its size. Clicking the **Close** button closes the **Fills** window. Clicking on the arrow in the top right-hand corner opens a pop-up menu containing further commands for editing colors.

The display field on the left shows the selected fill. If fill type **No fill** has been selected, you will see this symbol  .

Fill Type — No Fill

If the first button has been selected, the window content appears for fill type **No fill**. All elements shown below that can be filled will be shown without fill. If you have selected elements with a fill before you click the **No fill** key, the fill will be removed.

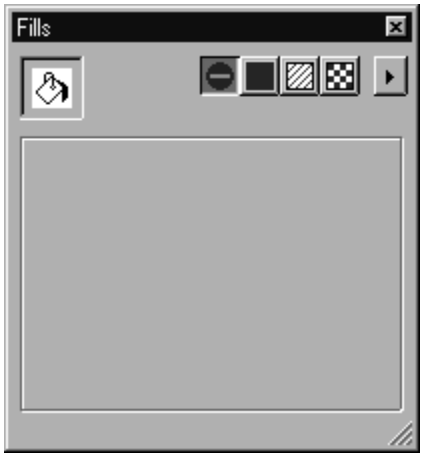

Fill Type — Color

Arbortext IsoDraw allows you to design elements in color. The process of coloring an element area is known as filling, and element contours can be assigned a contour color. Newly created colors appear in the color list and can therefore also be used for element contours.

If the second button, **Color**, is selected, the window content appears for the created colors. Unused colors are shown indented and in italics.

You can now select a color from the `Color list`, change one that has already been created or create a new one, change the current color using the tone slider or create your own CMYK or RGB color.

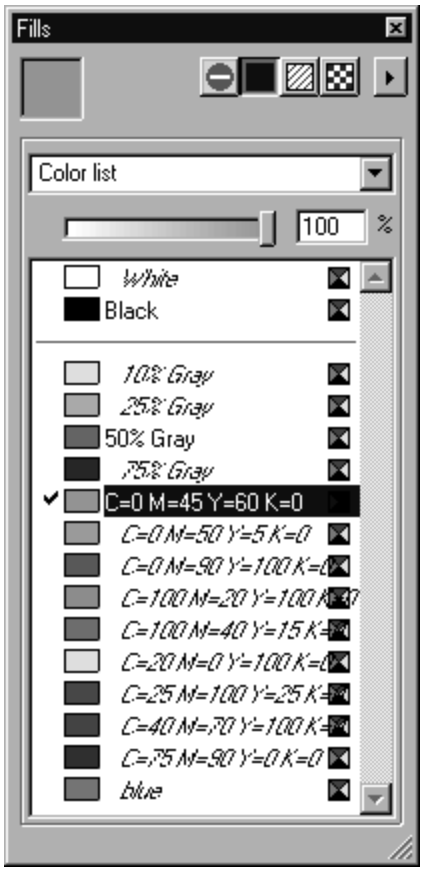

The selected color becomes the current color. The display field shows you how the color looks. All elements drawn subsequently that can be filled are filled with the selected color. If, before selecting a color, you have selected elements that can be filled, their fill will be changed to the current color.

If elements with fills are selected, a check mark appears to the left of the color boxes for the colors used with these fills. This allows you to easily identify the color used for a fill.

If you subsequently wish to fill an existing element with the current color, you can do this without selecting the element. Position the arrow cursor over the color display field. With your arrow over the element you wish to fill, release the mouse button. The element will be filled.

You can copy all the colors from the `Color list` into the list of another file in a similar way using drag and drop. Click a color from the list and drag this color to the window of the target file. The color now appears in the other file's list.

Note

The procedure for making general changes and extensions to the standard preferences for colors is described under *Preferences on page 108**.*

About Colors in Arbortext IsoDraw

Arbortext IsoDraw creates colors based on the CMYK model which is also the process employed in the field of four-color printing. This model generates different colors by overprinting the four primary colors; cyan (C), magenta (M), yellow (Y), and black (K), in varying proportions. To allow the primary colors to be printed in separate printing runs, the color drawing must first be broken down into four individual color separations (one for each primary color). This process is known as color separation. Color mixes derived from the four primary colors which can later be split into individual process color separations are known as CMYK process colors.

You can also create your colors using the RGB color system. The RGB color system is used to depict colors on the screen. RGB colors are created by combining the three primary colors—red (R), green (G), and blue (B). Arbortext IsoDraw can convert a color created in the RGB color system to a CMYK process color or custom color.

You should use the RGB color system particularly when you want to use your color illustrations for online documentation. If you need high print quality, then it is essential to choose CMYK process colors.

In addition to creating colors with the CMYK model or using the RGB color system, Arbortext IsoDraw also allows you to define custom colors based on the CMYK model. Custom colors (also known as full-tone colors, special colors, spot colors, and real colors) are available as standardized, ready-mixed printing inks at the printers. They are used if, for example, the printed result contains fewer than four different colors. This reduces printing cost by reducing the number of color separations and printing runs. There are also some colors which cannot be produced effectively from the four process colors. A separate color separation is created for each custom color during the separation process.

Note

The question of whether you should use CMYK process colors or custom colors is only really important if you are planning to reproduce the drawing later using color printing.

Tone is another option for defining color in Arbortext IsoDraw. Tones are not colors in their own right but merely modifications of intensity (0-100%) of colors that have already been defined.

Because colors are depicted on the monitor using the RGB color system, the screen representation of the colors created using the CMYK model will usually vary somewhat from the subsequent printed result.

Arbortext IsoDraw supports color printers. Color separation is not possible directly in Arbortext IsoDraw; instead, you must export the drawing in EPS format and then integrate it into, for example, a layout program with separation functions, or output it with a special separation program.

You can still print out the drawing if you have used the RGB model for your colors. The colors are converted to CMYK colors by the printer. However, the printed colors are likely to differ from those in the screen representation.

Selecting Colors

Basically, Arbortext IsoDraw distinguishes between named colors and unnamed colors. These are defined as follows:

Named colors
: are displayed in the **Colors** menu. Elements and contours are merely assigned a reference to these entries, so that any change to a named color automatically has the effect of changing all the elements concerned.

Unnamed colors
: are customized color mixes and tones which are assigned directly to an element.

You can choose a color in the **Fills** window by selecting `Color list`, `Free CMYK color`, or `Free RGB color` from the list below the symbol bar.

Color List

If you select the color list, the list of all available colors appears. The colors `White` and `Black` are the standard colors used in Arbortext IsoDraw. You cannot delete these colors or change their names. The other standard colors created in Arbortext IsoDraw can be edited and deleted. For CMYK colors, a colored rectangle appears behind the entry and for RGB colors a three-colored circle. For custom colors, a circle appears in the rectangle instead.

Click the required color. The current color is indicated by a highlighted background and appears in the display field.

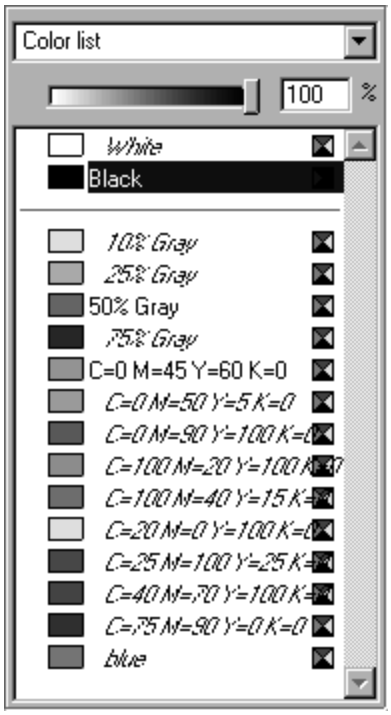

Free CMYK Color

When you select `Free CMYK color`, the slider for the color components **C** (cyan), **M** (magenta), **Y** (yellow), and **K** (black) appears instead of the color list. Create your required color mix. Alternatively, you can enter percentage values directly into the entry fields. This color becomes the current color, but is not stored as a defined color. If you want to use this color again afterwards, you will need to set it again. In this situation, you are advised to use the command `New color` and create the color this way.

Free RGB Color

When you select `Free RGB color`, the sliders for the color components **R** (red), **G** (green), and **B** (blue) appear instead of the color list. Create your required color mix. Alternatively, you can enter percentage values directly into the entry fields. This color becomes the current color, but is not stored as a defined color. If you want to use this color again afterwards, you will need to set it again. In this situation, you are advised to use the command and create the color this way.

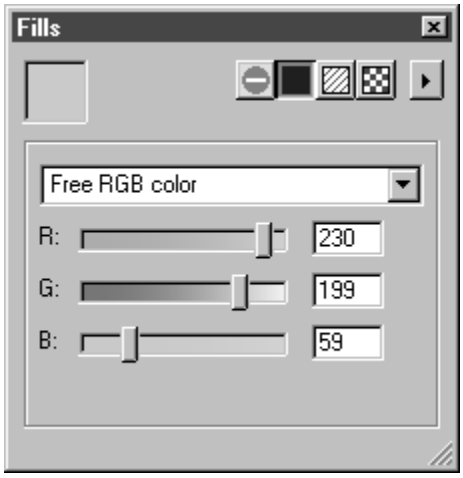

Setting the Tone

Tones are employed to produce graduated versions of CMYK process colors, RGB colors or custom colors which have already been defined. The slider below the pop-up color selection menu is set to `100`**%** of the color selected from the color list. If you wish to change the tone, use the slider or the entry field to adjust the tone. This new tone is not stored in the created color. If you want to use the selected color with the modified tone again, you will need to set it again. In this situation, you are advised to use the command `New color` and create a new color with the tone of the initial color.

Editing Colors

The dialog box for **New color** and **Edit color** is used for setting the color definitions:

`CMYK process color`, `RGB color`, `Custom color`, or `Tone`.

CMYK process colors, RGB colors and custom colors are generated using the same process on the basis of the CMYK color model. Which preference you select here depends on how the documents with your drawing are to be used. For conventional color printing processes, you should use CMYK process colors or custom colors as required. If you only want a printout on a color printer, this setting is unimportant. If the documents are primarily for online publication, it is best to create the colors using the RGB method. (See About Colors in Arbortext IsoDraw on page 411.)

Create the required color mix for the CMYK color components; **C** (cyan), **M** (magenta), **Y** (yellow), and **K** (black), or, the RGB color components; **R** (red), **G** (green), and **B** (blue) using the sliders or the entry fields.

Tones are employed to produce graduated versions of colors which have already been defined.

Commands for Editing Colors

To edit a color, click on the arrow in the top right-hand corner of the **Fills** window and select one of the two commands from the pop-up menu. When you select a command, a dialog box appears. The dialog boxes for **New color** and **Edit color** are structured in the same way. The only difference is that, for the **New color** window, an entry box appears for the name, whereas for the **Edit color** window, the name of the current color is already entered. The following description applies for both dialog boxes.

The **Edit color** dialog box also appears if you double-click on the name of a color in the color list.

Edit Color

To edit a color, select the command **Edit color**. The following dialog box opens:

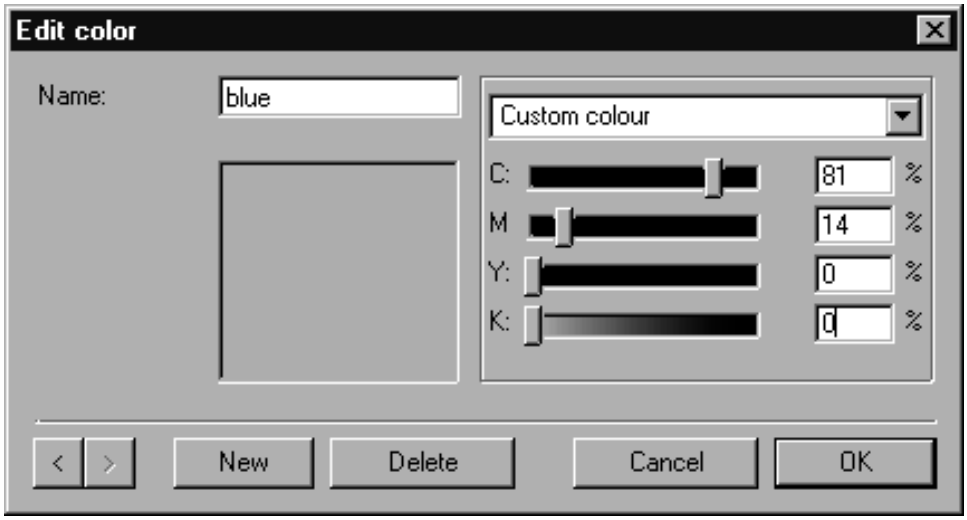

The displayed values refer to the **current color**. The color field under the name shows you what this color looks like. You can page through the list of colors using the two arrow buttons  .

This dialog box allows you to edit the features of all the colors which have been defined for the active illustration. You can also create new colors or delete existing ones.

Your changes will only be valid if you click **OK**. Clicking **Cancel** quits the dialog box without changing the color list.

Note

If you delete a color, the elements, pens or halos using this color will be assigned a substitute color. This change cannot be undone even by canceling the dialog box.

Modifying Color Attributes

The pop-up menu shows whether the color has been created as a **CMYK process color**, **RGB color** or **custom color**. You can change the color type and change the color mix using the slider or the entry fields.

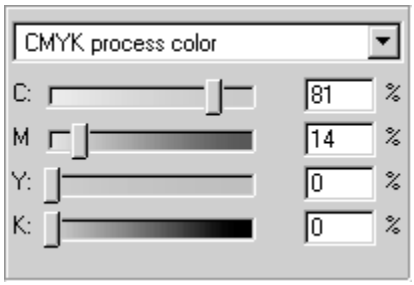

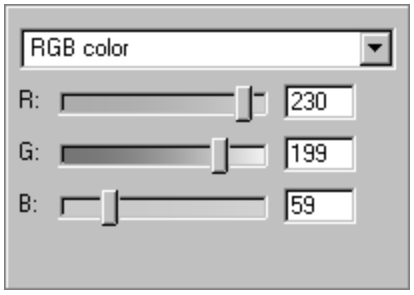

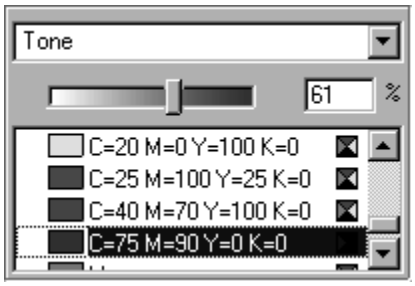

If you wish to create a **tone** for the selected color, click **New** and enter a new name which is related to the initial color. The color attributes of the initial color are retained. In the pop-up menu, select **Tone** and click on the initial color in the color list. Use the slider or the entry field to set the tone. If you click on **OK**, the modified color will appear in the color list.

Creating a New Color

To create a new color, click the **New** button. This color initially adopts the color of the selected color. Assign the text format a unique name. If a color with that name already exists, the following warning window appears:

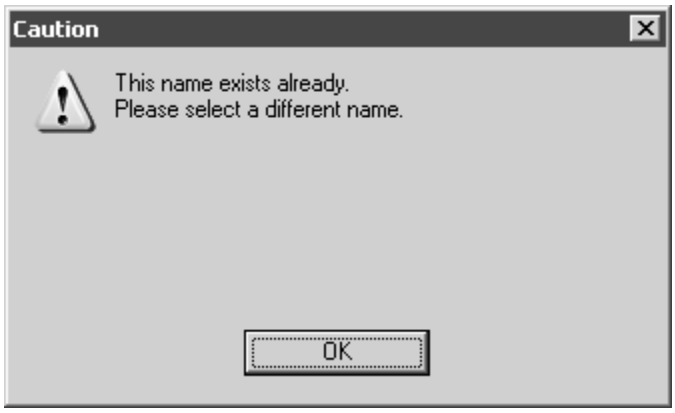

Confirm with **OK** and change the name. You can now change the settings as required.

If you have clicked **New** by mistake or want to abort the creation process, you can delete the color as described below.

You can also create a new color by selecting the **New color** command from the pop-up menu.

Deleting a Color

You can delete the color currently displayed by clicking the **Delete** button.

Note

The colors `Black` *and* `White` *cannot be deleted.*

The color will be deleted immediately if it is not being used in the illustration or by a pen or halo. Otherwise, a substitute color must first be defined for assigning to the affected elements:

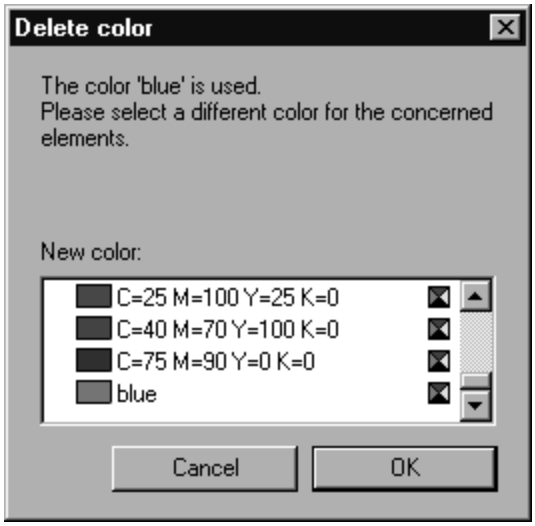

The new color must be assigned directly in order to avoid conflicts. This assignment cannot be undone. Consequently, the program will ask you for final confirmation if you click **OK**:

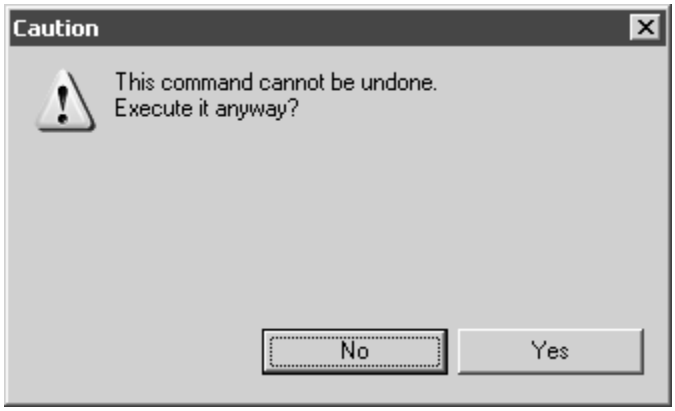

Click **No** if you do not want to make the changes. Click **Yes** to assign the new color with immediate effect. While you can still cancel the **Edit color** dialog box afterwards, the assignments will be retained.

Named and Unnamed Colors

You can use the color list to define named colors, i.e. colors which bear a unique name. This will be particularly helpful in standardizing the use of colors and simplifying the checking process.

However, you may often define only primary colors and then apply various tonesof this color to the individual elements. In order that you do not have to define each tone by name, it is possible to create an `Unnamed tone` using the tone slider.

A further area of application for unnamed colors are color blends (see Parallel Paths on page 579). The number of different colors which could be generated in such applications would be so large that a color list would be ineffective. Since the actual number of colors is unimportant in color printing, you can create `free CMYK` or `free RGB` colors in these and similar cases. These are customized color mixes which are intended solely for a given application.

A description of the color list, tones and free colors can be found in Selecting Colors on page 412

You can apply a number of criteria to ease your task of selecting from this host of options:

Are your actions restricted by the need to apply standards or other specifications in using colors, e.g. in the CGM environment.

Your standard preferences should be colors which you want to or are allowed to use (see Preferences on page 108). Do not use any free CMYK colors, RGB colors or tones.

Will the illustration be output on a color printer or handled using conventional color printing techniques?

If you will be using a color printer you can make full use of the possibilities offered for color design work. The quality and color fidelity depend solely on the printer you use. This is only the case in conventional color printing processes if you use four-color printing. In this case, all the colors are separated into their primary colors (cyan, magenta, yellow and black) so that the actual number of colors is irrelevant. If, however, you choose to print with custom colors such as black and a Pantone™- or HKS color, you must ensure that only the defined custom colors or tones of these colors are used. In this case, you must not use any named CMYK process colors or free CMYK colors.

Will the illustration be exported to a different format?

The color information of an Arbortext IsoDraw illustration is closely linked with the technology of the PostScript™ world. If you export the illustration as an EPS or Adobe Illustrator™ file, this information will be retained. If you export to other formats, however, the target system will frequently set restrictions. By way of example, it is generally not possible to import large quantities of color information into CAD systems since the latter are not designed for this purpose.

Fill Type Color in 3D Mode

When working in 3D mode, there are no restrictions on the selection of a color in the **Show fill window** menu.

If you have selected **Rendering** or **Smooth rendering** display mode for your drawing, the objects or surfaces are depicted with color rendering. You can change the colors that have been assigned using the **Fills** window. You can use the entire range of available colors and specify new colors.

To assign a new color, select the object or the area of the drawing to which the new color is to be applied by using the arrow cursor or the object window. Now click the button with the color symbol in the **Fills** window. Select the desired color from the color list, or create your own CMYK or RGB color mix. The selected color is applied directly to the selected area.

You can use this opportunity to change colors in various ways. For example, you can apply the same color to parts that belong together in extensive assemblies. If you rotate your drawing into a different orientation, you can then easily locate the parts that are in the same color.

The opportunity to export from 3D mode into various formats allows you to color a drawing in line with your own needs and then export it into the desired format. Colored drawings exported into VRML can then be edited further with special rendering software. When exporting into Wavefront, all colors are depicted in a single shade of gray. If you export the drawing into a raster format, a colored graphic, e.g. for a product brochure, is available.

Fill Type — Hatching

Arbortext IsoDraw enables you to fill elements with hatching. The hatchings available in the current file appear in the hatching list. The hatchings must first be drawn in a separate file and assigned object info.

If the third button is selected, the window content for the fill `Hatching` appears. The hatching list displays all defined hatchings.

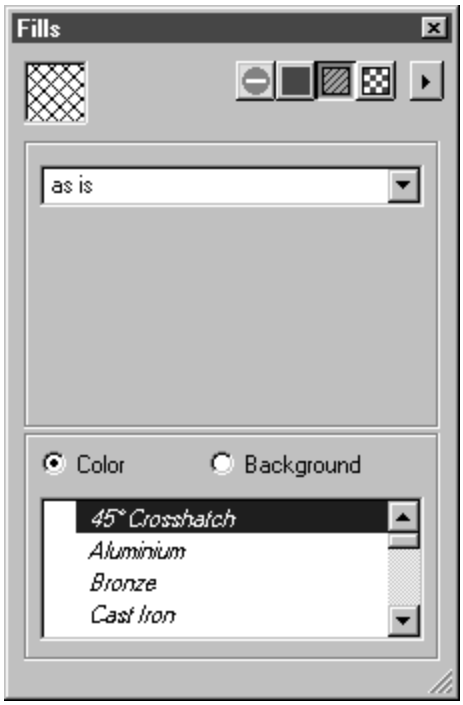

A selected hatching becomes the **current hatching**. The display field shows you what the hatching looks like.

All elements drawn afterwards that can be filled are filled with the selected hatching. If, before selecting a hatching, you have selected elements that can be filled, their fill will be changed to the **currenthatching**.

If elements with fills are selected, a check mark appears to the left of the entries of the hatchings for which these fills have been used. This allows you to easily identify the hatchings used for fills.

If you subsequently wish to fill an existing element with the current hatching, you can do this without selecting the element. Position the arrow cursor over the hatching display field. Click and hold down your mouse button, then drag it in the direction of the element. With the arrow over the element you wish to fill, release the mouse button. The element will be filled with the hatching.

Selecting Hatching and Color for Hatching

Click the required hatching in the list. The hatching becomes the current hatching. The current hatching is indicated by a highlighted background and appears in the display field.

The hatching initially appears as it has been created in the hatching file. You may, however, wish to change the colors for the drawn elements or the background. In this case, Arbortext IsoDraw offers additional settings. By selecting **Color** or **Background**, you can make the individual settings visible.

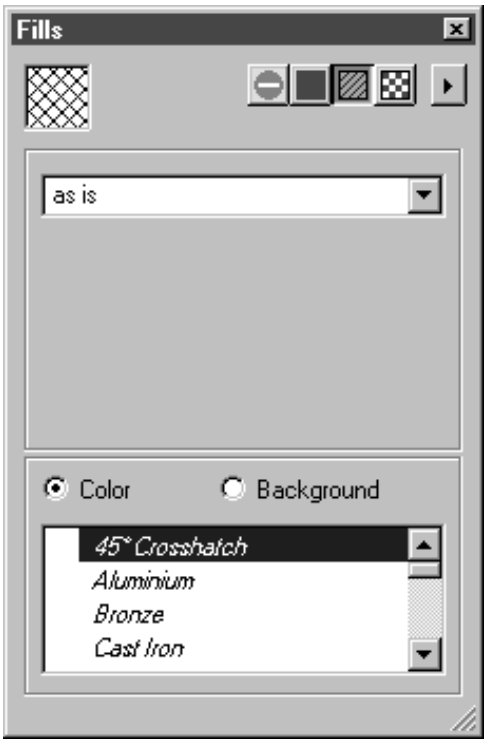

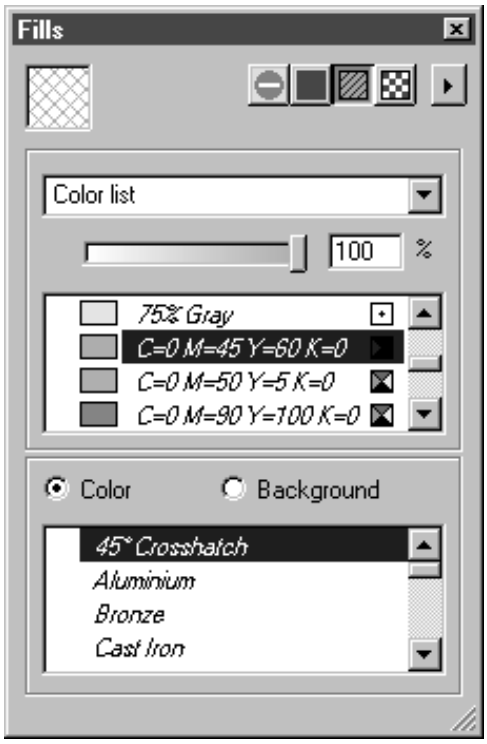

Color

If this option is selected, the setting for the foreground color is shown. Initially, the pop-up menu shows as-is. This means that the lines of the hatching are drawn in the color used in the hatching file. You can change this setting by selecting a color with the help of the pop-up menu. You can use predefined colors or free CMYK or RGB colors. More information on selecting colors can be found under **Fill type Color**.

More information on selecting colors can be found under Selecting Colors on page 412.

Background

If this option is selected, the setting for the background is shown. Initially, the pop-up menu shows as-is. This means that the hatching is drawn just as it has been stored in the file. If you have changed the foreground color, the line elements will be drawn in this color. If your hatching does not contain any filled areas, you can see the illustration's background between the lines. You can now select a color in

the pop-up menu to cover the background before the hatching is drawn. You can use predefined colors or free CMYK or RGB colors. More information on selecting colors can be found under **Fill type Color**.

Note

*If you have selected fill type `Hatching`, the commands **New color** and **Edit color** are disabled. To edit colors or to create new ones, you must first change to fill type `Color`.*

Organizing Hatchings

Arbortext IsoDraw manages all hatchings in the `Patterns` directory. This is located in your `Preferences` folder. More information on organizing preferences can be found in Preferences on page 108. Hatchings are stored in Arbortext IsoDraw format. An Arbortext IsoDraw file can contain several hatching objects.

Note

In the `Patterns` directory, you will find the files `Standardhatchings.iso` and `Standardpatterns.iso`. These files contain the hatchings and patterns supplied with the program. They must not be changed.

Creating New Hatchings

Create an empty file and store it in directory `Patterns` under any name you like. Now open the file `Standard hatchings`. There you will see a group of elements for each standard hatching. Copy one of these groups into your empty file. Now ungroup the group. You will now see a rectangle that has neither contour nor fill. This rectangle is used to define the limits of the hatching. All other elements have the hatching. Delete all the elements except the rectangle. Now draw the elements within the rectangle that have the hatching you want. Remove any projecting parts of the elements.

Note

Masked elements or image elements must not be used in hatchings.

Now group the hatching elements and the rectangle. Then create object info for this group (see Object Info on page 223). Use the automatic ID suggested by Arbortext IsoDraw. For a name, enter a term that can be used to identify the hatching. This name will subsequently appear in the hatching list.

Save the file and re-launch Arbortext IsoDraw. The hatching list now contains the hatching you have created.

Fill Type — Pattern

Arbortext IsoDraw enables you to fill elements with a pattern. The patterns available in the current file appear in the pattern list. The patterns must first be drawn in a separate file and assigned object info. For editing colors, Arbortext IsoDraw distinguishes between two types of pattern. These are either black/white patterns (1 bit image depth) and patterns with grayscales or colors (with more than 1 bit image depth). Patterns with image depths of more than 1 bit cannot be defined in color.

If the fourth button is selected, the window content for the fill **Pattern** appears. The list of patterns displays all the defined patterns.

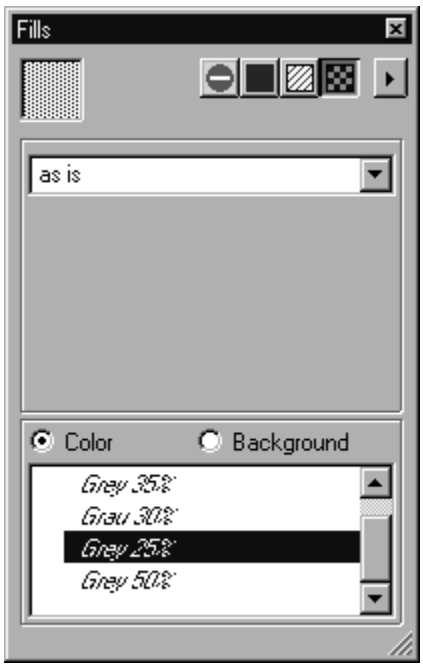

A selected pattern becomes the **current pattern**. The display field shows you what the pattern looks like.

All elements drawn subsequently that can be filled are filled with the selected pattern. If, before selecting a pattern, you have selected elements that can be filled, their fill will be changed to the **currentpattern**.

If elements with patterns are selected, a check mark appears to the left of the entries of the patterns for which these fills have been used. This allows you to easily identify the patterns used for fills.

If you subsequently wish to fill an existing element with the current pattern, you can do this without selecting the element. Position the arrow cursor over the pattern display field. Click and hold down your mouse button, then drag it in the direction of the element. When the cursor lies over the element you wish to fill, release the mouse button. The element will be filled with the pattern.

Selecting Patterns and Colors for Patterns

Click the required pattern in the list. The pattern becomes the current pattern. The **current pattern** is indicated by the highlighted background and appears in the display field.

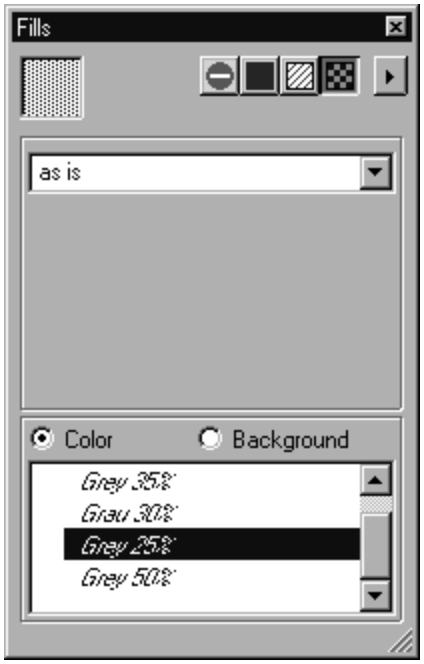

The pattern initially appears as it has been created in the pattern file. You may, however, wish to change the colors for the foreground or the background. In this case, Arbortext IsoDraw offers additional settings. By selecting **Color** or **Background**, you can make the individual settings visible.

Note

This function is only available for bitmap patterns with an image depth of 1 bit.

Color

If this option is selected, the setting for the foreground color is shown. Initially, the pop-up menu shows as-is. This means that the black pixels of the pattern are also drawn in black. You can change this setting by selecting a color with the help of the pop-up menu. You can use predefined colors or free CMYK or RGB colors.

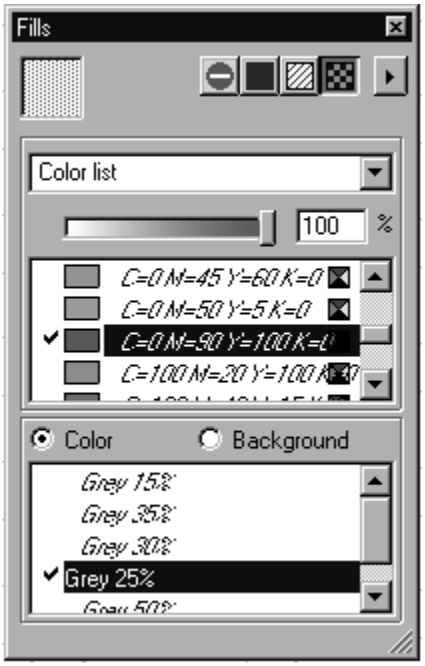

Background

If this option is selected, the setting for the background is shown. Initially, the pop-up menu shows as is. This means that the white pixels of the pattern are also drawn in white. If you have changed the foreground color, the black pixels will be drawn in this color. You can now use the pop-up menu to select a color that the white pixels of the pattern are to be drawn with. You can use predefined colors or free CMYK or RGB colors.

Note

If you have selected fill type `Pattern`*, the commands* ***New color*** *and* ***Edit color*** *are disabled. To edit colors or to create new ones, you must first change to fill type* ***Color****.*

Organizing Patterns

Arbortext IsoDraw manages all patterns in the `Patterns` directory. This is located in your `Preferences` folder. More information on organizing preferences can be found in Preferences on page 108. Patterns are stored in Arbortext IsoDraw format. An Arbortext IsoDraw file can contain several pattern objects.

Note

In the `Patterns` directory, you will find the files `Standardhatchings.iso` and `Standardpatterns.iso`. These files contain the hatchings and patterns supplied with the program. They must not be changed.

Creating New Patterns

Create an empty file and store it in directory `Patterns` under any name you like. Now open the file `Standardpatterns`. There you will see an image element for each standard pattern. Copy one of these image elements into your empty file. Now use image editing to change the pattern as you wish.

Then create object info for this image element (see Object Info on page 223). Use the automatic ID suggested by Arbortext IsoDraw. For a name, enter a term that can be used to identify the pattern. This name will subsequently appear in the pattern list.

Save the file and re-launch Arbortext IsoDraw. The pattern list now contains the patterns you have created.

Show Object Window

Using the **Window** menu command **Show object window**, you can show or deactivate the **Objects** window. The **Objects** window is hidden when Arbortext IsoDraw is started. Choosing **Window ▸ Show object window** opens the **Objects** window. It is closed again by launching the command again or by clicking the **Close** button in the window.

Objects and the Objects Window

An object is an element or group of elements to which additional object information has been assigned for identification purposes. Object information can be created using the command **Object Info**on the **Objects** menu.

When 2D or 3D data is imported, pasted or placed (only 2D data) into Arbortext IsoDraw, the object information contained in the data is also adopted. It appears in the **Objects** window as soon as the data has been imported.

After importing or placing 3D data, you can check and change data in 3D mode using the functions in the **Objects** window. The data is converted to the 2D window complete with all changes. The object information is carried over.

When a name has been assigned to an object, the **ID** and **Name** of the object appear in the **Objects** window.

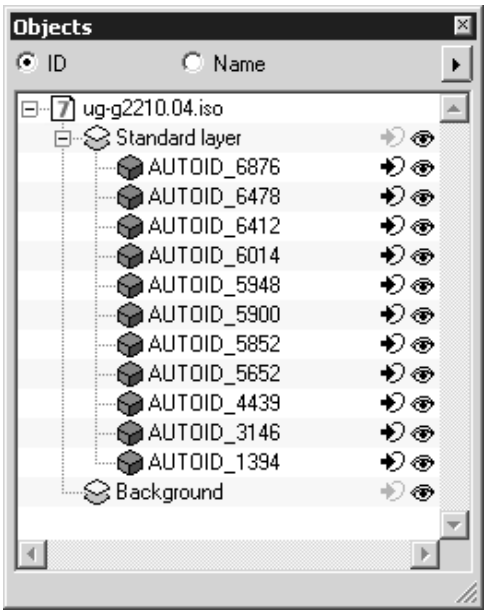

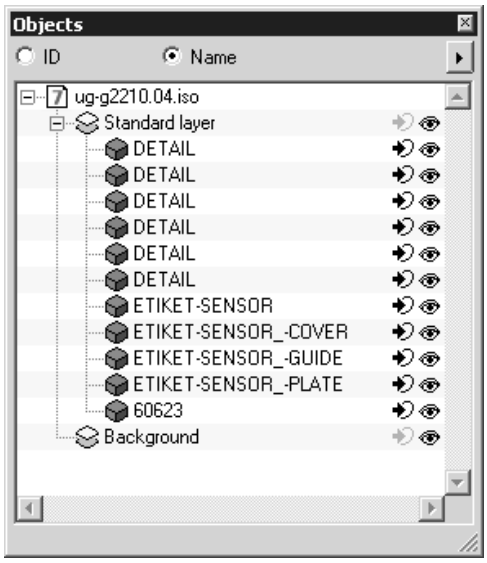

When you move the mouse pointer over the drawing, an object tip for the object appears. The tip shows the **ID** and the name of the object.

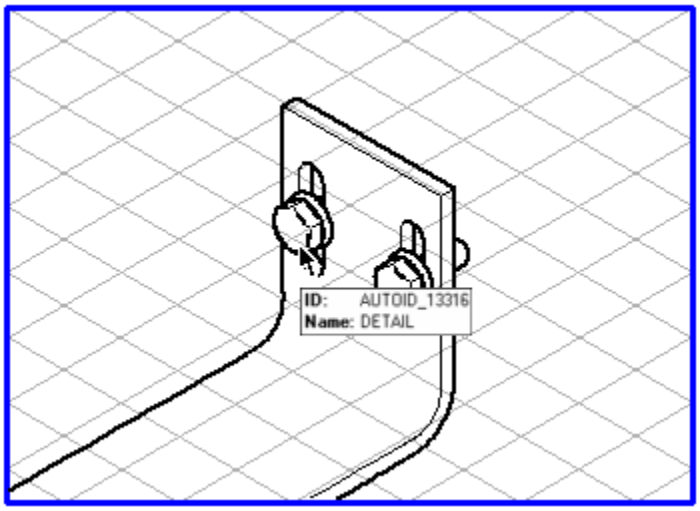

When objects have not been assigned names, the groups and elements appear in the **Objects** window with the name `Group` only. The **ID** only appears in the dialog box of menu command **Object Info**. The same applies for 3D data if the option **Create object information for assemblies** has not been selected.

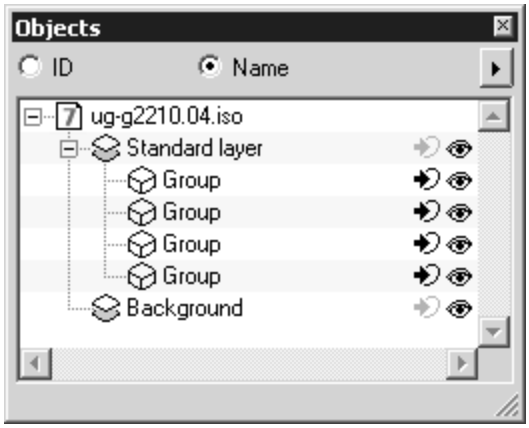

Structure of the Objects Window

Once you have opened the window, you will see the name of the current file together with a **+** symbol in front of the name.

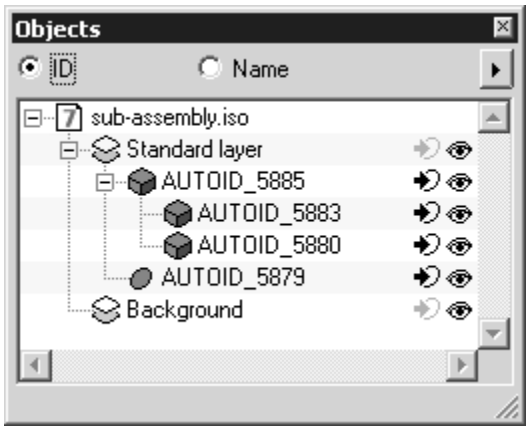

Clicking the **+** symbol calls up the `Standard layer` and the `Background layer`. Other layers may also be displayed. Clicking the **+** symbol for a particular layer displays the IDs of the groups and elements. All objects which are preceded by a **+** symbol contain further nested subgroups or elements.

If you hold down the CTRL key when clicking the **+** symbol in front of the file name, all the objects contained within will become immediately visible. One click on the **+** symbol turns it into a **-** symbol. Clicking the **-** symbol closes the group, layer or entire object structure.

Objects can be either groups, imported assemblies or elements. If a group is identified by a solid cube , it has object info. The cube is dark blue in color.

A light blue cube indicates that the object is a placed object.

If the cube is not solid , the group/assembly does not have object info. It is `unnamed`.

An element is always preceded by a solid ellipse symbol. This means that only elements with object info appear in the **Objects** window.

If you select **ID**, you will see the `IDs` of the objects as you did when opening the window for the first time. If you click **Name**, the names of the objects appear as specified.

Clicking the arrow at the top right opens a pop-up menu which contains further commands for editing objects in the **Objects** window.

Selecting an Object

As well as the arrow cursor in the drawing, you can also select an object in the **Objects** window. This is particularly useful with large assembly units since you can use the object name to uniquely select the correct object. To select the object, click its name or ID. The object is selected in the drawing. Holding down the CTRL key allows you to click and select several objects one after the other. If you want to select several objects which are positioned one on top of the other, you must first select the top or bottom object. While holding down the SHIFT key, you can then select all objects between the object already selected and the object that you click. If an object is already selected, clicking it will cancel the selection.

Copying an Object into another File

You can copy an object into another file using the **Copy** and **Paste** menu commands or, using the drag and drop function, by copying it directly from the **Objects** window into the file. To do so, click the name of the object, hold down the mouse button and drag the object to the drawing sheet of the other document. Now release the mouse button. The object will be copied to the other document. If you have imported or placed files and are working in 3D mode, when copying, the drawing also opens in 3D mode in another document. In principle, all 2D, 3D and object information is also copied, so that you can continue editing the objects in the same way as in the original file.

Object Settings

Each object has a maximum of three setting options that you can select at will.

The first symbol shows that an animation has been created for the object. Clicking on the **Pen** symbol calls up the **Edit Animation** and **Timeline** dialog boxes. The object's animation is selected in the dialog boxes. If the pen symbol is grayed out, the animation cannot be selected. It cannot be edited but can still be played back. An animation cannot be selected when the drawing is in 3D mode (see also Edit Animation on page 241).

Clicking the arrow symbol zooms in on the associated object, which then appears large on the screen. If the object has been selected, the highlighting color will ensure it stands out from its immediate surroundings. This offers an easy means of obtaining an overview of the orientation and extent of the object. Clicking the display tool returns you to the complete drawing.

An object can be either visible or invisible. Clicking the **eye** symbol makes the object invisible on the drawing. The **eye** closes . This enables you to temporarily hide an object.

If an object is visible in 3D mode, it is converted to the 2D window. Invisible objects are not converted. This can be useful if you do not need components for your illustration.

Objects and Object Info

For each object, you can call up the **Object Info** command in the **Objects** menu. Do this by selecting the object you want to call up the object info for. You can also call up the object info directly by double-clicking the ID or the name of the object.

You can also change the entries in the boxes of the object info dialog box. Once you have confirmed the change, the entries for **Name** and **ID** will appear in the **Objects** window.

Note

Notes on object info in 3D files:

With imported or pasted 3D files, object info can be selected and edited in 3D mode. If an imported file has been converted into 2D mode, object info can still be selected and edited.

Showing Objects in the Objects Window

With this menu command, an object selected in the drawing is highlighted in the **Objects** window. This makes it easy to find the name of an object (see Show Objects on page 337).

Commands in the Pop-up Menu

The commands in this pop-up menu can be used to edit objects in a number of ways.

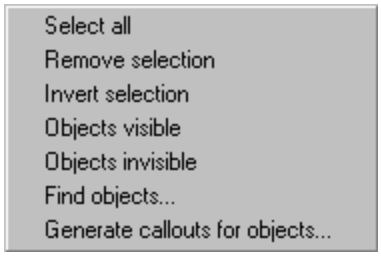

Select All

The **Select all** command can be used to select all the objects in a particular drawing.

Remove Selection

If you click **Remove selection**, selection of all selected objects is cancelled.

Invert Selection

Assume that one or more objects have been selected. If you now select the **Invert selection** command, all unselected objects will now be selected and all selected objects will be unselected. This command is useful if you want to select the majority of the objects in the window. Select the objects that you do not want to include in your selection and then use the **Invert selection** command.

Objects Visible, Objects Invisible

The **Objects visible** and **Objects invisible** commands have the same functions as the eye symbol to the right of the object name. The only difference lies in the fact that these commands allow you to render a whole selection visible or invisible. The **Objects visible** command makes all selected objects visible. When working in 3D mode, visible objects are converted into the 2D window. Selecting the **Objects invisible** command hides the selected objects. Hidden objects in imported, pasted or placed drawings are not converted into the 2D window.

Find Objects

This command enables you to find a part quickly in a long object list. Depending on the setting, you can also select objects whose name contains a particular part of a name.

When you select the command, the following dialog box appears:

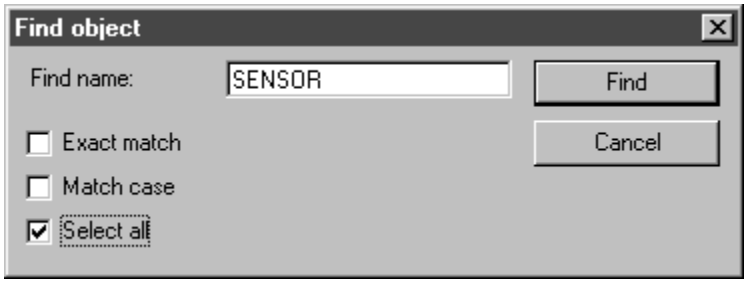

Find name

Here you can enter the whole name or part of a name that you want to find.

Exact match

If you click this option, only names that exactly match the name entered are found.

Match case

If this option is selected, the name search differentiates between upper case and lower case letters. If the data was entered in upper case letters, as in the dialog box above, only those names that contain the entry in upper case letters will be found.

Select all

Use this option if you want to find several names that have part of the same name in common. It finds all names that share a part of their name with the name entered under **Find name**.

Clicking on **Cancel** exits the dialog box. The command is not executed.

After confirming with **OK**, the names are shown selected in the **Objects** window. The objects are also selected in the drawing.

Generate Callouts for Objects

Note

*The **Generate callouts for objects** command described below cannot be selected when you are working in 3D mode. After the projection you can select the command in the **Objects** window and create callouts for the generated 2D illustration.*

You can use this command to automatically create **callouts** for the current file. The setting options allow you to control:

- Which objects or groups should receive a callout.
- Where the object information that is used to create callouts comes from; objects in the illustration, a parts list, or a bill of material (BOM).
- Whether or not callouts are linked to objects. (See Callouts Connected to Objects on page 568.)

The callout style and arrangement of the callouts on the drawing can be set as required.

If you select this command, the following dialog box will appear:

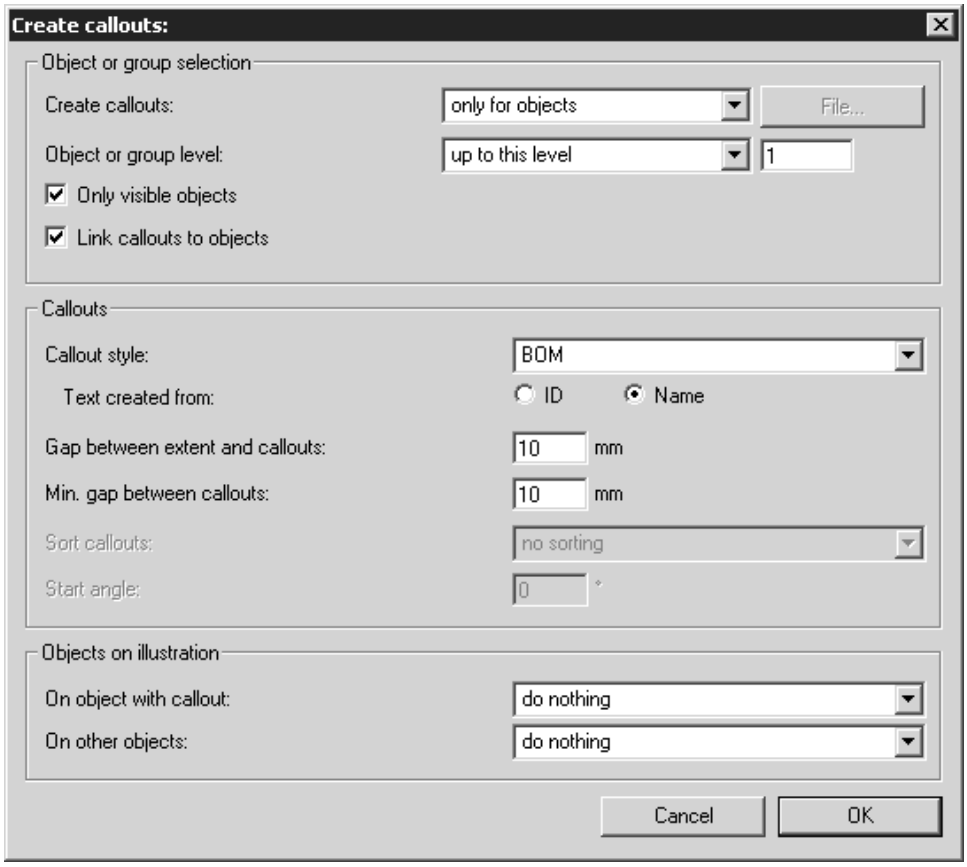

Object or Group Selection

With **Create callouts**, you can define whether objects and/or groups should receive a callout. Make this selection in the pop-up menu.

If your drawing contains only objects, select **only for objects**.

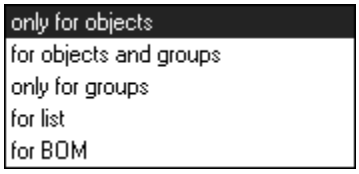

If unnamed groups also appear in the **Objects** window with the name `Group` and you also want to assign callouts to these groups, select option **for objects and groups**. If your drawing consists only of groups, select option **only for groups**. This applies to older Arbortext IsoDraw drawings, for example, or imported drawings without object info. Please ensure that all components and/or units that are to receive a callout are grouped.

If **for list** is set, the Arbortext IsoDraw file must contain objects. Information about which objects are to receive a callout is obtained from a previously exported **object list** of the current file. The list can be edited here before use.

An object list of this type is exported as a tab-delimited file. It must contain the IDs or names of the objects. If you want to add a customized positioning to the list, you should export attribute **Name** so that the objects can be easily identified. How to create an object list is described in Preferences on page 108.

To define a positioning for the objects, or to remove objects from the list, open the list in a suitable program e.g. Microsoft Excel. The selected attributes for the list appear in columns in the file.

When particular objects are to receive no callout, delete the whole row of entries for the object from the list.

If you want a customized positioning, enter the numbering in a free column. You can select any entries for the numbering. The only important thing is to ensure that the pattern matches the callout style that has been set. If the pattern `Numerical` is set, your entries must not contain any letters (see Show Attribute Window on page 352).

Saving the list after editing.

When you select **for list**, the **File** button is enabled. Click on this button and search for the appropriate object list in the following dialog box. Confirm your selection by clicking **Open**.

The following dialog box appears:

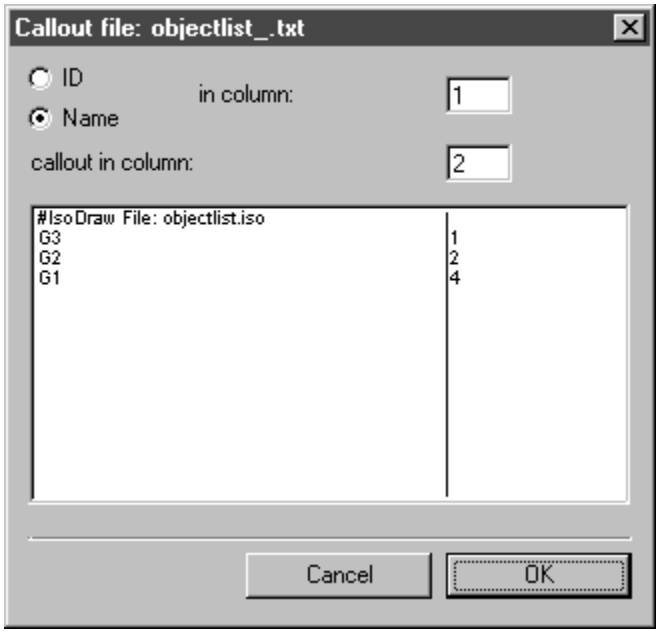

Here you can select the columns in the object list in which the IDs/names or the callout numbering are entered. Click **OK** to confirm your selection.
Arbortext IsoDraw will now create the callouts in accordance with the preferences from the object file.

You can also use the following **Object or group level** option to ensure that only certain objects or groups are assigned a callout. As with **Structure of the Objects** window described in this section, objects and groups can contain nested subgroups. The first level contains all objects and groups located on the same level as the first object or the first group underneath the standard layer.

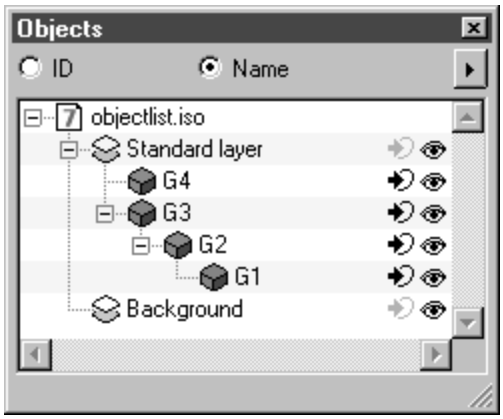

In the example, these are the objects `G4` and `G3`. The object `G2` is located on the second level and the object `G1` on the third.

Enter the required level in the entry field, in accordance with the entry made previously.

The pop-up menu allows you to select one of three settings.

When you select **all levels**, all objects and groups will receive a callout in accordance with the setting made under **Create callout**. The **up to this level** setting records all objects and groups located on the level entered and the levels above this. If you only want callouts for objects and groups on one level on the drawing, select **only this level**. You can use this setting to create callouts successively on different levels.

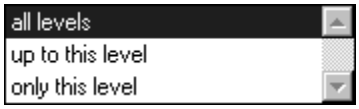

If you select **Only visible objects**, a callout is only created for those objects or groups that are currently visible. Visible objects or groups are designated by the presence of the eye symbol in the **Objects** window. If objects or groups are invisible, you will see a closed eye symbol next to them.

Callouts

For **Callout style**, select one of the styles offered. All the same styles are displayed as those in the list in the **Callouts** window.

You can also create the callout entry from the associated ID or name by selecting **Text created from** for objects. This selection is only available if the required callout style does not use a scheme.

The entry under **Gap between extent and callouts** defines at what distance from the extent of the drawing each of the callouts (text entries) is located. The extent of the drawing is a theoretical rectangle into which the drawing fits snugly. If you are creating callouts successively for different levels, you should enter different distances here because the callouts may lie on top of each other if the same distance is entered.

Min. gap between callouts allows you to specify the uniform distance between the text entries for the callouts. This ensures that even entries of different lengths are far enough apart.

Sort callouts allows you to set the order in which the callouts are to be assigned for the objects. If you select **no sorting**, the callouts are assigned in accordance with the list in the **Objects** window. With the settings **clockwise** and **counter-clockwise**, the callout is numbered continuously in the selected direction. If the callouts are generated from a list, the sort setting cannot be selected.

If you have assigned a direction, you can still define the position of the first callout via the **start angle**. The starting position for the angle is the 3 o’clock position.

Objects on Illustration

Objects with a callout are defined uniquely. Sometimes, you have even used the name from the object info for the callout entry. If you use a spare part drawing with callouts for an electronic spare parts catalog, the callout entry is usually used as a link to the spare parts list. If object information is no longer needed for this or any other reasons, you can use the **On object with callout** option to remove hotspots and delete object info.

For objects for which no callouts have been assigned, you can also select **Remove hotspot** and **Delete object info** under **On other objects**.

Show Rulers

You can use menu command **Show rulers** to show or deactivate the rulers. The rulers are hidden when Arbortext IsoDraw is started. When you invoke the **Rulers** command in the **Window** menu, the rulers are shown on the left-hand side and at the top of the window. Invoking the command again hides the rulers again.

Particularly when drawing in a flat view, the rulers provide help with positioning and defining the extents of elements.

Ruler Markings

The ruler markings depend on the enlargement factor set for the drawing area. When you change the enlargement, the ruler markings are changed accordingly. The greater the enlargement selected, the more detailed the marking lines and the dimension values appear.

The dimensions on the vertical ruler are shown under the longer marking lines. On the horizontal ruler, they are shown to the right of the marking lines. The dimensions underneath/to the left of the zero point have a - in front of the value.

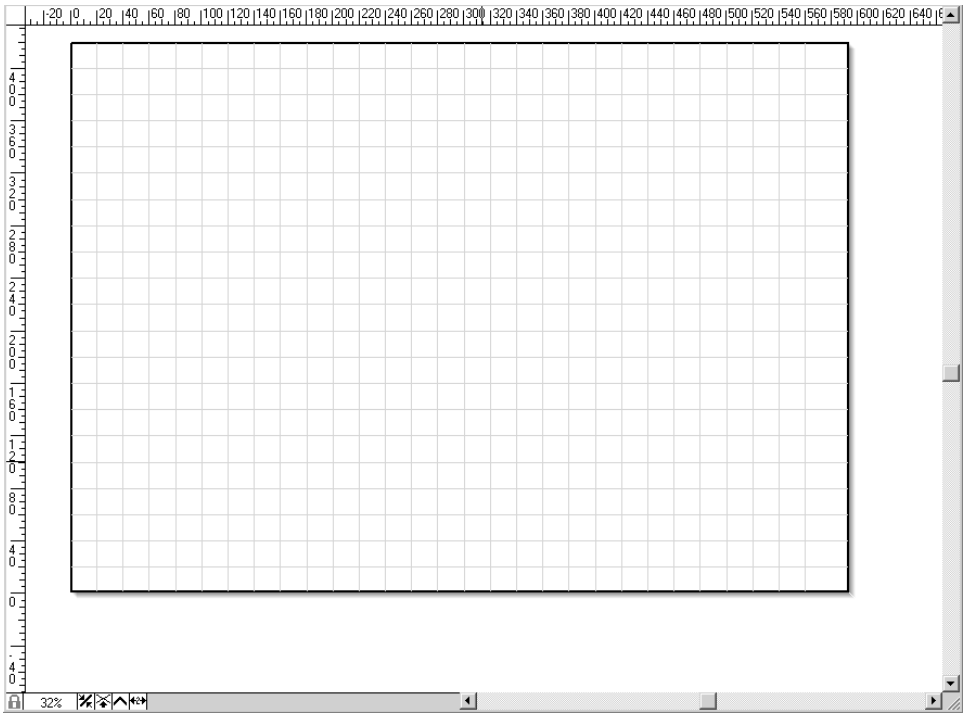

The unit of measurement (mm, inch, point) in which the dimensions are shown depends on the setting on the **Drawing** preferences panel. You can change the unit of measurement at any time. When the rulers are visible, the dimensions are shown directly in the unit that has just been set.

Zero Point of the Rulers

The zero point, i.e. the position at which the zero dimension intersects on the horizontal and vertical rulers, is located in the bottom left-hand corner of the drawing sheet.

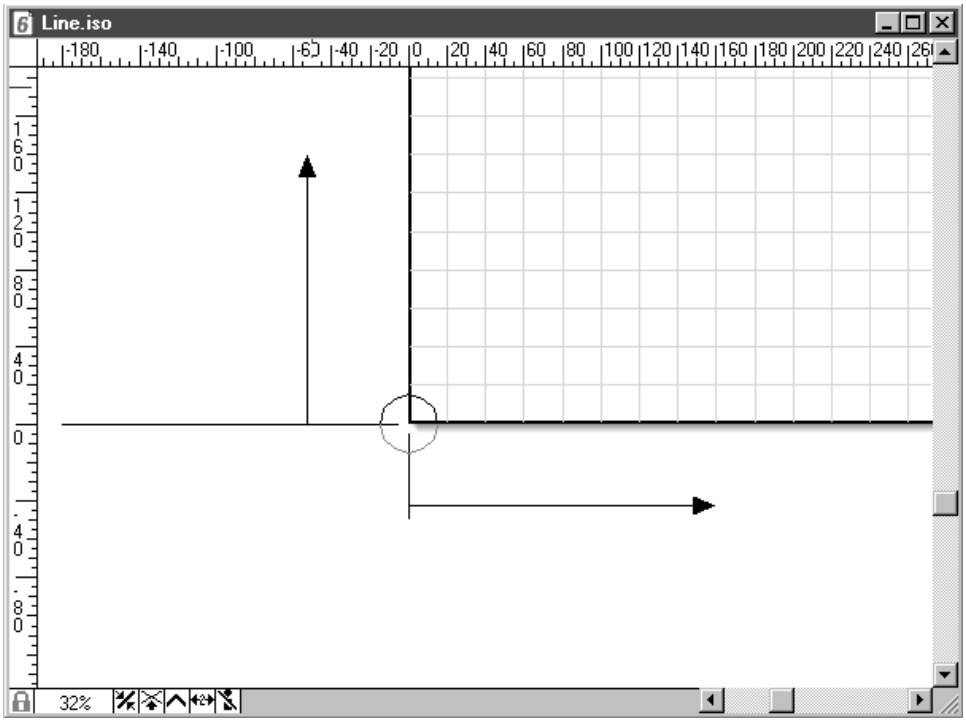

Show Library

You can use menu command **Show library** to show or deactivate the **Library** window. The **Library** window is hidden when Arbortext IsoDraw is started. Calling up command **Show library** in the **Window** menu opens the **Library** window. It is closed again by launching the command again or by clicking the **Close** button in the window.

With the functions in the **Library** window you can take a suitable part from the library and integrate it into a drawing in the right orientation, all at the touch of a button. Depending on the list selection, the parts may be adapted to the grid or used in the required size and orientation.

It is very straightforward to add your own library parts to the library.

Structure of the Library Window

Select command **Show library**. The **Library** window appears:

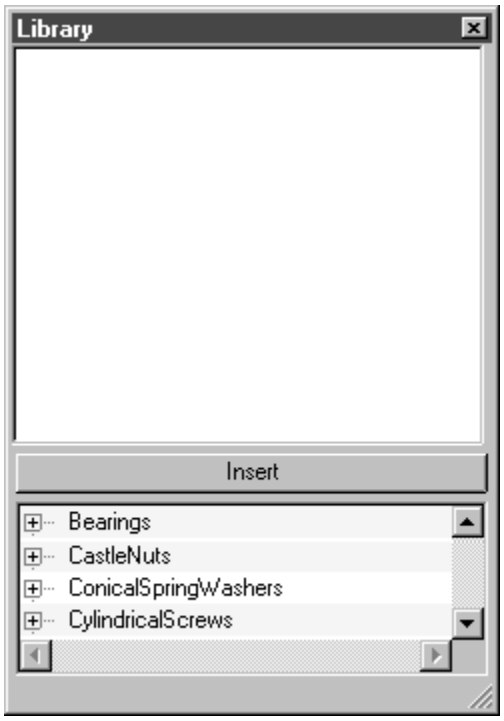

When the window opens, the display field at the top is empty. The list with the names of the library folders, library files and library parts appears at the bottom. A **+** symbol is displayed in front of the folder and file names indicating further subfolders or files. Clicking on the **+** symbol reveals the names of the subfolders, files or library parts. The presence of the **+** symbol in front of the name indicates the presence of other nested files or folders in the hierarchy.

If you hold down the CTRL key when clicking on the **+** symbol in front of a folder name, all nested folders, files and library parts under that symbol become immediately open and visible. One click on the **+** symbol turns it into a **–** symbol. Clicking the **-** symbol in front of an open folder closes this folder or the whole substructure of the folder.

At the start of the list is the entry **Favorites**. The names of all the library parts used are stored here. You can then also select frequently used parts from the favorites list. If library parts have been included a **+** symbol appears in front of **Favorites**.

The Favorites list is not saved when the program is exited.

Structure of the Library List

The names of the library parts form the lowest level of the structure. You can easily recognize this level from its name. The name is an amalgam of the name of the associated file and entry for the ellipse value. The ellipse value indicates the degree to which the drawing of the library part is tilted with respect to the imaging plane. This makes it easy to select the correct viewport to fit your drawing.

Arbortext IsoDraw creates the library parts from the file automatically. The parts appear in the list as a group of the associated file. If a library drawing contains circles and/or ellipses for which Arbortext IsoDraw can detect the ellipse value, then this angle value is appended to the name. Drawings for which Arbortext IsoDraw has not detected an ellipse value have `90` added to them.

You can obtain further information on how to create library parts in Creating your own Library Parts on page 446.

The further structure of the files and folders depends on how many similar parts (e. g. screws) belong under a particular heading.

The cylindrical screws in the list provide a good illustration of a structure. When you click on the `CylindricalScrews` folder, a number of files appear. At the next level you see the library part under each of these files in different viewports. All these viewports (groups) are grouped representations of a library part from the associated file. The appropriate viewport can be easily selected by entering the ellipse value.

The names of the files each begin with their standard name for the screw type followed by the viewport add-on:

- `B` for `Bottom`, which means that the part is shown from below
- `T` for `Top` which indicates that the part in the viewport is drawn from above.

Many files with a view from above are also available in the simple version. In this version, the cylindrical screw is represented in simplified form.

Inserting a Library Part

Inserting with Direct Selection

If you want to insert a library part with a particular ellipse value into your drawing, select the name with the required ellipse value. The part is shown in the display window.

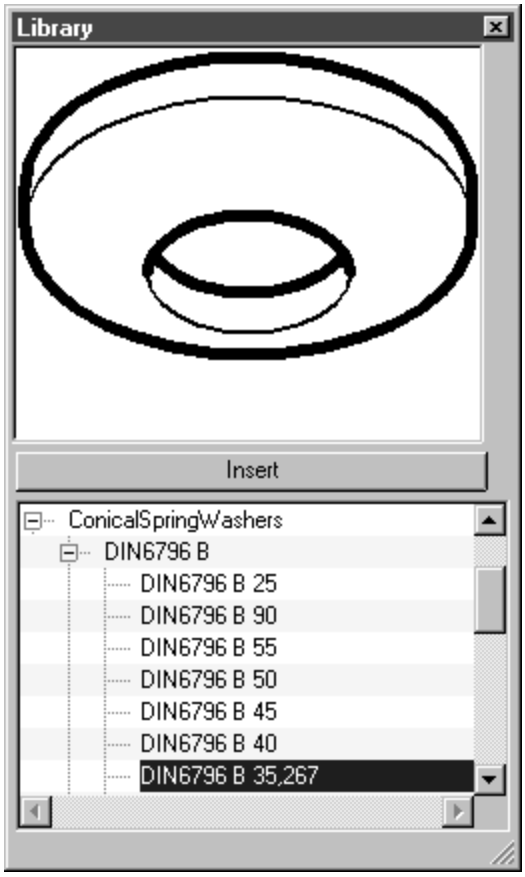

If you now click on **Insert**, the library part is inserted into the drawing sheet in its original size. The part is grouped and selected. You can now edit the part so that it is the right size and orientation on your drawing.

Automatically Inserting in Alignment with the Grid

If you select the file in which the viewport is located instead of the viewport (group) of the library part, the part with the correct ellipse value relative to the vertical axis of the current grid is inserted.

Automatically Inserting with Pre-specified Orientation and Size

With the help of a selected ellipse on your drawing, you can insert a library part with the correct orientation and size. Select the ellipse relative to which the part is to be inserted into your drawing. If there is no suitable ellipse in your drawing, draw an auxiliary ellipse with the required orientation and size.

Then, instead of a library part with an ellipse value, select the superordinate file.

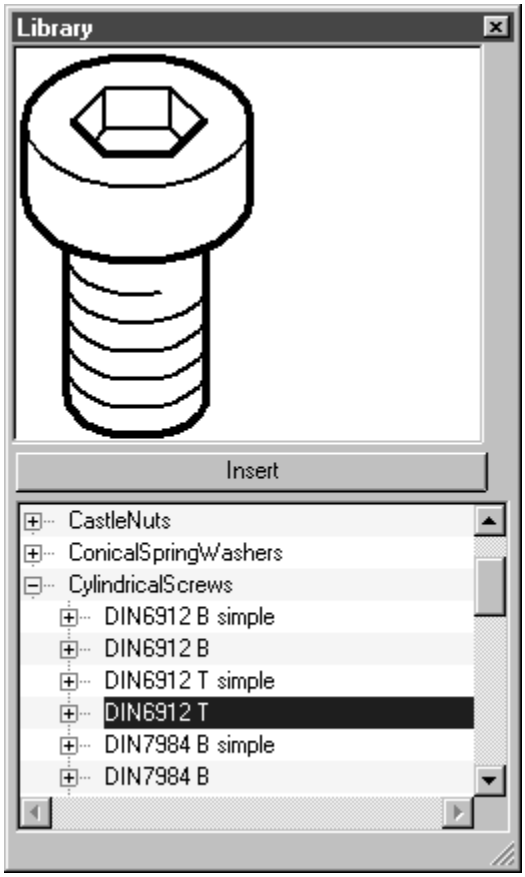

If you now click on **Insert**, the library part is inserted into the drawing exactly over the ellipse. The part is grouped and selected.

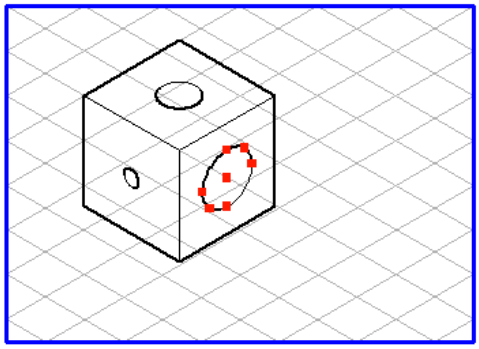

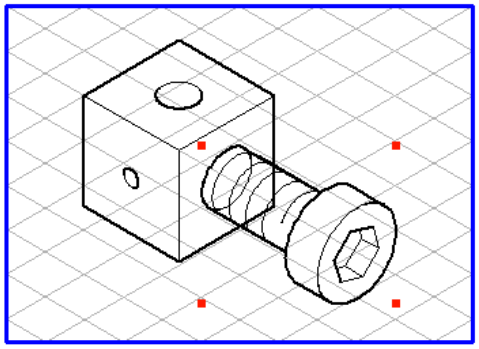

You now only need to move the part to the required position.

When the ellipses are drawn for the three perspective major axes, library parts can be inserted automatically and in succession relative to the planes, in a size that fits the size of the ellipse.

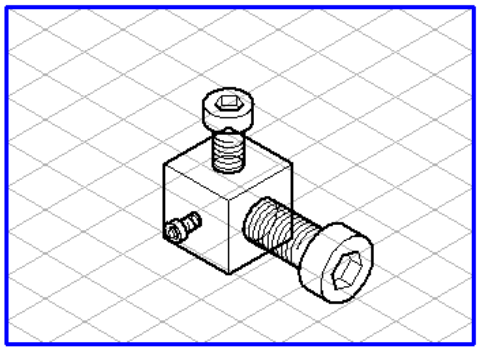

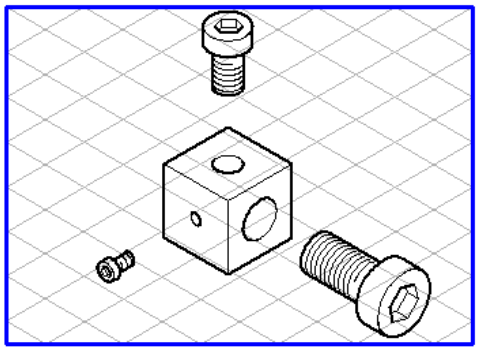

Note

If no library part with the required ellipse value is available for the current grid, then, when automatic insertion is used, the first `Group` *(viewport of the part) from the list is inserted.*

The orientation in which a library part is inserted in the selected ellipse depends on the direction in which the ellipse was dragged from the start point. For a horizontally dragged ellipse, the orientation angle can be either 0° or 180°. The

library part is inserted accordingly in two different orientations. You can find more information on the subject of orientation angles in Ellipse on page 502, Inner Thread on page 525, and Outer Thread on page 532.

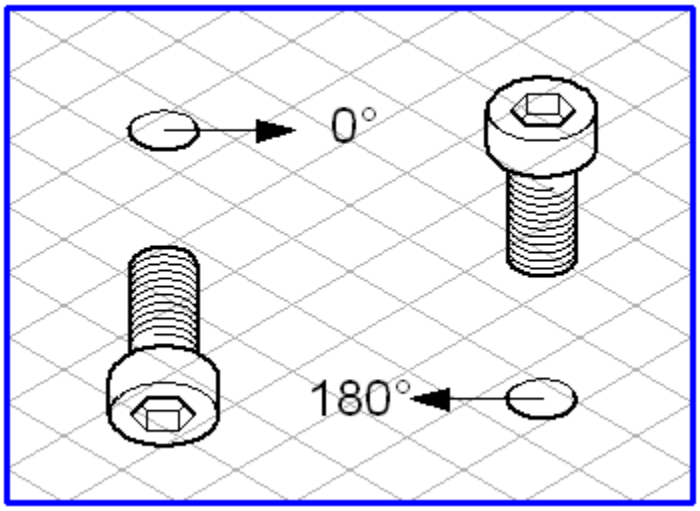

Creating your own Library Parts

You must save additional files with library parts in the `Program` folder or the `PTC` folder in the `Library window` folder.

A few rules must be observed when creating library parts to ensure that the parts can be inserted via the **Library** window:

Files with library parts must be saved in Arbortext IsoDraw or CGM format.

Every drawing of a library part must be grouped. The drawing will only be recognized by Arbortext IsoDraw as a `Group`.

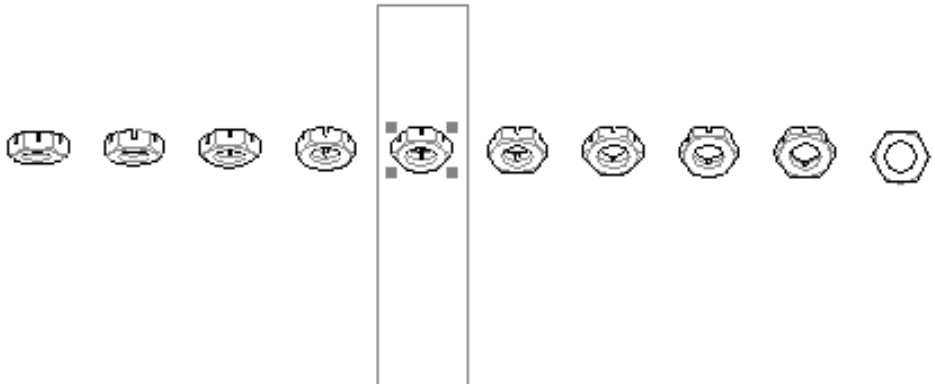

If different orientations relative to the imaging plane have been drawn for a library part, all these variants should be stored in one file. The variants (groups) appear in the **Library** window indented underneath the file that contains them in the list.

In order for Arbortext IsoDraw to identify each variant, every `Group` must contain at least one ellipse and/or circle. The ellipse value must correspond to the orientation relative to the imaging plane. The dimensions of the ellipse value then appear in the **Library** window behind the name.

Library drawings that cannot be identified by Arbortext IsoDraw using the ellipse value have `90` added behind their name. These parts cannot be inserted automatically relative to the grid or the selected ellipse by selecting the file. For this type of library drawing, use direct selection to insert.

When creating library drawings, consider in which orientation you are mostly going to use the parts. Only if you want to use library parts outside the isometric axes should you create additional orientation drawings relative to the imaging plane.

If you have many library parts of one type (e.g. pneumatic parts), you should create a unique folder hierarchy and unique names for the files. This makes it easy to find parts in the **Library** window. It also makes it easy to remove subject folders from or add them to the `Library window` folder relating to the program.

Note

Only store the library files that you need for your current work in the `Library window` folder. Otherwise, unused library files have to be loaded unnecessarily when the program is started and managed while it is running.

*You can add files to the folder at any time. After restarting Arbortext IsoDraw, all current files from the folder are included in the **Library** window list.*

Toolbars

Selecting menu command **Toolbars** in the **Window** menu allows you to make a toolbar visible in the working window, create a new toolbar or edit an existing toolbar. A customized toolbar can be compiled in the edit dialog boxes. It can include menu commands, macros and plugins.

When you have finished compiling the commands for a toolbar, this toolbar appears in the working window.

You can call up several toolbars at the same time. Each toolbar can be placed in any position along one of the four window edges.

Editing Toolbars

To edit a toolbar, select command **Toolbars**. When you select the command, the following dialog box appears:

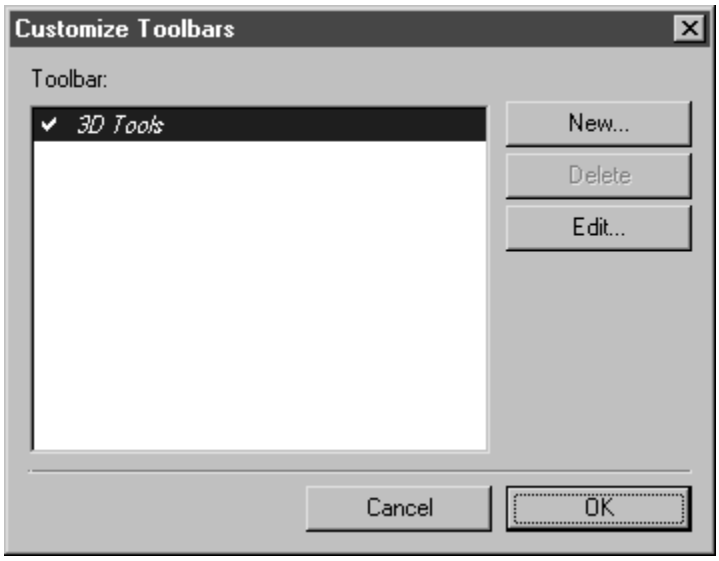

Here, you can decide whether you want to create a new toolbar or edit an existing one. Clicking on the **Delete** key deletes the toolbar previously selected.

Only when a check mark is placed in front of the name of a toolbar does this toolbar become visible in the working window. When you click on the check mark, it disappears. The toolbar it refers to is then no longer visible in the working window.

Commands for Editing Toolbars

The other dialog boxes for options **New** and **Edit** have a similar structure. There is just one difference. If you select **New**, an empty entry field appears for the name in the subsequent dialog box. If you select **Edit**, the name of the selected toolbar is entered in the entry field. The description which follows applies to both options.

Creating a New Toolbar

Click on the **New** button in the dialog box. A further dialog box appears:

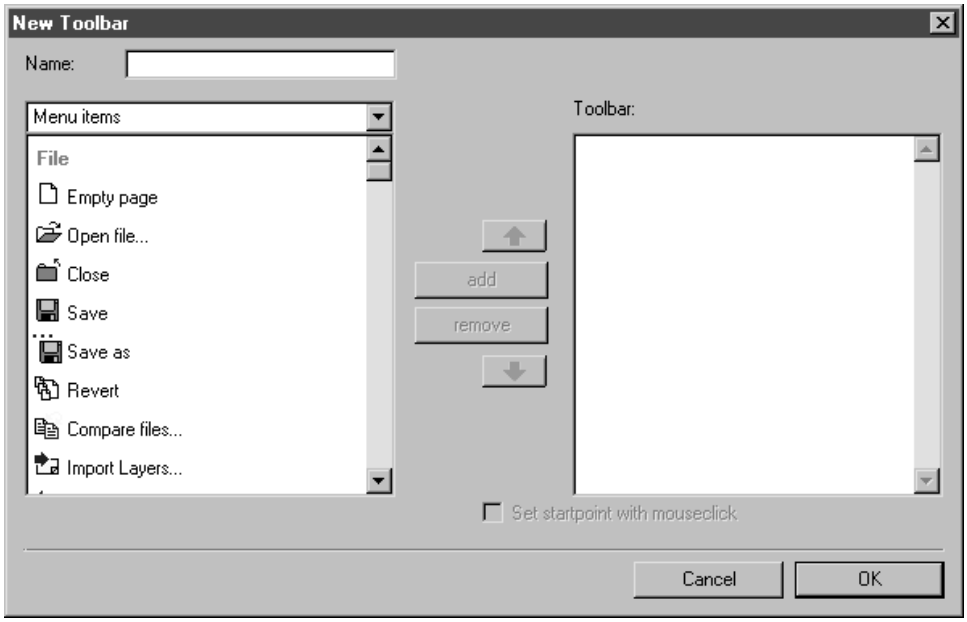

Here you can define which commands, macros or plugins are to be included in the toolbar.

Name

Each toolbar must have an unambiguous name.

Above the field where the commands are displayed, you can choose between menu commands, macros and plugins using the pop-up menu. The menu commands are defaulted.

When **Menu items** is selected, the display field will show a comprehensive list of menu commands with a preceding tool icon. To adopt a command into the toolbar as a button, click on the command entry. The entry is highlighted. Click on **add** to adopt the command into the list of buttons on the toolbar.

While compiling a toolbar, you can change between the three command groups menu commands, macros and plugins at any time.

When you set **Macros** in the pop-up menu, a list of all the loaded macros appears (see Macros on page 460). No tool icon is displayed in front of macro names. Click on a macro name from the list to select it for the toolbar. A further dialog box appears:

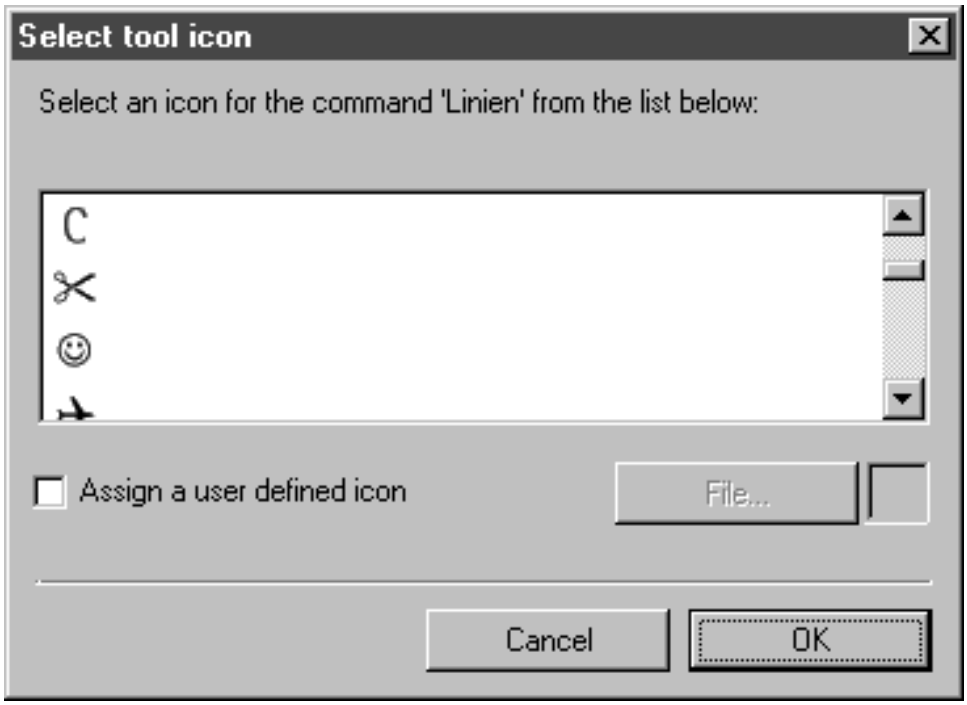

This dialog box asks you to select a tool icon for the macro name. Click on the required tool icon, followed by **OK**. The name appears with the selected tool icon in the list of buttons on the toolbar.

You can also use your own tool icons. These tool icons must be saved in TIFF or JPEG formats.

If you have a collection of your own tool icons available, click on the check box next to **Assign a user-defined icon**. When you have selected **File**, the next dialog box asks you to find the file with the tool icon. Select the tool icon and exit the dialog box with **Open**. A preview of the tool icon appears next to **File**.

If you close the dialog box with **Cancel**, the name of the macro will appear without a tool icon in the list of buttons. The tool icon field appears gray in the finished toolbar. When a tool icon button is grayed out, you can only identify which command is assigned to this button via the tooltip. You should therefore assign a tool icon to every macro command.

When you have loaded plugins, you can use the **plugins** option to transfer the menu commands of these plugins to the buttons list in the same way as the macros.

For all the entries in the list, you can change the tool icon subsequently or select a new tool icon. Double-clicking on an entry in the list opens the same dialog box as described above. Select a new tool icon and click **OK**. When you close the dialog box with **Cancel**, the entry remains entirely unchanged.

Toolbar

All the selected commands are shown in a list. You can add new entries at any time. If you want to remove the entry for a button, select it and click **Remove**. The entry is deleted.

If you want to arrange the buttons in a different way, use the two arrow buttons. Select the entry you want to move. If you click on the arrow pointing upwards, the entry will be moved up one position in the list. With the arrow pointing downwards, the entry is moved down one position. You can click an arrow button several times in succession. This allows you to move an entry e.g. from further down in the list to the top of the list.

The order of the entries in the window from top to bottom corresponds to the order of the buttons on the toolbar from left to right.

The **Set startpoint with mouseclick** option is only available for macro entries. If you have created a macro to shorten identical drawing processes, it can be helpful if the macro is started at a particular position on the drawing. Select the macro entry to which you would like to assign this option. Click the box next to the option. A check mark appears. If you click on the button for this entry in the toolbar later on, a tool icon appears next to the arrow cursor. The macro is run as soon as you click with the mouse on the required position on the drawing area (see More Macros on page 465).

If you close the dialog box with **Cancel**, none of your changes will be applied. Clicking **OK** adopts all changes. In both cases you are returned to the starting dialog box **Customize Toolbars**.

When you click on **OK** here, the new toolbar appears in the drawing area. An existing toolbar is displayed with the changes.

Toolbars in the Working Window

When you select a toolbar in the **Customize Toolbars** dialog box, this toolbar appears in the working window.

To allow you to work freely with a full-screen window on the drawing sheet, you have the option of moving a toolbar to any of the four sides around the edge of the window. The toolbar snaps into position. To move the toolbar up to the edge, click outside the buttons on the toolbar. Holding down the mouse button, move the toolbar to one of the edges. When the gray toolbar frame becomes narrower, release the mouse button. The toolbar is fitted along the window edge. When the toolbar is being positioned against the window edge, it appears with a move handle and the title bar with the name and **Close** button disappears.

You can also move the toolbar within the edge area and move it back to the working area at any time. Use the move handle to move the toolbar.

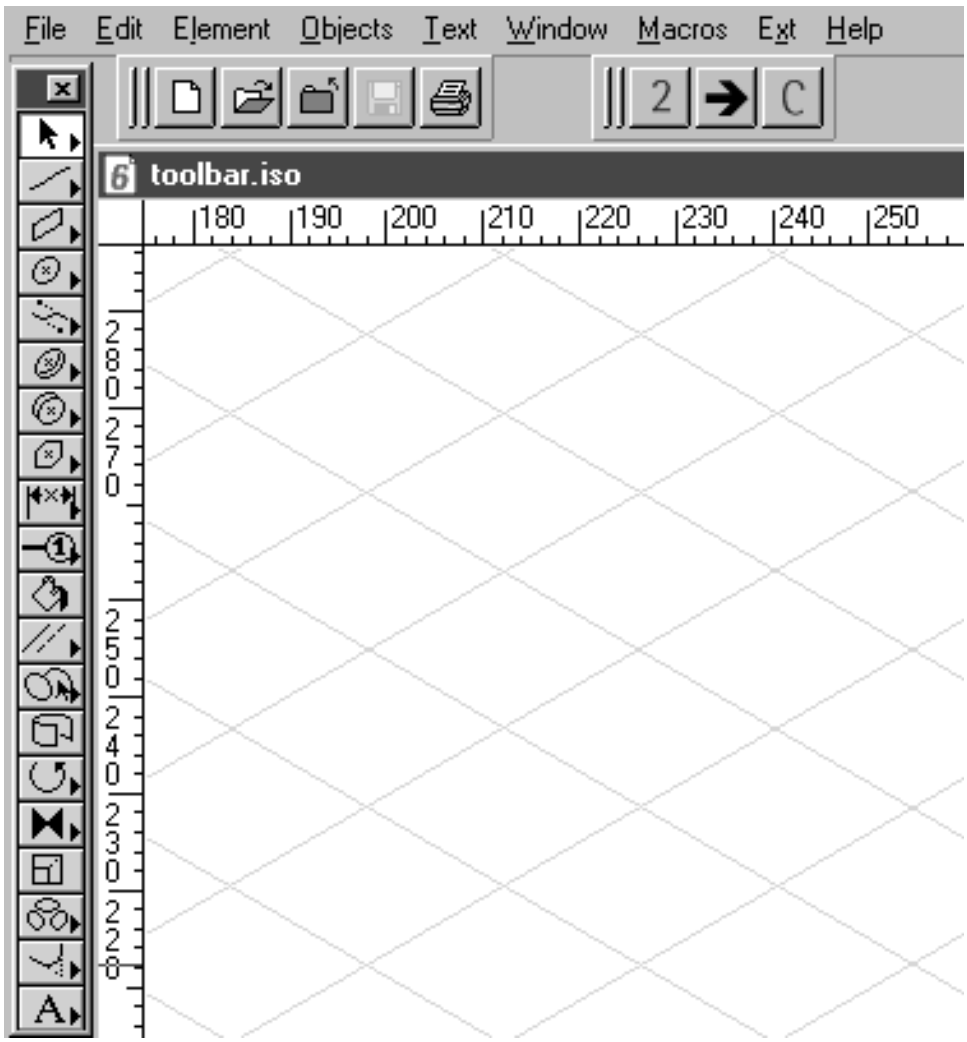

When you have created multiple toolbars, you can enable these toolbars together and position them anywhere around the edge of the window. You can arrange them next to or under each other or place them on different sides of the window.

When you select the **Toolbars** command and deactivate a toolbar (no check mark in front of the name), the toolbar disappears from the window.

To execute a command via the toolbar, simply click on the button that corresponds to the command. The command will then be executed.

As well as using the tool icons on the buttons, you can also identify the command assigned to the buttons using the tooltips.

Projection

When the menu command **Projection** is selected, a pop-up menu appears with projection options. You can use these options in 3D mode to change the orientation of elements in space. Selecting a projection allows you to define the direction and distance from which you wish to view the elements.

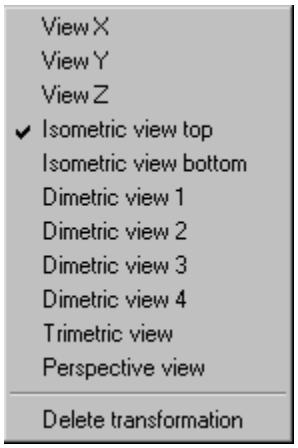

Note

While working in 2D mode, the command is grayed out and cannot be selected.

You can utilize projections in 3D mode when importing or pasting a 3D file.

If you are working with the ***Rotational surfaces*** *and* ***Extrusion*** *tools, you can use all the projections apart from* ***Perspective view****.*

The different types of projection are described below. The figures show a simple object in the described orientation. To simplify matters, the hidden lines are depicted as in **HLR** display mode.

View X, View Y, View Z

If one of these views is selected in the pop-up menu, the elements will be displayed from the precise perspective of the axis in question. If the elements have not been rotated, this will give you the front view, side view and top view.

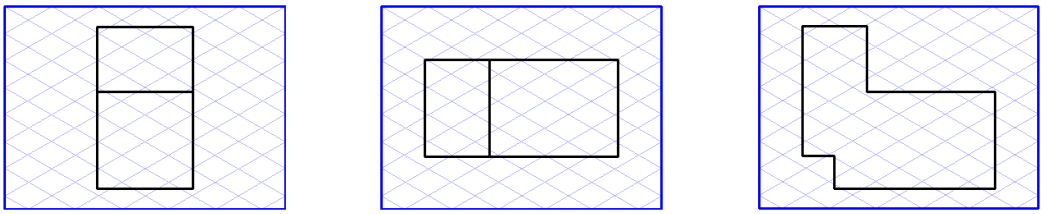

Isometric Projection Top, Isometric Projection Bottom

All elements are displayed in isometric projection. All the dimensions are shown with perspective reduction. The difference between the two variants lies in the fact that you are looking onto the elements from above in the first case and from below in the second.

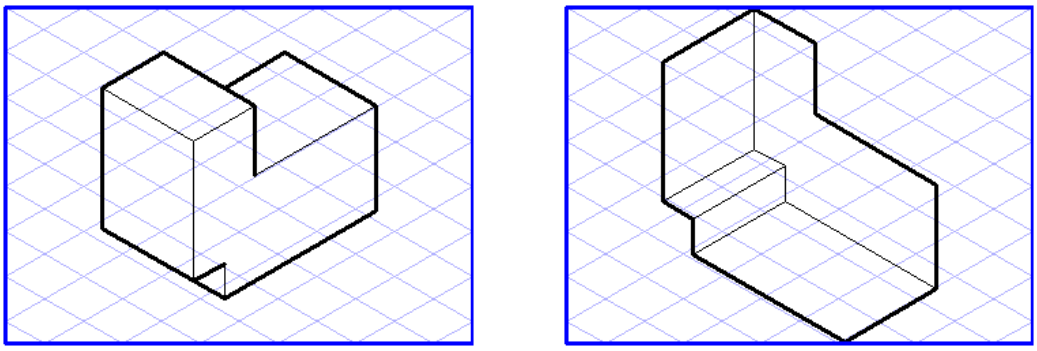

Dimetric Projections 1 to 4

The dimetric projections display the elements so that the major axes are imaged at angles of 7° and 42°. In the case of variants 1 and 2, you are looking onto the elements from above and in the case of variants 3 and 4 you are looking from below. The perspective reduction on the axis shown at an angle of 42° is 50%.

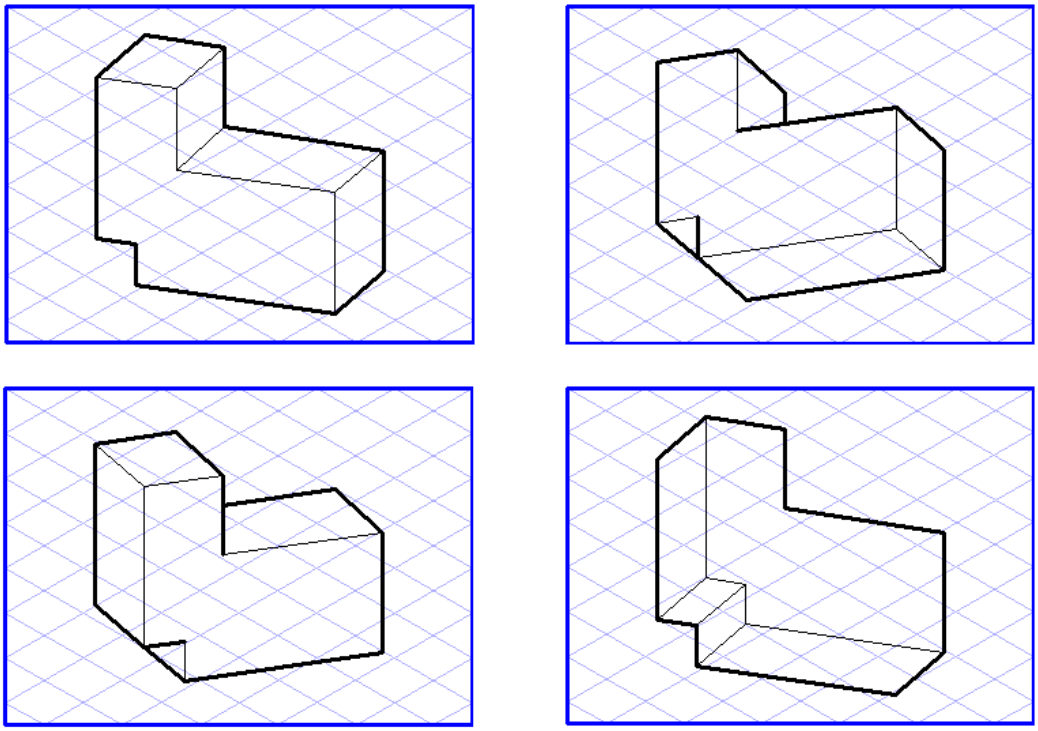

Trimetric Projection

Trimetric projection is the most general of all parallel projections. It shows the elements from the perspective of the Z-axis. Rotating the elements allows you to generate the orientation you want. All dimensions are subject to perspective reduction.

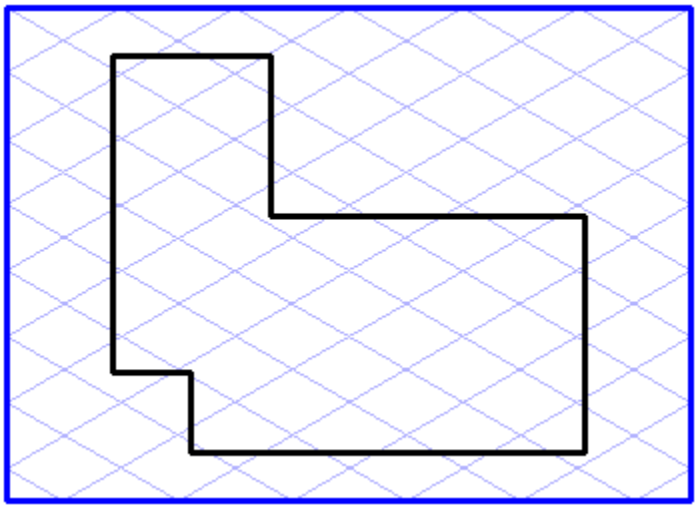

Perspective

Select the **Perspectives** projection to display all elements in a central perspective from the perspective of the Z-axis. Rotating around one of the axes creates a 2-point perspective, while rotating around two or more axes creates a 3-point perspective.

The distance from the observer to the object plays an important role with regard to perspective. Distance has a considerable influence on the perspective distortion of the elements. If it is small, the distortion is very large, if it is large, the distortion is small, i.e. parallel lines remain more or less parallel.

The figure on the left shows the object at a distance of 150 mm from the coordinate system origin, the one on the right shows the same object at a distance of 500 mm.

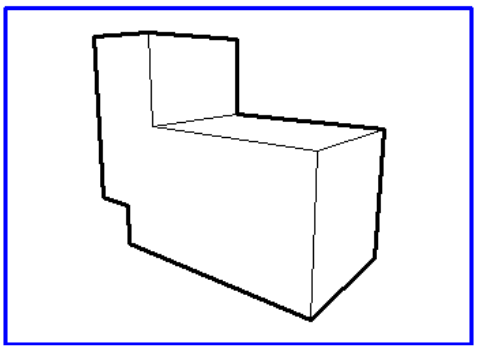

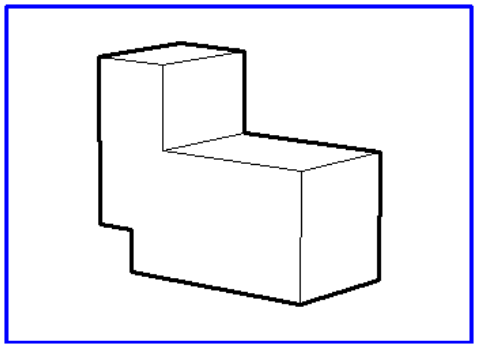

Note

Select a distance that is somewhat larger, since strong perspective distortions look unnatural.

If you want to work with **Perspective** projection, you should add the **3D Perspective distance** tool to the toolbar. This is the only way to influence distance. A description of how you can add items to the toolbar can be found in Toolbars on page 447.

When **Perspective** projection is selected, the **3D Perspective distance** tool in the toolbar becomes active. After selecting the tool, enter the distance in the dialog box.

Delete Transformation

This command in the pop-up menu allows you to undo various transformation operations. All elements are depicted in their original orientation again.

Display

Applies to Arbortext IsoDraw CADprocess only.

When the menu command **Display** is selected, a pop-up menu appears with display options. Each of these options depicts the drawing in a different mode when in 3D mode. As you can alter the display mode at any point, you should set the mode which is most suitable for the work you are currently doing.

You can also select the desired display mode using the standard toolbar (3D tools).

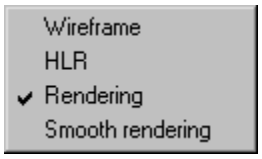

Note

While working in 2D mode, the command is grayed out and cannot be selected.

*If you are working with the **Rotational surfaces** and **Extrusion** tools and switch to 3D mode, you can use **Wireframe** and **HLR** display modes.*

Wireframe

The **Wireframe** option is used to display all the elements in the 3D file. This display mode is suitable if a drawing only contains a few objects.

HLR

If you select the **HLR** option, all the elements which are invisible to the observer because of the particular perspective and orientation will be removed. This function is very useful while working on a drawing in that it provides an overview of how the illustration will look later. The display is simpler than that of the subsequent 2D illustration in order to save time.

Rendering

If the loaded 3D data contains surfaces or solids, all the surfaces that have been created are depicted with color rendering when the **Rendering** option is selected. The light source is set by default.

If colors have been defined in the 3D data, these are adopted. If no colors have been created, a standard color is used for the contour. You can assign a new color to selected areas of the drawing via the **Fills** window.

Selecting this display mode gives you a good overview of individual parts, especially in the case of extensive assembly units. As it is just as fast to edit the drawing in this display mode as in **Wireframe** mode, you should opt for colored depiction of the drawing.

Smooth Rendering

Converting your drawing to **Smooth rendering** display mode also displays the drawing with color rendering. However, it has a smoother appearance than in **Rendering** mode. The grading of the rendering is smoothed and the transitions between pixels are softened. The difference is particularly noticeable on curved surfaces. This smoothing is achieved through interpolation. You can set the degree of smoothing by adjusting the smoothing angle value in the **3D Options** preferences dialog box.

The **Rendering** display mode is normally sufficient for working in 3D mode. **Smooth rendering** is particularly recommended if the drawing is to be exported from 3D mode into a raster format. When exporting, the information of the drawing's current display setting is used.

Note

*Both **Rendering** and **Smooth rendering** display modes can only be used with imported and placed 3D files. When using the tools **Rotational surfaces** and **Advanced tools, ▸ Extrusion tool** in 3D mode, neither of these display modes can be selected.*

File Display

All the files which you have opened during a session but have not yet closed are displayed at the bottom of the **Window** menu.

Select the required file in order to bring the relevant window to the front and activate it.

Pressing CTRL+TAB brings the rearmost window to the front.

7

Macros Menu

Macros

A macro is a sequence of commands that can be executed by Arbortext IsoDraw . Macros are useful if you need to perform frequently recurring processes or if, for example, you always want to export your drawings with the same preferences in a particular format.

If you then also record frequently used macros in a symbol bar, this speeds up your work even more.

If you select command **Macros** from the **Macros** menu and open the pop-up menu, you then see the list of commands.

Record Macro

Selecting this command from the pop-up menu opens the following dialog box:

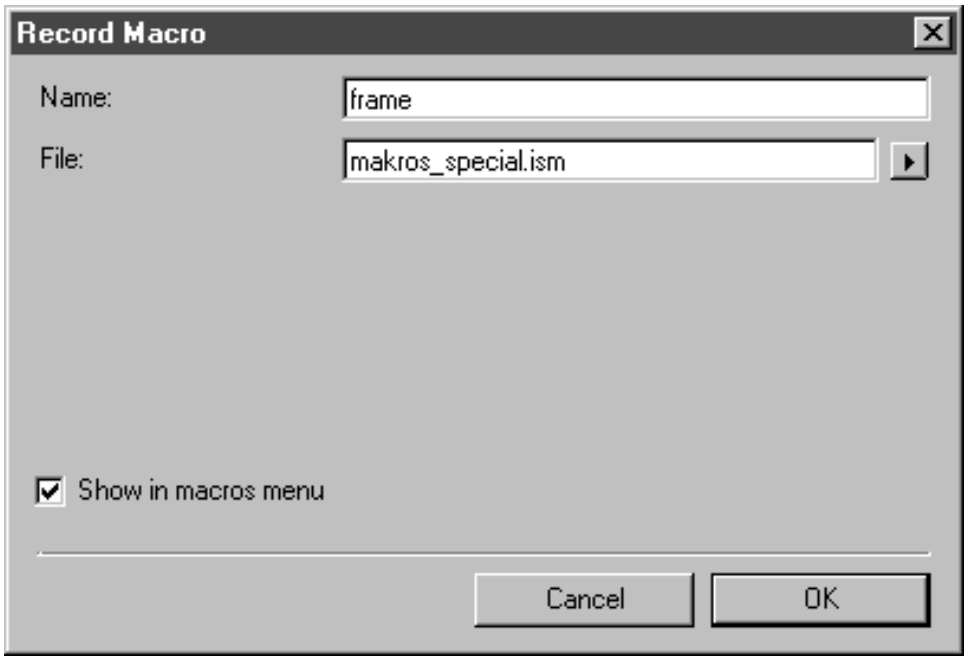

Name

In this entry field, enter the name of the macro that is to be run. Select a unique name. If the name you have entered already exists, a dialog box appears when you click **OK** asking you to assign a unique name.

If you are creating a lot of macros, ensure you assign a meaningful name.

File

In the **File** entry field, specify in which file the macro is to be saved. For this you can select one of the existing files from the list in the pop-up menu. The macros supplied with the program are stored in the existing files.

You can also define a new file name. This newly generated file is saved in the `PTC application` folder under `Documents/Settings`. The names of new files then also appear in the list of existing files in the pop-up menu.

Show in Macros Menu

When this option is selected by clicking in the check box, the completed macro appears with its name in the list of macros under the command **Macros**.

Clicking **Cancel** exits the dialog box without starting the macro. If you select **OK**, a record symbol appears to the right of the cursor.

Actions now executed in Arbortext IsoDraw are recorded in the macro. Menu commands and tools that are not macro-compatible cannot be selected in macro recording mode.

To find out which actions in Arbortext IsoDraw are macro-compatible, please refer to the *Arbortext IsoDraw Macro Language Reference*.

Pause Recording/Resume Recording

You can pause macro recording after each action. Do this by selecting the **Pause recording** command from the pop-up menu. The recording symbol next to the cursor disappears.

During the pause, you can continue working in Arbortext IsoDraw without the actions being recorded. This allows you to test, for example, whether an action should be recorded or not.

When you want to resume recording actions in the macro, select the command **Resume recording** in the pop-up menu. This command appears instead of **Pause recording** after you have paused. The recording symbol appears next to the cursor and you can continue the recording.

Stop Recording

When you have recorded all the actions for your macro, stop the macro recording using this command from the pop-up menu. The recording symbol next to the cursor disappears.

Debug Macro

Use this command to display the recorded actions of a macro. Each action can be selected and executed individually. This makes it easy to test whether all actions have been executed in the required way.

Select the command in the pop-up menu. The following dialog box appears:

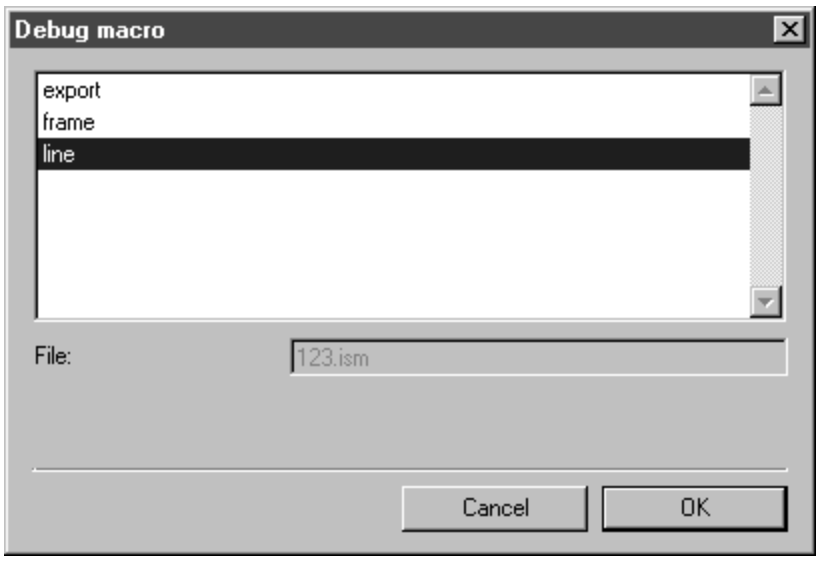

All existing macros are shown in the text field. Select the macro you want to test by clicking on the name. This macro is then selected.

File

The grayed out entry field next to **File** shows the name of the file in which the recording of the macro is saved (see also Record Macro on page 460).

If you select **OK**, a further dialog box appears.

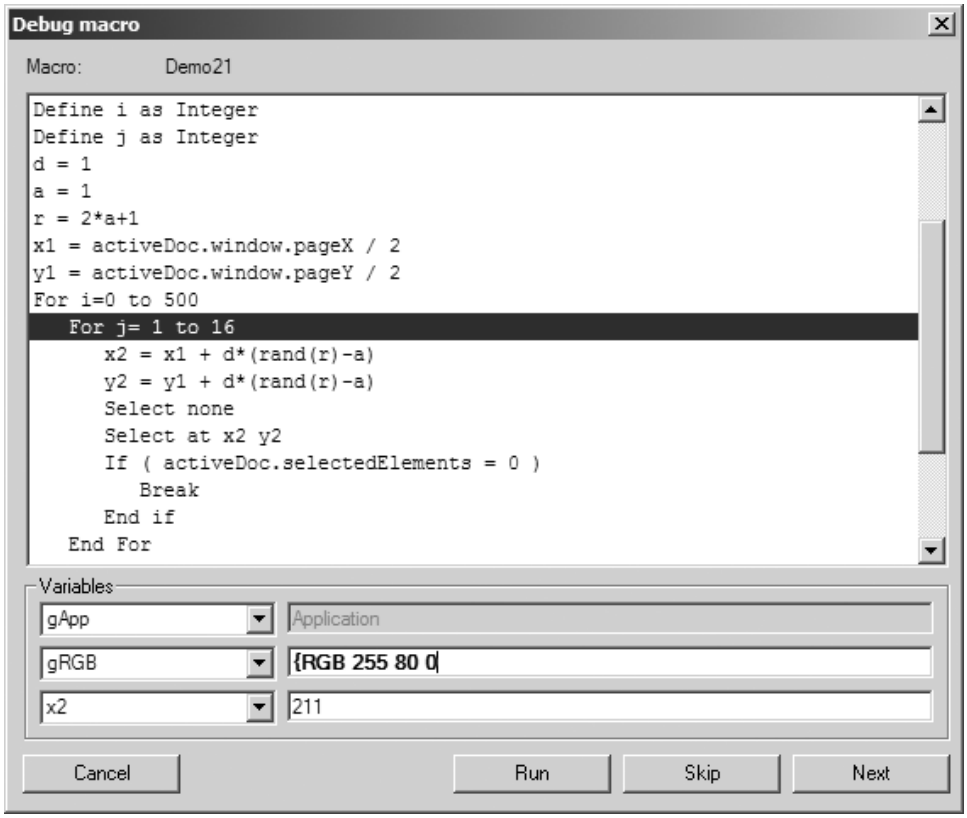

The actions of the macro are shown here line by line. The first line, i.e. the first action, is automatically selected.

Variables

This is where you can see the values of variables. Each of the three pop-up menus on the left contains the names of all the variables. Global variables appear automatically in the pop-up menu. Local variables are displayed in the menu when the action is executed.

The fields on the right display the values of the selected variables. This enables you to check the values of variables. You can also change the displayed values. You can tell if an entered value is not allowed by the bold type. If a permissible entry is not made the original value is preserved. When the value of a variable cannot be changed, its value field is grayed out.

Note

If you have changed the value of a variable, this new value is only applied to the current running of the macro. If the new value is to be used in the future, you must change the macro itself.

Running

If you select this button directly after opening the dialog box, the macro is run in its entirety and the dialog box closes automatically. For drawing actions, you will see the run result on the drawing area. If actions are skipped, only the actions from the selected line onwards are executed.

Skip

If you select this button, the selection skips to the next line in the window, i.e. to the next action. The previously selected action is not executed.

Next

When you click on this button, only the selected action is executed. The program then skips to the next line. For drawing actions, you will see the run result on the drawing area.

Cancel

Clicking on **Cancel** exits the dialog box. If you open the dialog box again, the first line, i.e. the first action, is again selected.

Removing Errors in Existing Macros

If you discover during macro debugging that the actions are not being performed as required, you have two means to put this right:

You can record the macro again. If you want to use the same name for the macro, delete the corresponding macro beforehand.

Or you can change the recorded actions. To do this, open the file in which the macro is stored. The name of the file in which the recording is located is shown against a gray background in the starting dialog box **Debug macro** under **File**.

To change the macro recordings, you must have some knowledge of the macro language. Information and examples of this are to be found in the online version of the *Arbortext IsoDraw Macro Language Reference*.

Delete Macro

Selecting this command from the pop-up menu opens the following dialog box:

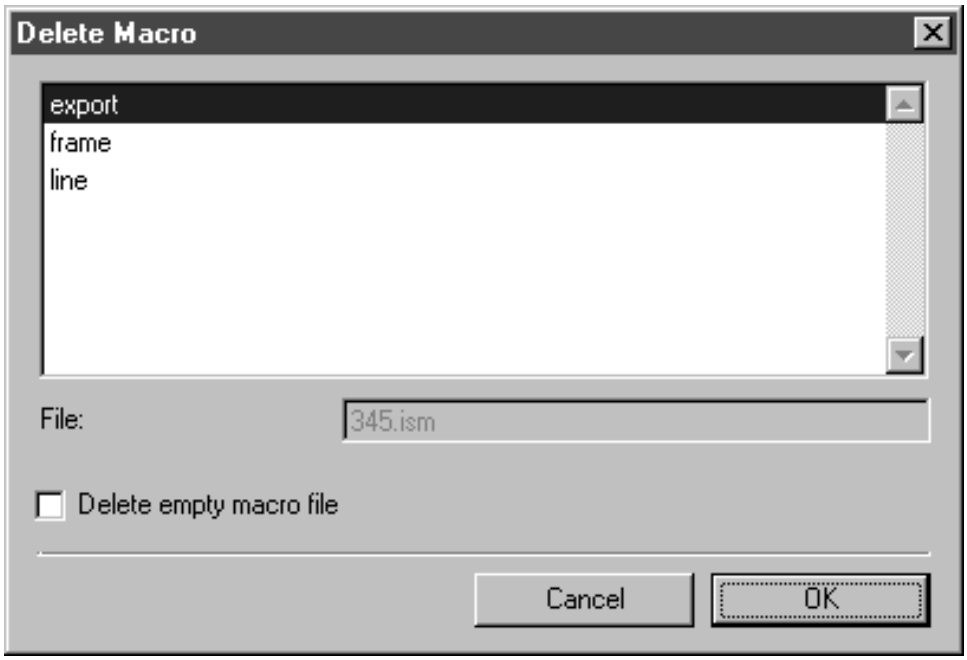

All existing macros are shown in the text field. Select the macro you want to delete by clicking on the name. This macro is then selected.

Delete Empty Macro File

When you click the check box next to this option, the file where the macro for deletion is stored is automatically deleted, provided there are no recordings of other macros in this file.

When you click on **OK**, the selected macro is deleted and no longer appears in the macro list in the **Macros** menu. This command cannot be undone.

If a deleted macro was recorded in a symbol bar prior to deletion, the symbol button assigned to it has no function when the macro has been deleted. You should remove this button from the toolbar (see Toolbars on page 447).

More Macros

All existing macros are loaded when the program starts up. This applies both to macros supplied with the program and to your own macros.

The command **more macros** displays all macros. You can select and start a macro here.

Starting a Macro Using the More Macros Command

Select the **more macros** command in the **Macros** menu. The following dialog box appears:

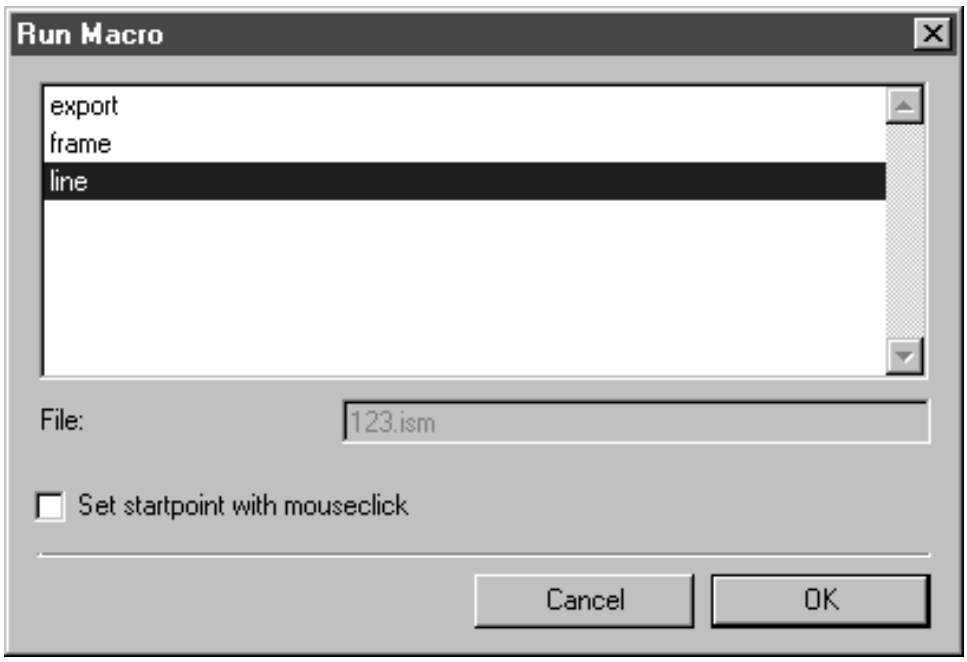

All existing macros are shown in the text field. Select the macro you want to start by clicking on the name. This macro is then selected.

Clicking **OK** starts the macro. The specified actions are executed.

File

The grayed out entry field next to **File** shows the name of the file in which the recording of the macro is saved (see also Macros on page 460).

Set Startpoint with Mouseclick

When you click the check box next to this option, the macro starts exactly at the point where the mouse is clicked. This option is suitable for drawing actions.

Clicking **OK** runs the macro. For drawing actions, the run result appears in exactly the same place as the recording of the actions took place.

Running the Macro with a Free Start Point via Mouseclick

If you have selected the option **Set startpoint with mouseclick**, the recording symbol appears to the right of the cursor when you exit the dialog box with **OK**. This means you are in macro run mode.

When you click with the mouse on the drawing area, the macro is started at this point.

When you click on the drawing area and drag while holding down the mouse button, an angle is displayed. The displayed angle skips in the direction of the mouse to the next major axis of the current grid. The macro is run as soon as the mouse button is released. The recording result is placed on the drawing sheet at the angle displayed when the mouse button was released.

If you hold down the mouse button and drag while at the same time holding down the ALT key, you can freely select the angle.

For macro drawings in flat view in particular, it is possible to change the orientation of the drawing macro that has been run using the angle that has been set.

You can also define the angle using a dialog box instead of by moving the mouse cursor. In this dialog box you can also set a scale for the macro drawing.

You are now in macro run mode again. To call up the dialog box, hold down the SHIFT key and click with the mouse on the drawing area.

The following dialog box appears:

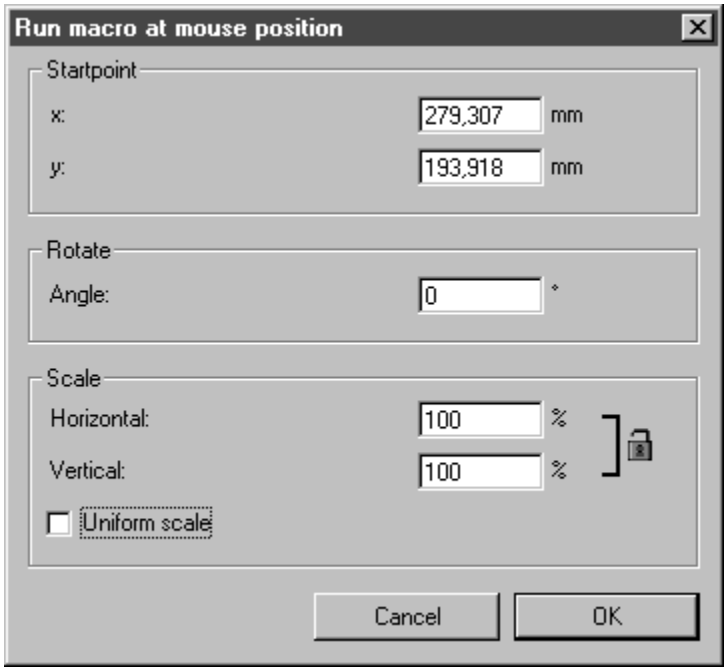

Startpoint

The dimensions for the X and Y axes relative to the current cursor position are shown here. You can define another startpoint using the entry fields.

Rotating

Here you can enter the angle – relative to the X and Y axes – around which the drawing run via the macro is to be rotated relative to the recording orientation on the drawing sheet.

Scaling

If you want to scale the drawing run via the macro proportionally, enter the required value in **%** in the entry field next to **Horizontal**.

If you want to scale the drawing run via the macro non-proportionally, deselect **Uniform scale**. To do this click on the check box beside it. The check mark disappears and the entry field next to **Vertical** which was formerly grayed out is now accessible. You can now enter different **%** values in both entry fields.

Clicking on **Cancel** exits the dialog box without running the macro. You are now once again in **Set startpoint with mouseclick** run mode for the selected macro.

Selecting **OK** runs the macro in accordance with the settings in the dialog box.

You can run a macro at different positions on the drawing sheet as often as you like in succession using a mouse click, the angle option or the dialog box. As long as the recording symbol is displayed, this means that run mode is activated.

To exit run mode, press the ESC key.

Starting a Macro from the Selection List

If you have selected the option **Show in macros menu** in the dialog box that appears when you select the **Record macro** command (see Macros on page 460), the macro is included after recording in the list of macro names under the **Macros** menu command.

Select the name for the required macro. The macro is run. For drawing actions, the run result appears in exactly the same place as the recording of the actions took place.

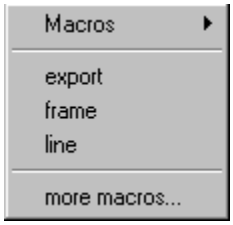

Running the Macro with a Free Start Point via Mouseclick

When starting macros from the selection list, you also have the option of defining the startpoint with a mouse click.

If you hold down the SHIFT key and then select the name of the macro from the list, the cursor appears with the recording symbol. You are now in the **Set startpoint with mouseclick** run mode.

All other options for starting a macro (start with mouseclick, start with mouseclick and define angle, set a macro using the dialog box) can be applied in the same way as the method used for selecting the macro using the **more macros** command.

To exit run mode, press the ESC key.

Starting a macro via the toolbar

To run a macro, click on the symbol button. The macro is run. For drawing actions, the run result appears in exactly the same place as the recording of the actions took place.

Note

You can also start the macro – including the associated options (define angle and set via dialog box) – by clicking with the mouse on the symbol buttons, provided you have selected this option in the toolbar.

II

Palette Window Toolbox

8
Selecting

The tool at the top of the toolbox is the **Arrow cursor**. The **Arrow cursor** helps you select elements or manipulate them in various ways. There are two variations of this tool: the **Arrow cursor** for manipulating individual elements and the **Arrow cursor** for selecting an element directly from a group (both supporting the same manipulation features). Both of these can also be used in 3D mode.

Also included is a **Marker** tool. The red markers are intended as a memory aid.

Arrow Cursor Tool

When you select the **Arrow cursor** tool and point inside the drawing window, the pointer becomes an **arrow** cursor.

Note

*If another tool is already selected, you can switch the pointer to an **arrow** cursor temporarily by pressing the CTRL key. The previous tool is reactivated when you release the CTRL key.*

Selecting

If you want to edit elements, you must select them first. You do this by clicking the element with the **arrow** cursor. Selected elements are displayed with their element points. When you select the element, various dimensions will appear in the dimensions bar depending on the element type. You can change these values directly in this bar.

If an illustration contains elements with filled areas, you can click anywhere within the area to select the element. If you want to use this selection option, choose **Edit ▸ Preferences**, then click the **Grid** symbol in the left panel to open the **Grid** preferences panel. On the **Grid** preferences panel, select **Click on fill selects object**.

You can select several elements by clicking them one after the other while holding down the SHIFT key. Clicking a selected element while holding down the SHIFT key has the effect of canceling the selection. When selecting several elements of the same type, the dimensions bar will only display those dimensions that are the same for all selected elements. You can change these values directly in this bar.

If you want to select several elements simultaneously, you can also use the selection rectangle. Position the **arrow** cursor on the drawing sheet outside the elements. Holding down the mouse button, you can now drag a dashed rectangle. All the elements inside this rectangle will be selected as soon as you release the mouse button. This does not apply to elements which are locked or located on locked layers.

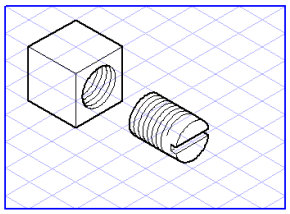

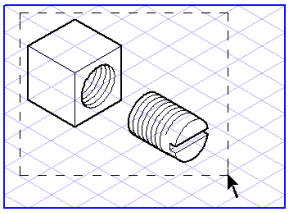

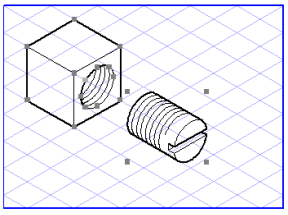

A further way to select elements is to use the **lasso** cursor. Select the **Arrow cursor** tool, point inside the drawing window, then hold down ALT and click the mouse button. The pointer changes to a **lasso** cursor. You can now lasso the objects you want to select. In principle, the **lasso** cursor functions exactly like the selection rectangle. However, it allows you to freely define the limits within which elements are to be selected. The **lasso** cursor is thus useful for selecting a number of elements which lie close to other elements which are not to be selected.

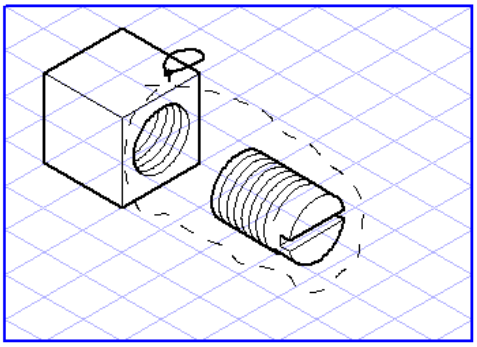

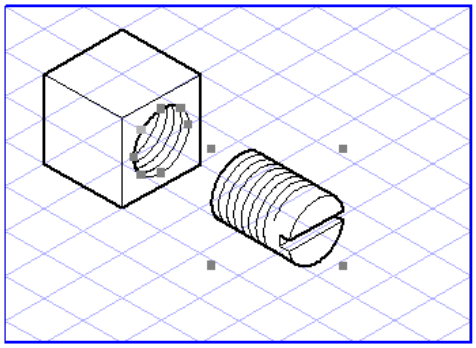

Elements can be deselected if you click the **arrow** cursor on an empty part of the drawing area or if you select another element by clicking it.

The selection rectangle/lasso selects only those elements that lie completely within the rectangle/lasso. If you also want to select elements that are only partially inside the rectangle/lasso, press the CTRL key while dragging and hold it down.

Move

Selected elements can be moved with the **Arrow cursor** tool. Move on page 103 explains how this is done.

Modification

Clicking and dragging element points with the **Arrow cursor** tool allows you to influence the orientation and extent of elements. Descriptions of the various options which you can use to make changes can be found in the sections dealing with the relevant elements.

Moving the Drawing

In addition to the scroll bar, there is one further way of moving the drawing in the working window: the **hand** cursor.

Press the SPACEBAR. The pointer changes into a **move hand** cursor. Now drag inside the drawing area in the direction in which you want to move the drawing, then release the mouse button. The drawing is moved to the new position. When you release the SPACEBAR, the tool last selected will be reactivated.

If you move the drawing in this way, it looks at first as though nothing is happening. The screen is not redrawn until you release the mouse button.

However, if you wish to see the drawing being moved, use the hand cursor to click the drawing and wait a moment before moving the mouse. The drawing is then moved directly together with the mouse.

The Arrow Cursor in 3D Mode

Applies to Arbortext IsoDraw CADprocess only.

Selecting

After selecting the **Arrow cursor** tool in the toolbar, the pointer becomes an arrow cursor.

When working with certain tools from the toolbar, it is possible to switch to the arrow cursor temporarily by pressing the CTRL key. The previous tool is restored when you release the key.

You can use the **Arrow cursor** tool to select individual assemblies or all assemblies (objects). Do this by clicking the **arrow** cursor on the part you want to select.

You can also select several parts by holding down the SHIFT key and clicking the various parts one after the other.

If your imported 3D data contains assemblies with subassemblies (assembly unit consists of several components), you have a further selection option. If you hold down the CTRL key when clicking a subassembly that has already been selected, the superordinate assembly will be selected.

If you want to select several elements simultaneously, you can also use the selection rectangle. Position the arrow cursor outside the assemblies on the drawing sheet. Holding down the mouse button, you can now drag a dashed rectangle. All assemblies located completely inside the rectangle will be selected as soon as you release the mouse button.

A further way to select elements is to use the lasso. Position the arrow cursor where you want to select assemblies. Press the ALT key and then the mouse button. The pointer becomes a lasso cursor. You can now lasso the assemblies you

want to select. The lasso is useful for selecting a number of parts that lie close to other assemblies, which are not to be selected. In order for selection to take place, the desired assemblies must be completely lassoed.

You can edit selected objects using the active tools and commands available in the menus.

Note

If you have imported a file using the ***Create object information for assemblies*** *option, assemblies can be selected more easily in the object window (see description in* *Show Object Window on page 427**).*

Assemblies can be deselected if you click the **arrow** cursor on an empty part of the window or if you select another element by clicking it.

Note

Surface elements from files without structured import cannot be selected using the ***Arrow cursor*** *tool. Use the* ***Direct selection arrow cursor*** *tool for these elements.*

Direct Selection Arrow Cursor

After selecting the **Direct selection arrow cursor** tool from the toolbox, the pointer changes to a **direct selection arrow** cursor. (The plus sign (+) distinguishes it from the normal **arrow** cursor.)

Selecting

If you want to edit elements within groups of elements, you must select them first. You do this by clicking the element in question with the direct selection arrow cursor. Selected elements are displayed with their element points. Unlike selections made with the normal arrow cursor, the elements appear only as an empty rectangle. When you select the element, various dimensions will appear in the dimensions bar depending on the element type. You can change these values directly in this bar.

If an element group contains elements with filled areas, you can click anywhere within an area to select the element. If you want to use this selection option, choose **Edit ▸ Preferences**, then click the **Grid** symbol in the left panel to open the **Grid** preferences dialog page. On the **Grid** preferences panel, select **Click on fill selects object**.

You can select several elements by clicking them one after the other while holding down the SHIFT key. Clicking a selected element while holding down the SHIFT key has the effect of canceling the selection. When selecting several elements of the same type, the dimensions bar will only display those dimensions that are the same for all selected elements. You can change these values directly in this bar.

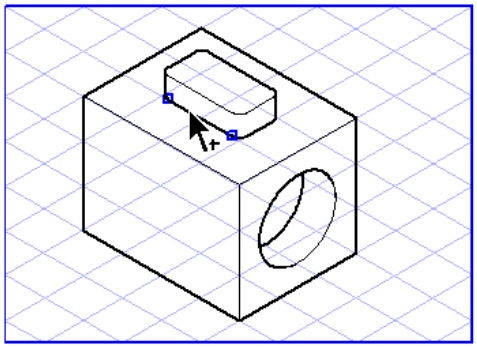

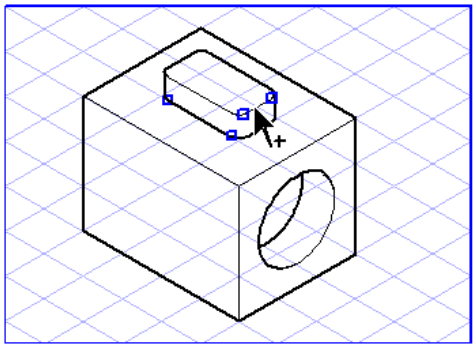

Elements can be deselected if you click the **direct selection arrow** cursor on an empty part of the drawing area or if you select another element by clicking it.

Note

Individual elements can only be selected if the element group containing the element has not been selected.

If you click a selected element while holding down the CTRL key, this selects the group containing this element. You can therefore work easily with nested groups.

Move

Selected elements can be moved with the **Direct selection arrow cursor** tool. Move on page 103 explains how this is done.

Modification

Clicking and dragging element points with the **Direct selection arrow cursor** tool allows you to influence the orientation and extent of elements. Descriptions of the various options which you can use to make changes can be found in the sections dealing with the relevant elements.

The Direct Selection Arrow Cursor in 3D mode

Applies to Arbortext IsoDraw CADprocess only.

You use the **Direct selection arrow cursor** tool in the same way as the **Arrow cursor** tool. However, unlike with the **Arrow cursor**, you can use the **Direction Selection Arrow cursor** to select objects or surfaces within an object. When you are working with a file without structured import you can select surfaces using this cursor.

Selecting

The **Direct selection arrow cursor** tool has the same selection functions as the **Arrow cursor** tool.

You can select several parts by clicking them one after the other while holding down the SHIFT key.

If you hold down the CTRL key, you can select – instead of the surface of an object – the next highest unit, i.e. the object.

If you want to select several surfaces you can also use the selection rectangle or the lasso, as with the **Arrow cursor** tool.

Note

Smaller 3D object surfaces that form a larger 3D object surface are not individually selectable—even though you can see their borders. This is because the smaller surfaces are merged into the larger surface before the 3D object is rendered.

Marker

Note

*The **Marker** tool is grayed out in 3D mode and therefore inactive.*

Description

The red markers are intended as a memory aid. They are easy to spot and allow you to easily relocate positions in the drawing which e.g. may need to be modified again.

Markers are stored with the drawing. They are ignored for printout and export.

Generation

In order to draw a marker, select the **Marker** tool from the toolbox; the pointer becomes a **marker** cursor.

Click the point in the drawing area where the marker's arrow tip is to be located. Then drag the marker as you would a line.

Markers cannot be changed with menu commands. However, they can be moved, changed in length and transformed like a line.

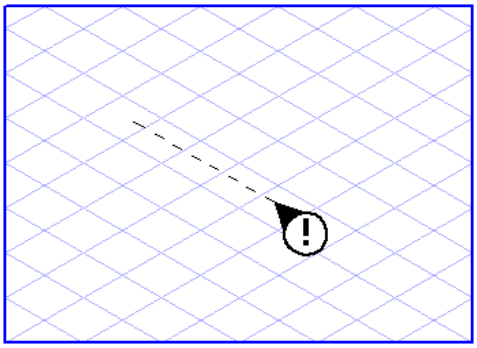

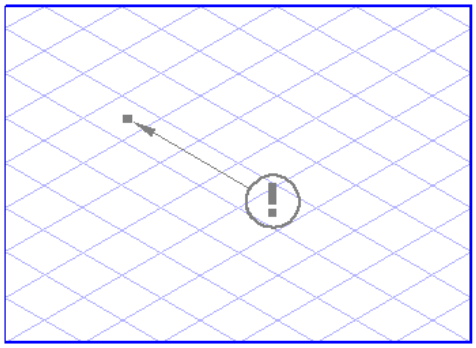

9
Elements

This section describes each geometric element in Arbortext IsoDraw and shows you how to do the following:

- Draw geometric elements using the element drawing tools in the palette window.
- Adjust preference settings that affect how elements can be drawn
- Select one or more elements—or one or more parts of an element.
- Modify geometric elements interactively or through menu commands and dialog box settings
- Split up or join geometric elements

Line

There are two different line drawing tools: the **Line** tool and the **Polyline** tool.

The line is the simplest of all elements. It is defined by the start and end points and the connection between these points. The position of these points defines both the length and the orientation of the line.

The polyline, however, consists of several interconnected line segments. If the start and end points of the polyline meet, this is referred to as a closed polyline, otherwise it is known as an open polyline.

Generation

To draw a line, select the **Line** tool from the toolbox; the pointer becomes a **drawing** cursor.

Click the drawing area and, while holding down the mouse button, drag the resulting line to the required end point. The line is generated as soon as you release the mouse button.

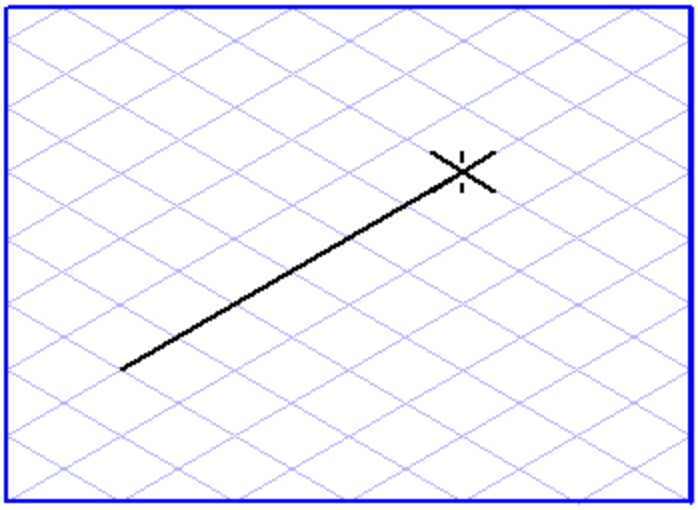

In order to draw a polyline, select the **Polyline** tool from the toolbox. Use the **drawing** cursor to click the drawing area and, holding down the mouse button, drag the resulting line to the required end point of the first segment. Now release the mouse button. Now click the drawing area. You will see that the end point of the first segment changes into the start point of the next segment. Drag the line across the screen and then release the mouse button. You can also add on further segments, if required.

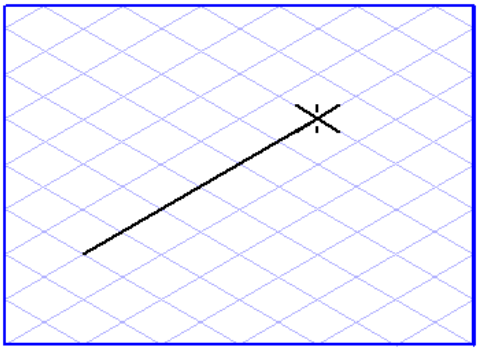

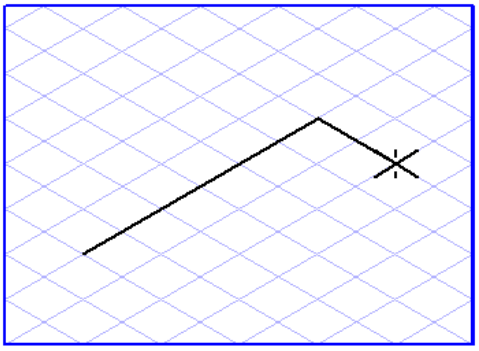

You can terminate the generation of a polyline automatically by linking the last segment generated to the start point. This will leave you with a closed polyline. To terminate creation of an open polyline, click the toolbox.

You can also terminate the drawing process by pressing the CTRL key which activates the **arrow** cursor, and then by clicking the drawing area.

Grid Alignment

The orientation of the lines depends on whether or not the **Grid alignment** function is active when the lines are generated. If the **Grid alignment** function is active, lines can only be drawn in the direction of the major axes of the current grid or in the horizontal plane.

Without **Grid alignment** it is possible to draw lines in any orientation. This setting can be temporarily reversed by holding down the ALT key while dragging the line.

Grid Snap and Element Snap

The start and end points of lines and segments of a polyline can be attracted by neighboring grid or element points. Whether or not they are attracted depends on the current setting for **Grid Snap** and **Element Snap**.

The **Grid Snap** setting can be temporarily reversed by holding down the CTRL key while dragging.

Show Dynamic Dimensions on the Element

If the **Show dynamic dimensions** option has been activated, length information is displayed for the relevant line segment while the line is being dragged. If the line is located on one of the major axes of the current grid or in the horizontal plane, the length of the line will be displayed. If this is not the case, two dimensions will be displayed – namely, the lengths along the two major axes involved.

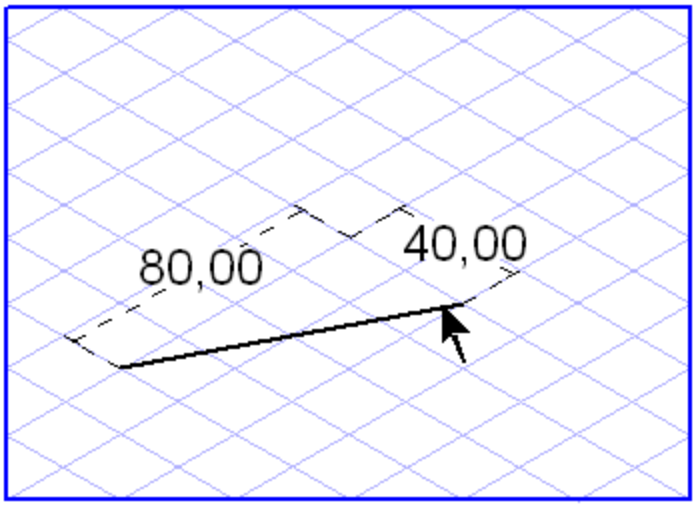

Displaying Dimensions in the Dimensions Bar

The dimensions bar shows a maximum of three dimensions when a line is dragged. The first field shows the length of the line without **perspective foreshortening**. The second field shows the **actual length** of the line, i.e. the true length. The third field indicates the **orientation angle** of the line relative to the horizontal.

If a line has been selected, you can change every dimension directly in these fields. Confirm your entry with the ENTER key. If you do not confirm your entry, Arbortext IsoView will confirm it automatically after a few seconds. Use the TAB key to move from one field to another.

In the case of a polyline, the bar will show the dimensions of the last segment drawn. Use **Element** ▸ **Element info** to obtain the dimensions of the other segments.

Selecting

You select lines and polylines by clicking their contours with the **arrow** cursor.

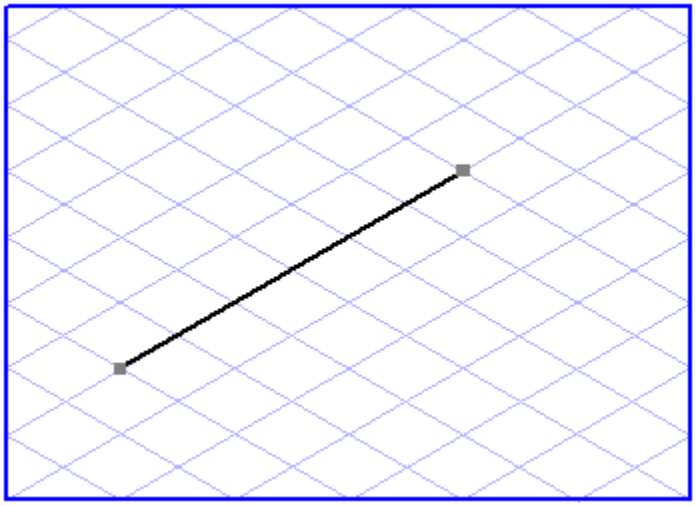

With polylines, you also have the option of selecting individual line segments. Hold down the ALT key, while clicking the relevant segment.

Modifying with the Arrow Cursor Tool

You can use the **Arrow cursor** tool to move lines and polylines anywhere within your drawing; you do this by clicking a line segment (not the element points) and by dragging the entire element to a new position while holding down the mouse button.

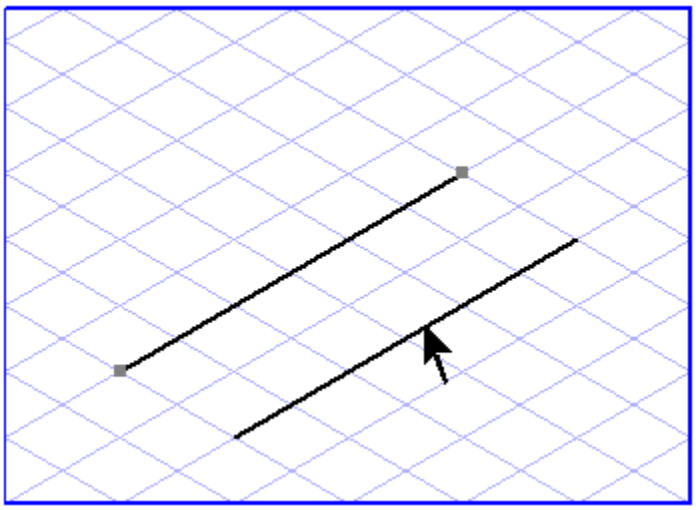

If you hold down the SHIFT key during this process, the direction in which you can move the element is restricted to the major axes of the current grid and the horizontal axis.

When grid snap or element snap is switched on, the element points snap to the nearest element or grid points.

You can change the length and orientation of individual segments by clicking an element point and then moving it to a new position. If you do this while working with polylines, both line segments adjacent to the point which is moved will change.

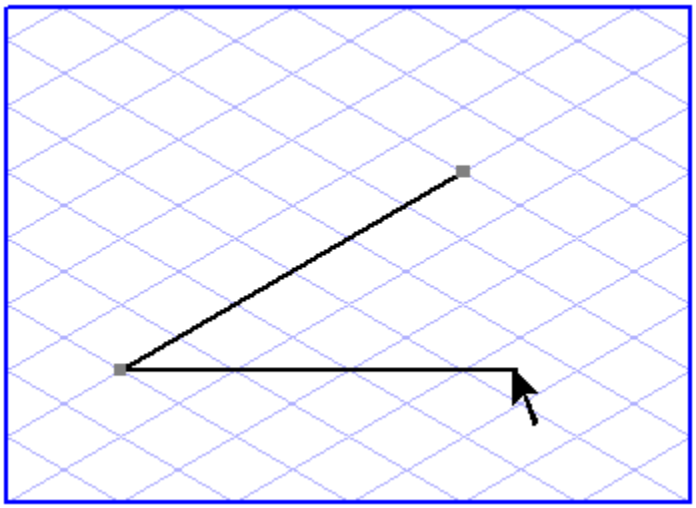

In the same way as when you generate lines, the settings for **Grid Snap**, **Element Snap**, and **Grid Alignment** are also applied when you perform these changes.

It is possible to retain the direction of a line by holding down the SHIFT key while you move the point to a new position.

Form

The form of a line is defined by its contour. Polylines can also have a fill.

The contour is defined by the pen, style and halo and by the options for the corner/end forms. These are all to be found in the **Attributes** window.

Each time you draw a new line or polyline, it will automatically receive the attributes currently assigned in the **Attributes** window.

You can change these attributes subsequently in a number of ways. To do this, select the elements or segments you want to change. Now click the button for the required attribute, e.g. a pen, in the **Attributes** window. The window of the required attribute appears. You can now change the attribute.

Double clicking an element or a selected segment changes the pen. The new pen is the switch pen of the old pen (see the **Edit pen** dialog in Show Attribute Window on page 352).

Note

When you use the ***Pens*** *window in the* ***Attributes*** *window to assign a pen, the style and halo are applied in the form they have been defined for the new pen. Whereas if you use the double-click method to change a pen the old style and halo settings are retained.*

When you draw a new polyline, it automatically receives the set fill. The fill can be either a color or a pattern. Fill settings can be changed or redefined in the **Fills** window. In the case of open polylines, the area to be filled is bounded by the linear connection between the open ends. You can close an open polyline by choosing **Element ▸ Paths ▸ Join polylines**.

You can change the fill of a polyline either with or without selection via the **Fills** window.

Element Info Line

The **Element info** command allows you to change the length and orientation angle of any particular line. Select a line and choose **Element ▸ Element info**.

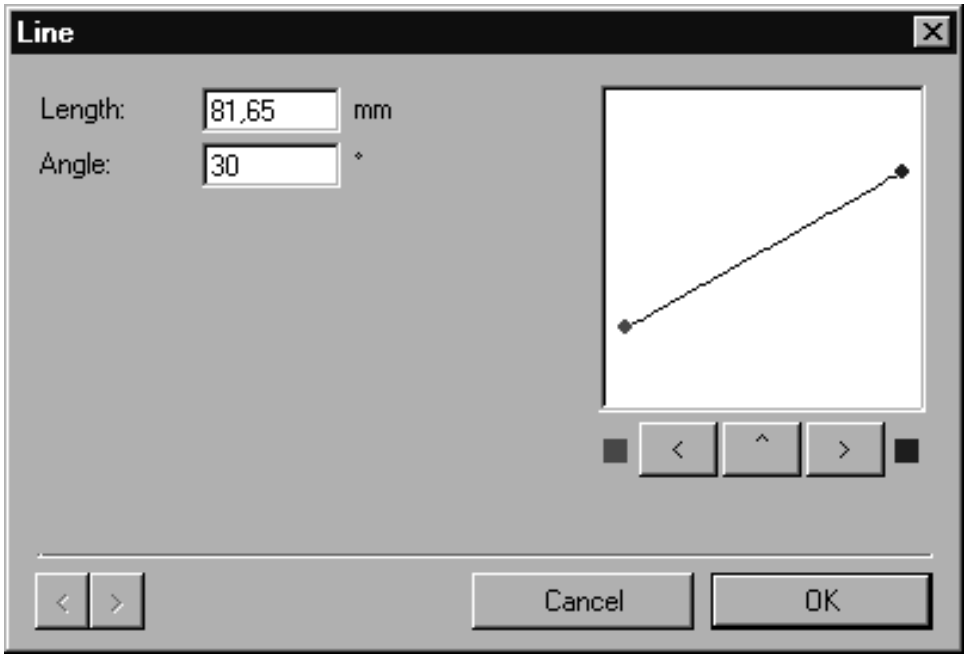

Note

The ***Element ▸ Element info*** *command can only be executed for a single element.*

You can perform changes by making entries in the respective fields. These changes will be displayed roughly in the preview box at the upper right.

Length

You can enter the length of the line in this field. The value displayed corresponds to the length which you can verify in the printout.

Note

The dimensions displayed while you are drawing correspond to the unforeshortened values along the major axes.

Angle

The angle determines the orientation of the line on the drawing sheet. It also specifies its inclination to the horizontal axis and is measured in a counter-clockwise direction.

If you have changed either the length or the angle of a line, you must also specify the points to be affected by the change.

Clicking the button next to the blue square or red square  moves the point shown in the same color on the line. Clicking the middle  button moves both end points by the same amounts.

Quitting the Dialog Box

You can confirm your entries by clicking **OK**. Clicking the **Cancel** button quits the dialog box without applying any changes you have made.

Element Info Polyline

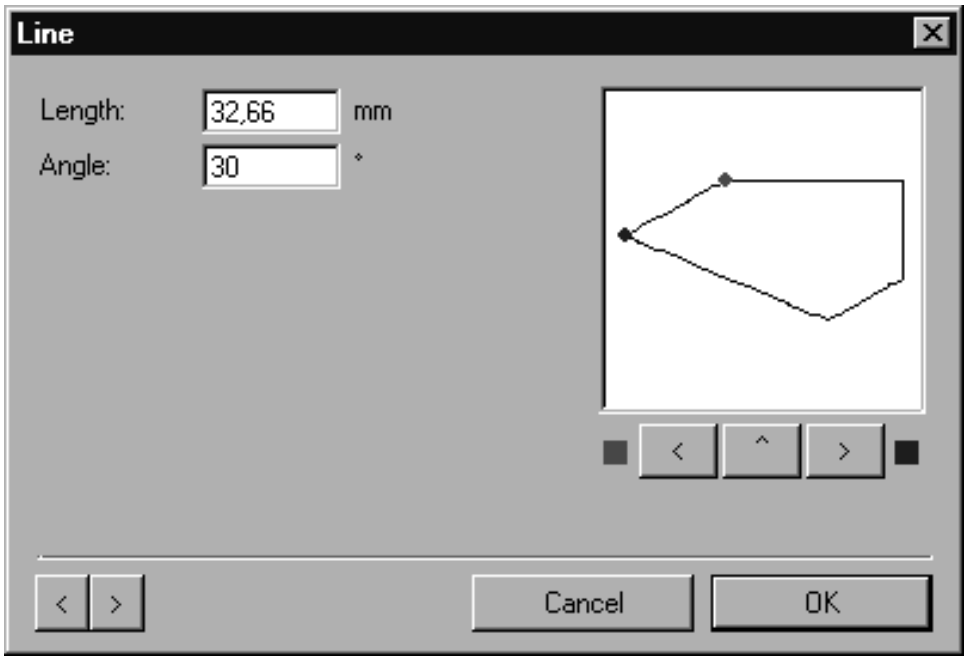

In addition to the entries you can specify for a line, it is also possible to perform further settings for a polyline.

Since a polyline consists of several line segments, it is possible to enter the **Length** and **Angle** for each line segment separately. The current line segment is already selected in the display field and you can switch to the next or last segment by clicking the **Next segment** and **Last segment** buttons respectively. The changes you make are applied to the particular line segment you have selected.

Converting the Element

To convert polylines, use any of the following commands:

Element ▸ Paths ▸ Join polylines to convert an open polyline into a closed one.

Element ▸ Convert ▸ into Bézier parts to convert lines and polylines into a Bézier path.

Element ▸ Convert ▸ into elements to convert a polyline into individual, simple lines which are initially grouped together. You can edit the lines individually once they have been ungrouped by executing **Element ▸ Ungroup**.

Note

A polyline is automatically converted into individual elements when you delete individual segments. Two polylines, two lines, or one line and one polyline appear depending on the length of the polyline and the segment that has been deleted.

Rectangle

A **rectangle** is composed of four corner points, the connections between these points, and the center.

In most cases, you will be drawing perspective rectangles. A perspective rectangle is a parallelogram located in one of the three major planes of the current grid. In isometric representations, for example, two angles of 60° and 120° are generated in each case.

In addition to drawing perspective rectangles and rectangles with four 90° angles, you can also draw rectangles with rounded corners. These rounded rectangles are composed of lines and ellipse segments, i.e. they consist of several elements. They can be edited later as a number of individual elements, whereas the rectangle is treated as a single element.

Generation

To draw a rectangle, select the **Rectangle** tool from the toolbox. The pointer becomes a **drawing** cursor.

Use the **drawing** cursor to click on the drawing area and, while still holding down the mouse button, drag the outline of the resulting rectangle across the screen. Release the mouse button when the rectangle meets your requirements.

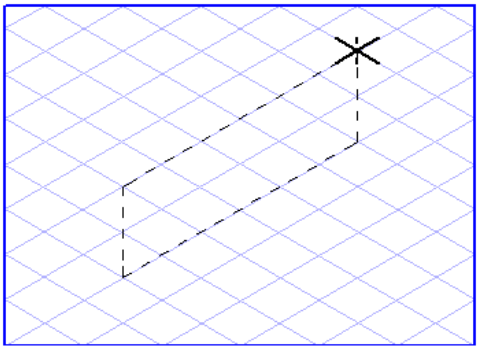

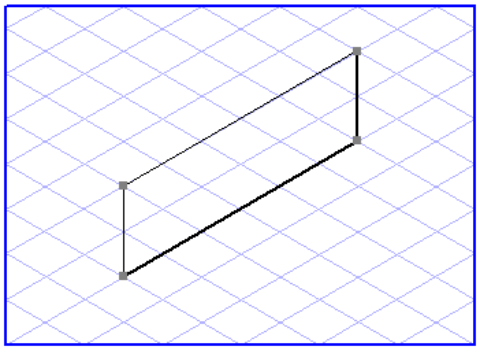

The start point is the point from which you started dragging the rectangle. The end point is the point at which you released the mouse button. The start point and end point lie diagonally opposite each other.

Unlike the **Rectangle** tool, the tool for **Rounded Rectangles** generates several individual elements: These elements include four lines and four ellipse segments which form a rectangle with rounded corners.

When dragging rounded rectangles, the tool behaves like the variant without rounding. The individual elements are generated upon releasing the mouse button. These individual elements can be edited in the same way as described for lines and ellipses.

You can set the radius for the corners using the **Corner radius** tool, last symbol in the pop-up menu for rectangles. The following dialog box will appear when this tool is selected:

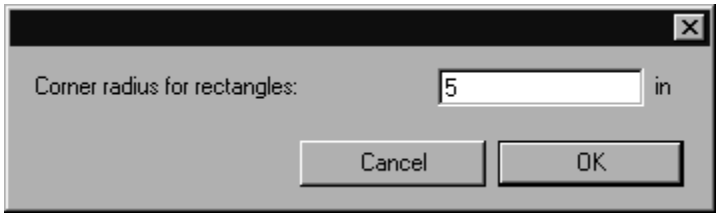

Enter the required corner radius which will be used from this point onwards. Then click **OK** to confirm your entry or **Cancel** to close the dialog box without applying any changes you have made.

Note

Set the corner radius prior to generating a rounded rectangle. This is quicker than having to change the individual elements later.

Grid Alignment

The orientation of the rectangle depends on whether or not the **grid alignment** function has been activated when the rectangle is generated. If the **grid alignment** function has been activated, you can only generate perspective rectangles. The orientation of the sides is then governed by the grid which is currently set.

Without **grid alignment**, a rectangle with four 90° angles is produced.

This setting can be temporarily reversed by holding down the ALT key while dragging.

The orientation and, consequently, the shape of a perspective rectangle depend on the direction in which you drag the rectangle from the start point. The rectangle is forced onto one of the three major planes of the current grid depending on the direction in which it is dragged.

Note

Should you have any difficulties in determining the orientation of a perspective rectangle, try the following technique. Click the drawing area with the ***Rectangle*** *tool and, holding down the mouse button, move the cursor in a circular pattern. You will now see how the orientation and the shape of the displayed rectangle change.*

Grid Snap and Element Snap

The start and end points of a rectangle can be attracted by neighboring grid and element points. Whether or not they are attracted depends on the current setting of **Grid Snap** and **Element Snap**.

The **Grid Snap** setting can be temporarily reversed by holding down the CTRL key while dragging.

Show Dimensions on the Element

If the **Show dimensions** option has been activated, length information relating to the pairs of parallel sides is displayed when the rectangle is dragged. In the case of perspective rectangles, the lengths are shown along the two major axes involved. The width and height are displayed for rectangles with four 90° angles.

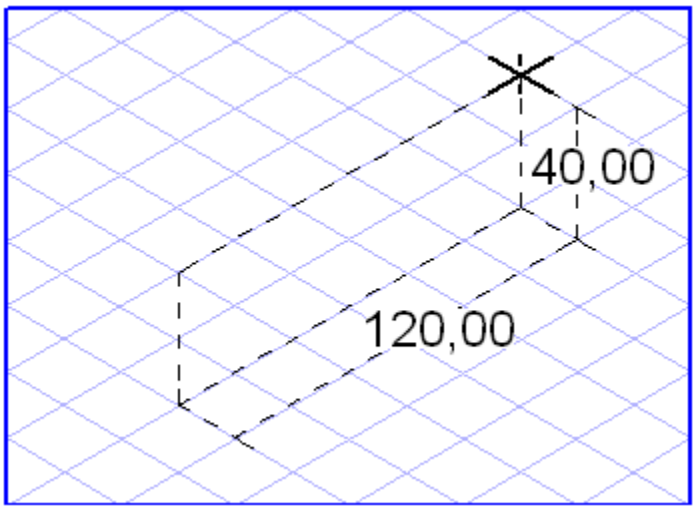

Displaying Dimensions in the Dimensions Bar

The dimensions bar shows a maximum of four dimensions when a rectangle is dragged. The first two fields show the width and height of the rectangle without **perspective foreshortening**. The third and fourth fields show the actual dimensions of the rectangle, i.e. the **true lengths**. If a rectangle has been selected, you can change every dimension directly in these fields. Confirm your entry with the ENTER key. If you do not confirm your entry, Arbortext IsoDraw will confirm it automatically after a few seconds. Use the TAB key to move from one field to another.

Selecting

You select a rectangle by clicking the **arrow** cursor on its contour or center.

You can also select the sides of the rectangle individually. Hold down the ALT key, while clicking the relevant side.

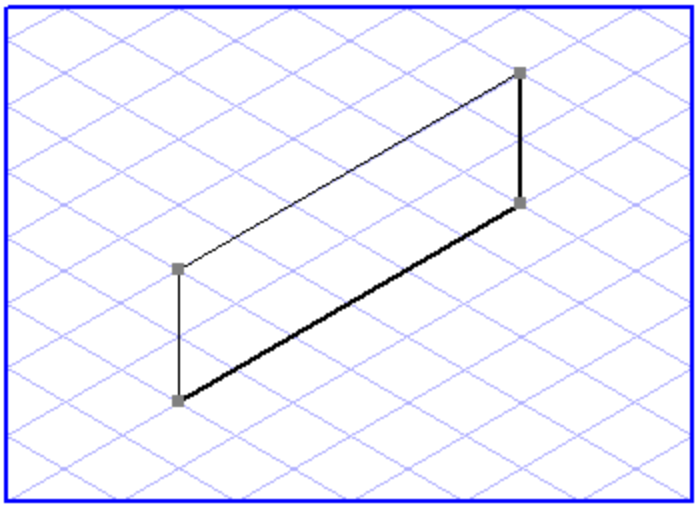

Modifying with the Arrow Cursor

You can use the **Arrow cursor** tool to move a rectangle anywhere within your drawing by clicking on its contour (not the corner points) or its center point and by moving it to a new position while holding down the mouse button.

By holding down the SHIFT key during this operation, you can restrict the direction in which the polygon is moved to the major axes of the current grid and the horizontal axis.

If grid snap or element snap has been activated, the element points snap to the nearest points.

You can change the size or orientation of a rectangle by clicking on a corner point and dragging it to a new position while holding down the mouse button.

In the same way you generate a rectangle, the settings for grid snap, element snap, and grid alignment are also applied when you perform changes. Depending on the setting of the grid alignment, it is possible e.g. to produce a rectangle with four 90× angles from a perspective rectangle!

It is possible to retain the width or height of a rectangle by holding down the SHIFT key while you move a corner point to a new position. The width or height changes depending on the direction in which you drag the rectangle.

Form

The form of a rectangle is determined by its contour and fill.

The contour is defined by the pen, style and halo and by the options for the corner/end forms. These are all to be found in the **Attributes** window. The fill can be either a color or a pattern. Fill settings can be changed or redefined in the **Fills** window.

If you draw a new rectangle, it is automatically assigned an equal mixture of the **Thick** and **Thin** standard pens. The **Thick** pen is used from the start point (in counter-clockwise direction) up to the end point, while the **Thin** pen is used from the end point back to the start point. In a perspective illustration, this form of representation involving two inner edges and two outer edges is appropriate in most applications. Consequently, the automatic assignment of **Thick** and **Thin** is not governed by the pen you have already selected.

Double clicking a rectangle or a side you have selected changes the pen. The new pen is the switch pen of the old pen (see the **Edit pen** dialog in Show Attribute Window on page 352. This feature allows you, for example, to reverse the distribution of inner and outer edges, i.e. of **Thick** and **Thin**, with ease.

Note

*When you use the **Pens** window in the **Attributes** window to assign a pen, the style and halo are applied in the form they have been defined for the new pen. Whereas if you use the double-click method to change a pen the old style and halo settings are retained.*

If a halo has been set, it is only applied to the half of the rectangle drawn with the **Thick** pen. The style, the corner/end forms and the fill are generated automatically from the current attributes selected in the **Attributes** and **Fills** windows.

You can change the attributes subsequently in various ways. To do this, select the elements or sides you want to change. Now click the button for the required attribute, e.g. a pen, in the **Attributes** window. The window of the required attribute appears. You can now change the attribute.

Note

If you assign a pen to the rectangle you have selected, this pen will be applied uniformly on all the sides. The different line thicknesses set initially will be lost as a result.

The fill of a rectangle can also be changed without having to select the elements (see Show Fill Window on page 408).

Element Info

The **Element info** dialog box enables you to change the width and height of any particular rectangle. Select a rectangle and choose **Element ▸ Element info**.

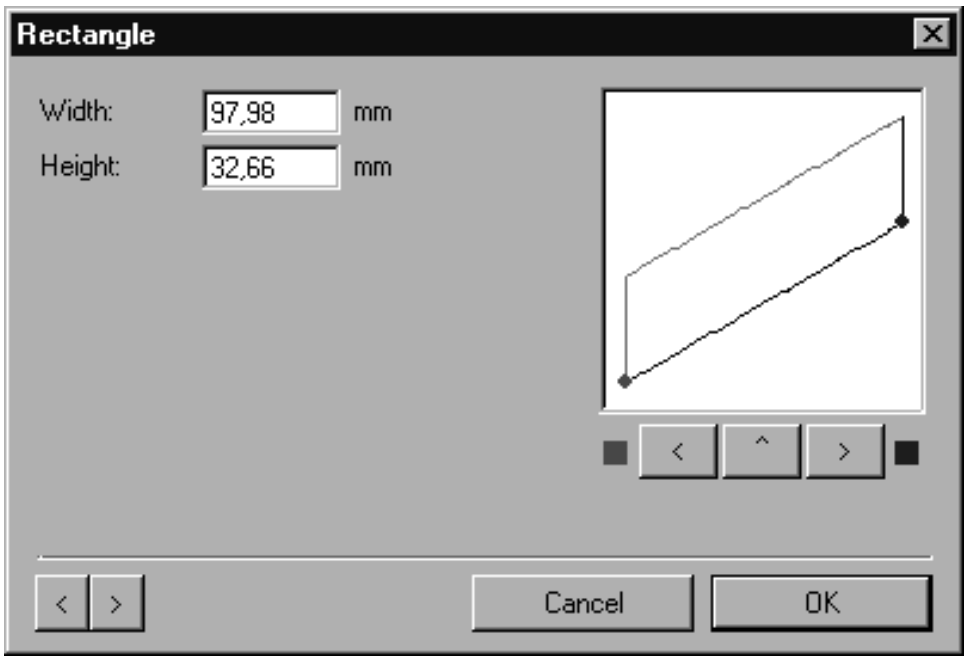

Note

*The **Element ▸ Element info** command can only be executed for a single element.*

You can perform changes by making entries in both fields. These changes will be displayed roughly in the preview box at the upper right.

The current side is already selected in the display field and you can switch to the next or last segment by clicking the **Next segment** and **Last segment** buttons respectively. The changes you make are always applied to the selected side.

Width and Height

In a flat view there are exact rules governing how the width and height are to be measured. In perspective representations, however, such a clear-cut assignment is not possible. Consequently, when the **Element info** dialog box is called up, the side whose length is referred to as the width is always selected. The height is measured on one of the sides abutting this initial segment.

The values displayed correspond to the lengths which you can verify in the printout.

Note

The dimensions displayed while you are drawing correspond to the unforeshortened values along the major axes.

Width

You can enter the width of the rectangle in this field. You then specify which points are to be affected by the change.

Clicking the button next to the blue square or red square  moves the point shown in the same color on the line (rectangle line). Clicking the middle  button moves both end points by the same amounts.

The points of the rectangle lying opposite each other are also moved accordingly.

Height

You can enter the height of the rectangle in this field. You then specify which points are to be affected by the change.

Clicking the button next to the blue square or red square  moves the point shown in the same color on the line (rectangle line). Clicking the middle  button moves both end points by the same amounts.

The points of the rectangle lying opposite each other are also moved accordingly.

Quitting the Dialog Box

You can confirm your entries by clicking **OK**. Clicking the **Cancel** button quits the dialog box without applying any changes you have made.

Converting the Element

Choose **Element** ▸ **Convert** ▸ **into elements** to convert rectangles into individual lines. These lines are initially grouped together after being converted. You can edit the lines individually once they have been ungrouped by executing **Element** ▸ **Ungroup**.

Note

A rectangle is automatically converted into lines or polylines if you delete individual sides.

You can use the **Element ▸ Convert ▸ into Bézier parts** command to convert a rectangle into a Bézier path.

Note

Once a rectangle has been converted into individual lines or a Bézier path, it is not possible to convert these back into the former rectangle.

Ellipse

An ellipse consists of six points, the arc segments and the center point.

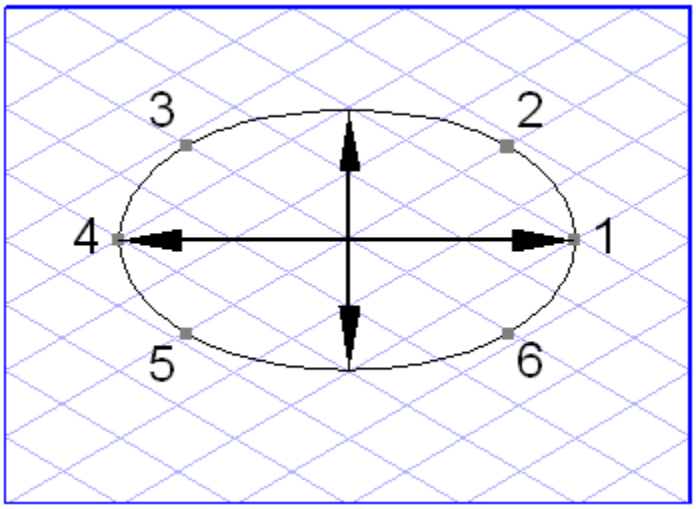

Points 1 and 4 represent the vertices of the ellipse. The distance between them is the diameter. The minor axis runs through the center point at right angles to the diameter. Points 2, 3, 5 and 6 mark the intersection points between the ellipse and the major axes of the perspective plane on which the ellipse is located.

In a perspective illustration, the ellipse represents the projection of a circle onto an imaging plane (drawing plane). Its appearance is determined by the ellipse value and the orientation angle. These two values define the perspective plane of the ellipse.

The ellipse value indicates the degree to which the original circle is tilted with respect to the imaging plane. A circle in a technical drawing has an ellipse value of 90°. If the circle is tilted backwards, the ellipse value reduces: The form changes into that of an ellipse. The ellipse value can be reduced down to 0°: All that remains is a line.

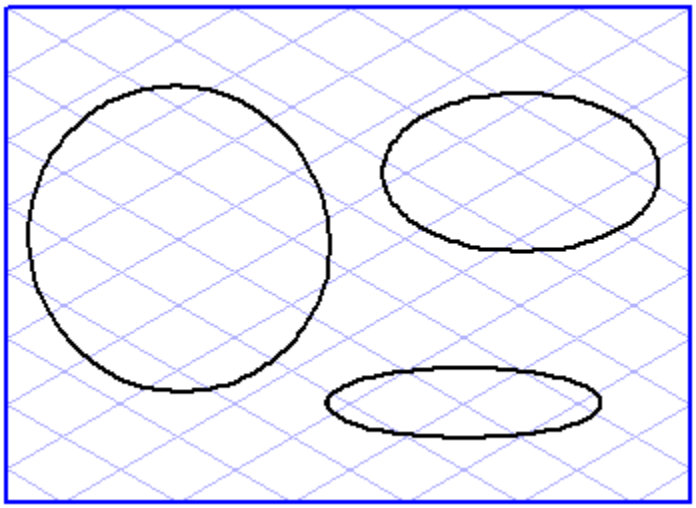

The ellipse now has to be rotated so that it lies on the correct axis. This is controlled by the orientation angle. The orientation angle indicates the inclination of the ellipse diameter relative to the horizontal axis. An angle of 0° or 180° means that the ellipse is horizontal. This is so if it is lying on the flat top surface of a cube, for example.

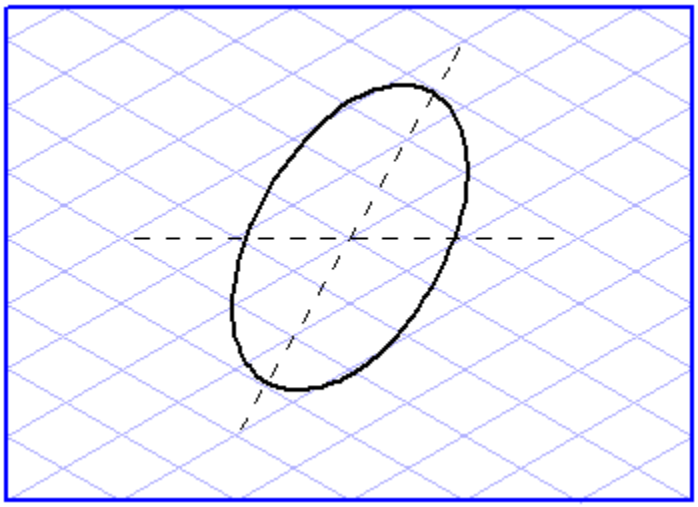

Note

Circles always have an orientation angle of 0°.

Generation

To draw an ellipse, select the **Ellipse** tool from the toolbox. The pointer becomes a **drawing** cursor.

You draw an ellipse by clicking the drawing area with the drawing cursor and, holding down the mouse button, dragging out the resulting outline of an ellipse. The ellipse is finished when you release the mouse button.

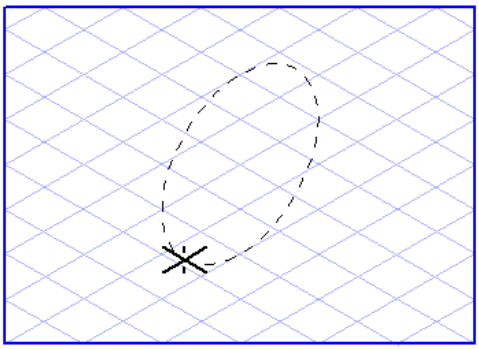

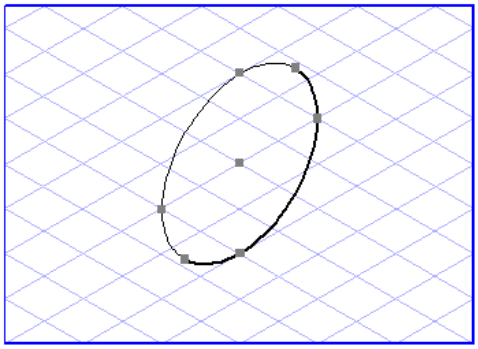

Each ellipse is generated with the current ellipse value. This value can be set using the **Ellipse value** pop-up menu in the toolbox. When the program is opened, this menu is defaulted to **Standard ellipse**.

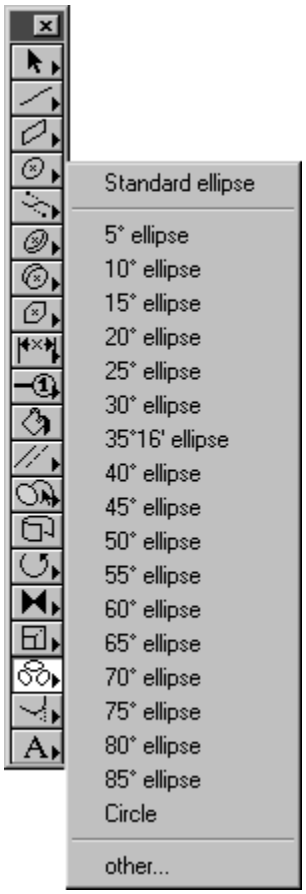

The default **Ellipse** tool described above allows you to generate ellipses by dragging them from the center point. The second **Ellipse** tool enables you to create an ellipse by dragging it from one vertex to the other.

Grid Alignment

The orientation of an ellipse depends on whether or not **Grid alignment** is switched on when the ellipse is generated. If the **Grid alignment** function is active, the ellipse is forced into one of the three major planes of the current grid depending on the direction the ellipse is dragged in.

The ellipse can be rotated freely if **Grid alignment** is off.

This setting can be temporarily reversed by holding down the ALT key while dragging an ellipse.

The orientation and ellipse value of an ellipse depend on the direction in which you drag the ellipse from the start point. Different ellipses will be generated depending on the direction you select.

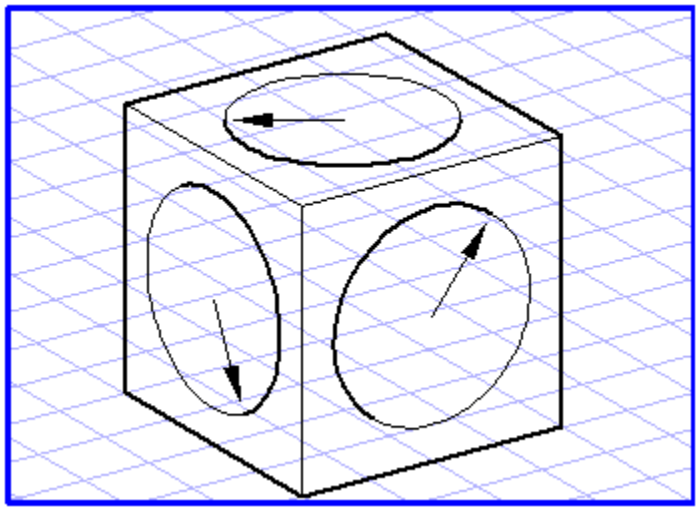

Note

Should you have any difficulties in defining the orientation and ellipse value of an ellipse, try the following technique. Drag an ellipse and, with holding down the mouse button, describe a circle at some distance from the start point. Notice how the ellipse changes form.

Grid Snap and Element Snap

You can generate an ellipse by dragging from either the center point or a vertex (depending on the tool you select). The start and end points can be attracted by neighboring grid or element points. Whether or not they are attracted depends on the current setting of **Grid Snap** and **Element Snap**.

The **Grid Snap** setting can be temporarily reversed by holding down the CTRL key while dragging.

You can also drag an ellipse along a major axis. If you press the CAPS LOCK key while you are dragging the ellipse, this produces a different end point. Instead of a vertex, the magnetic grid or the element magnet attracts one of the ellipse's vertices with the major axes.

Show Dimensions on the Element

If the **Show Dynamic Dimensions** option is active, the diameter of the ellipse will be displayed as it is being dragged.

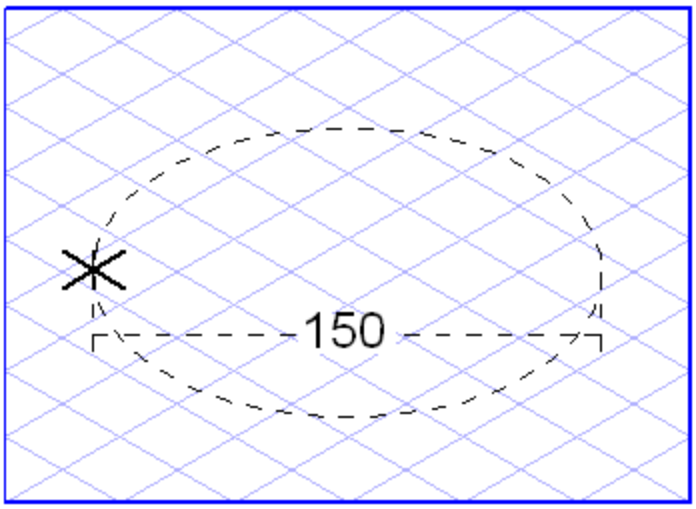

Displaying Dimensions in the Dimensions Bar

The dimensions bar shows a maximum of four dimensions when an ellipse is dragged. The first field shows the **diameter** of the ellipse between the vertices. This corresponds to the dimension of the associated circle diameter. The second field shows the **ellipse value** of the ellipse. The third field indicates the **orientation angle** of the ellipse relative to the horizontal.

If an ellipse has been selected, you can change every dimension directly in these fields. Confirm your entry with the ENTER key. If you do not confirm your entry, Arbortext IsoDraw will confirm it automatically after a few seconds. Use the TAB key to move from one field to another.

Selecting

Select an ellipse by clicking on its contour or center point with the **arrow** cursor.

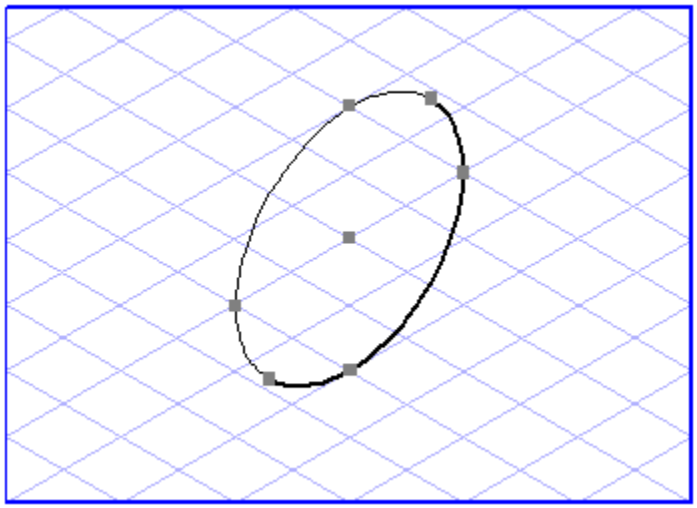

You can also select individual ellipse segments. Simply hold down the ALT key, while clicking the relevant segment. This allows you, for instance, to delete the part or to change its line style. The ellipse is retained as an element.

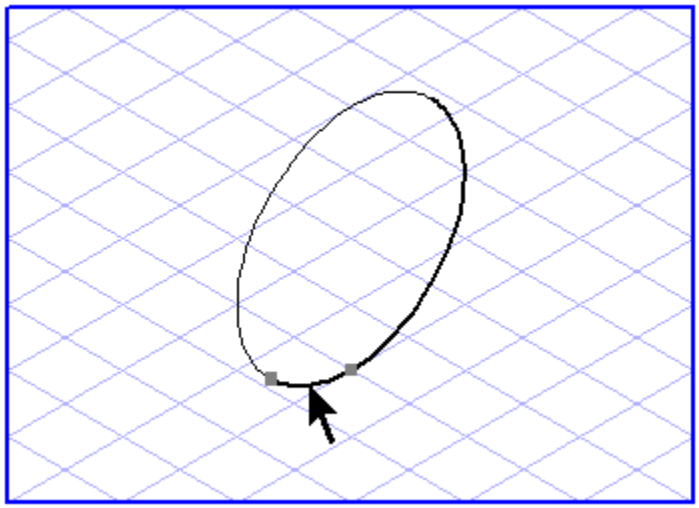

Modifying with the Arrow Cursor

You can use the **Arrow cursor** tool to move the ellipse to any part of the drawing area by clicking the contour or center point of the ellipse and moving the ellipse to a new position while holding down the mouse button. If you hold down the SHIFT key during this process, the direction in which you can move the element is restricted to the major axes of the current grid and the horizontal axis.

If you also hold down the ALT key while moving the ellipse, you will only be able to move the ellipse in the direction of the diameter or the minor axis.

When grid snap or element snap is switched on, the element points snap to the nearest element or grid points.

You can change the size or orientation of an ellipse by clicking on one of the six contour points and moving it, while holding down the mouse button, to a new position. The ellipse will be redrawn. In the same way as when you draw an ellipse from scratch, the settings for grid snap, element snap, and grid alignment also apply when you make changes.

Note

When changing the ellipse with the ***Arrow cursor*** *tool, the ellipse value currently set will be applied (even if you originally created the ellipse with a different ellipse value).*

You can retain the orientation and ellipse value if you change the size of the ellipse. Do this by holding down the SHIFT key and ALT key while dragging the ellipse.

You can change the ellipse value of an ellipse.

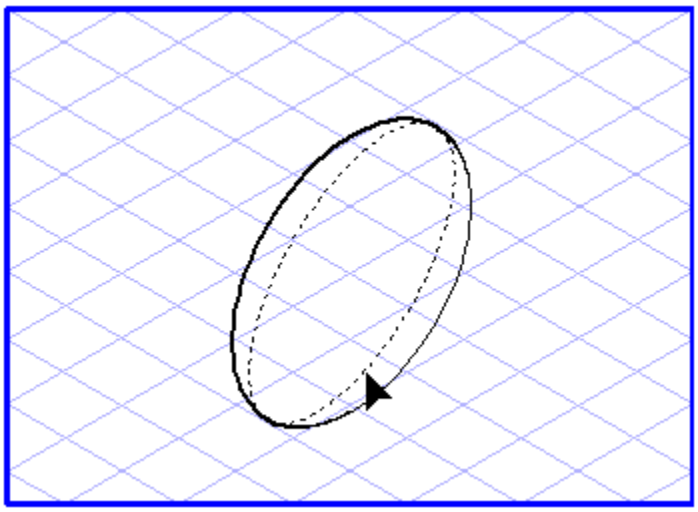

To change the ellipse, hold down the SHIFT key, click the right mouse button on the contour and drag the ellipse into the desired form.

As soon as you release the mouse button, the set ellipse value will be applied to the ellipse.

Form

The form of an ellipse is determined by its contour and fill.

The contour is defined by the pen, style and halo and by the options for the corner/end forms. These are all to be found in the **Attributes** window. The fill can be either a color or a pattern. Fill settings can be changed or redefined in the **Fills** window.

If you draw a new ellipse, it is automatically assigned an equal mixture of the **Thick** and **Thin** standard pens. `0°` to `180°` (counter-clockwise) being **Thick** and `180°` to `360°` being **Thin**. The `0°` point is the vertex at which you dragged the ellipse. In a perspective illustration, automatic assignment of thick and thin lines to inner and outer edges is generally appropriate. It is therefore performed irrespective of the preset pen.

The ellipse in the example opposite has been dragged to the right. It has an orientation angle of 0° and its top half is drawn thick.

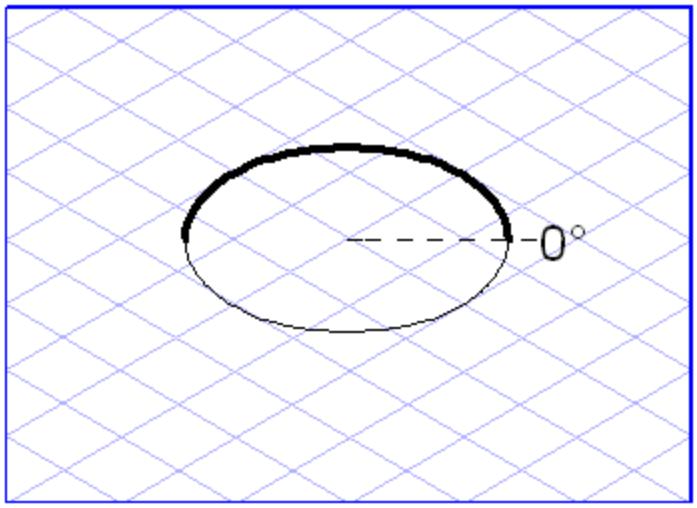

In this case, the ellipse has been dragged to the left. The orientation angle is thus 180° and the bottom half is drawn with the **Thick** pen.

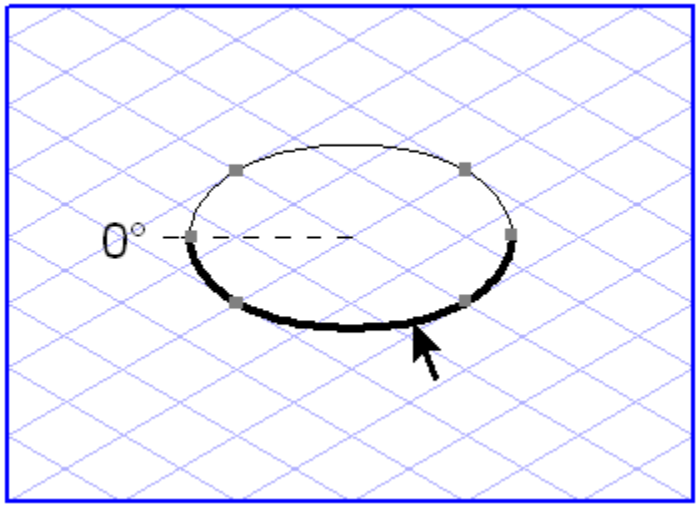

If a halo has been set, it is only applied to the half of the ellipse drawn with the **Thick** pen.

The style, the corner/end forms and the fill are generated automatically from the attributes selected in the **Attributes** and **Fills** windows at the time the ellipse is generated.

You can change these attributes subsequently in a number of ways. Select the ellipses or ellipse segments you want to change. Now click the button for the required attribute, e.g. a pen, in the **Attributes** window. The window of the required attribute appears. You can now change the attribute.

Note

If you assign a pen to a selected ellipse, the pen is applied uniformly to all segments of this ellipse. The different line thicknesses set initially will be lost as a result.

The fill of an ellipse can also be changed without having to select the elements (see Show Fill Window on page 408).

You can change the pens by double clicking an ellipse or a selected segment. The new pens are the switch pens of the old pens (see the **Edit pen** dialog in Show Attribute Window on page 352. This feature allows you, for example, to reverse the distribution of inner and outer edges, i.e. of Thick and Thin, with ease.

Note

*When you use the **Pens** window in the **Attributes** window to assign a pen, the style and halo are applied in the form they have been defined for the new pen. Whereas if you use the double-click method to change a pen the old style and halo settings are retained.*

Note

*The form of the transitions between different line thicknesses on ellipses is influenced by the setting in the **Attributes** preferences panel (see Preferences on page 108).*

Element Info

The **Element info** dialog box allows you to change the diameter, value and angle of an ellipse or to convert it into a thread. Select an ellipse, then choose **Element ▸ Element info**.

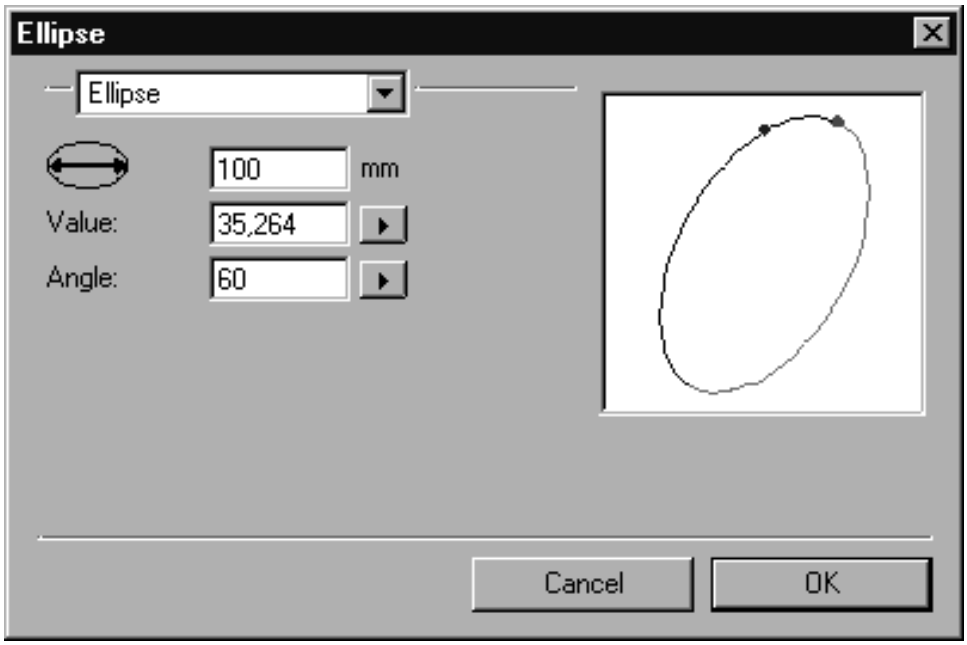

Note

*The **Element ▸ Element info** command can only be executed for a single element.*

You can perform changes by making entries in the respective fields or by making selections from the pop-up menus. These changes will be displayed roughly in the preview box at the upper right.

Diameter

You can use this field to enter the diameter of the ellipse, i.e. the distance between the two vertices 1 and 4 (see Ellipse on page 502).

If you are working with No isometric foreshortening (see Preferences on page 108), element info also gives the diameter between vertices 2 and 5 and vertices 3 and 6 (see Ellipse on page 502). In this case, set the ellipse diameter here .

Angle

The ellipse value can be defined either by entering a value or by making a selection from the pop-up menu.

Orientation

The orientation angle can also be defined by entering a value or by making a selection from the pop-up menu.

Nearest axis rotates the ellipse to the nearest axis, while **X axis**, **Y axis** and **Z axis** rotate it to the relevant axis. The angles of these axes depend on the grid which is currently set. The command `+ 180°` rotates the ellipse by 180°. The value obtained from the selection in the pop-up menu is displayed in the entry field.

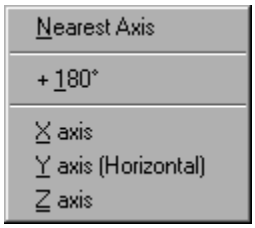

Conversion to a Thread

The pop-up menu at the top of the dialog box allows you to convert the ellipse to either an inner or an outer thread and to edit it without exiting the dialog box. The **Element info** dialog box changes accordingly (see Inner Thread on page 525 and Outer Thread on page 532).

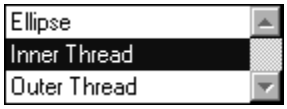

Note that threads cannot be assigned fills, for example. Assigning contour attributes to threads is also restricted compared with ellipses. Consequently, any attribute you have assigned to an ellipse cannot be applied upon conversion to a thread.

When converting ellipses to threads, any missing segments of the ellipse are added.

Quitting the Dialog Box

You can confirm your entries by clicking **OK**. Clicking the **Cancel** button quits the dialog box without applying any changes you have made.

Converting the Element

To convert ellipses to Bézier paths, choose **Element ▸ Convert ▸ into Bézier parts**. If you have deleted individual segments of the ellipse, the ellipse may be converted into several Bézier paths.

Note

A Bézier path cannot be converted back into an ellipse afterwards.

Bézier Path

You can use Bézier paths (also known as Bézier curves) to represent irregular shapes.

They consist of at least two Bézier points and the path segments, which always interlink two points.

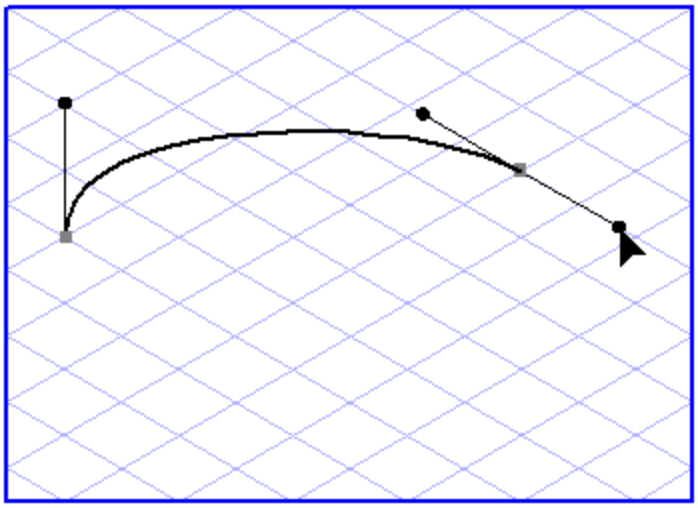

A Bézier path can be either open or closed. An open path has two separate end points, while these end points coincide in the case of a closed path.

Each Bézier point can have up to two handles, the length and direction of which determine the curve of the segments. Their end points are called handle points.

Bézier points can be either curve point" or corner points" Curve points have two handles which lie on a common line and thus form a uniform transition between two adjacent segments. In the case of corner points, the handles can be positioned at any angle to each other or can be dispensed with. This produces a kink in the curve profile. Corner points without handles are connected by a straight line.

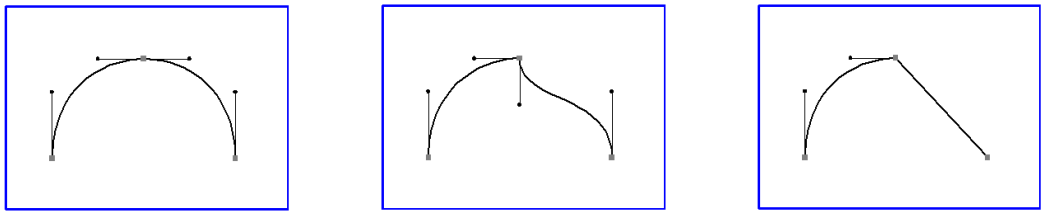

Generation

To draw a Bézier path, select the **Bézier** tool from the toolbox. The pointer becomes a **Bézier** cursor.

Click the drawing area with the drawing cursor and, holding down the mouse button, drag the cursor in the required direction. This generates the first Bézier point complete with a handle. Release the mouse button and click again, this time slightly further away. Here, too, drag a handle out of the point holding down the mouse button. You have now created a Bézier path with two points, each of which has a handle.

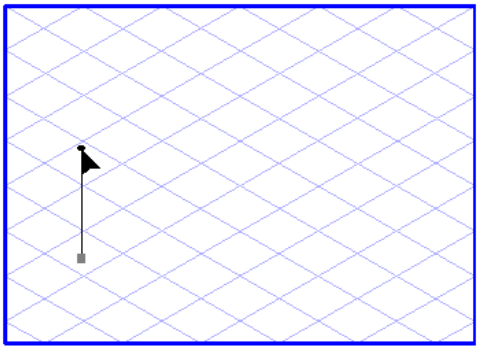

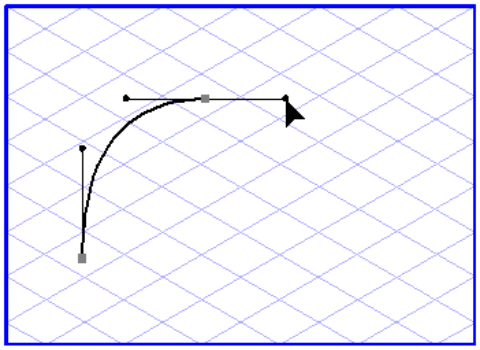

By dragging the cursor while holding down the mouse button, you will have generated curve points with handles. For as long as you hold down the mouse button, you can change the position of a handle point and thus the shape of the curve. Add a further point in the same way. Let us now suppose you wanted the path to make a sharp turn at the last point. To do this, you need to convert the curve point into a corner point. Press the ALT key and click briefly on the last Bézier point

The last handle disappears. Now click the next point of the path briefly but without dragging it. This point, too, then turns into a corner point.

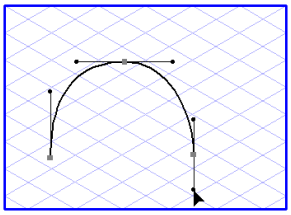

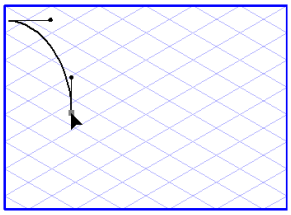

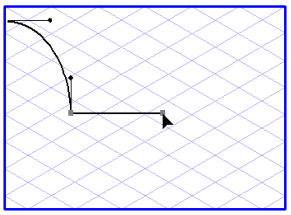

In order to generate a handle for the rest of the path, click the last point again and drag out a handle. Then continue drawing the path at will.

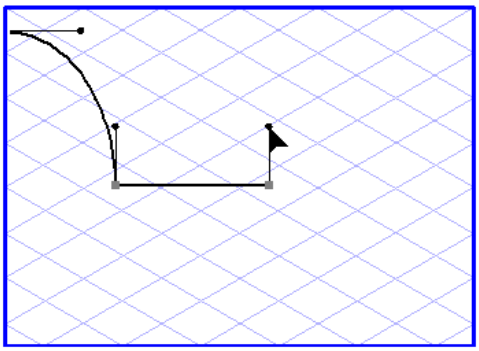

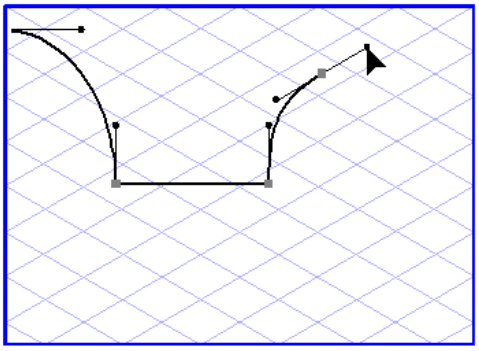

While you are working on a Bézier path, you can perform changes to parts that have already been drawn:

- To insert an additional point, press the SHIFT key and click the location on the path where you want to position the point.
- To delete an existing point press the SHIFT key and quickly click the point you want to delete.
- To move a Bézier point or a handle point, press the CTRL key in order to switch briefly to the **arrow** cursor. Then click the required point and move it to its new position.

It is possible to terminate creation of a Bézier path automatically if you link the last Bézier point with the start point. This produces a closed Bézier path.

To terminate creation of an open Bézier path, click either the toolbox or the menu bar.

A further way of creating Bézier paths is the **Freehand** tool. This you can use to draw contours which Arbortext IsoDraw converts automatically to Bézier paths.

Select the **Freehand** tool from the toolbox. The pointer becomes a Bézier cursor.

Use the cursor to click the drawing area at the point you want the path to begin. Draw the required path by moving the cursor while holding down the mouse button. As you drag the cursor, a dotted line traces your path. When you release the mouse button, Arbortext IsoDraw automatically uses what you have drawn to generate a Bézier path with appropriate points and handles.

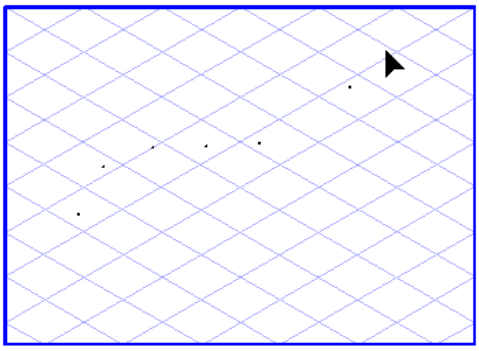

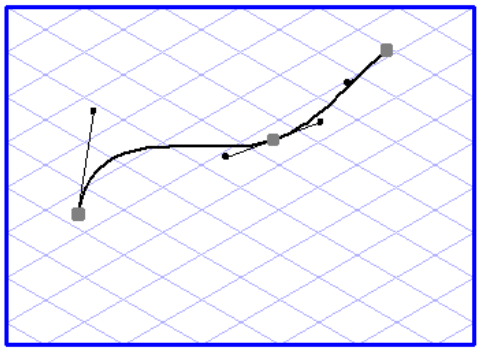

Grid Alignment

The orientation of the handles depends on whether or not grid alignment is active when the Bézier path is being generated. If the **Grid alignment** function is active , the handles are forced into one of the major axes of the current grid or into the horizontal axis.

If **Grid alignment** is switched off , you can define the orientation of the handles freely.

This setting can be temporarily reversed by holding down the ALT key while dragging the handle.

Both Bézier points and handle points can be attracted by neighboring grid points or element points. Whether or not they are attracted depends on the current setting of **Grid Snap** and **Element Snap** .

Grid Snap and Element Snap

When you are setting Bézier points or dragging handles, you can temporarily reverse the **Grid Snap** setting by holding down the CTRL key.

Show Dynamic Dimensions on the Element

Bézier paths cannot be assigned to a perspective plane directly. Consequently, no dimensions are displayed.

Displaying Dimensions in the Dimensions Bar

The Dimensions bar shows no dimensions. This is because Bézier paths cannot be assigned directly to a perspective plane and the positions of the handles cannot be defined easily using dimensions.

Selecting

You can select a Bézier path by clicking on its contour with the **arrow** cursor. Individual path segments can be selected by holding down the ALT key while you click the segment in question. You can thus change e.g. the line style of a path segment or delete the selected segment.

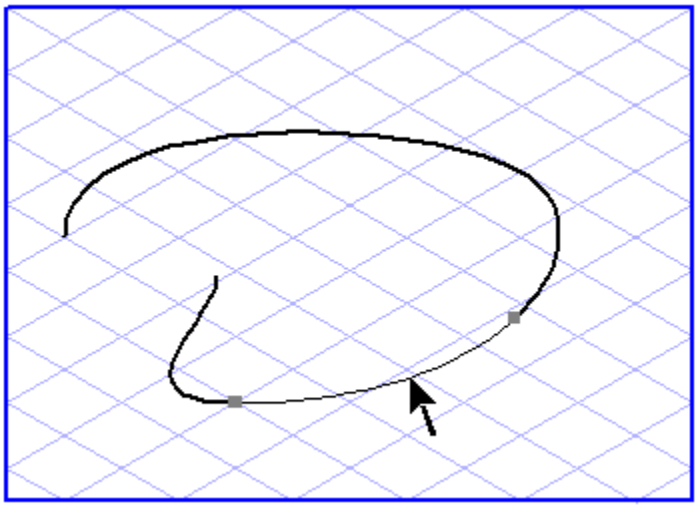

To connect Bézier paths you can select Bézier points. To do so, click on the points in question. The points are then displayed in the previously-specified 2nd selection color.

Modifying with the Arrow Cursor

You can move a Bézier path to any point on the drawing area using the **Arrow cursor** tool. Do this by clicking the contour of the path and moving it to the new position while holding down the mouse button. If you hold down the SHIFT key during this process, the direction in which you can move the element is restricted to the major axes of the current grid and the horizontal axis.

The extent of a Bézier path can be changed in a number of ways. Firstly, you can move a Bézier point. Click it with the **arrow** cursor and move it while holding down the mouse button. Secondly, you can change the curve profile by moving the handles. Do this by clicking a handle point and moving it to a new position while

holding down the mouse button. In the same way as when you generate the points, the settings for grid snap, element snap, and grid alignment are also applied to any changes you make.

Switching between Corner Point and Curve Point

You can convert a corner point into a curve point and vice versa. Do this by selecting the **Arrow cursor** tool from the toolbox. Then double-click on the relevant point while holding down the ALT key. After a curve point has been converted into a corner point, the orientation of each of the adjacent handles can be set separately. When converting a corner point to a curve point, the orientation of the handles does not change initially. Only when you move one of the handle points does the other handle snap in the direction of the handle you have moved.

Note

Even during the generation stage, you are able to convert a curve point to a corner point. See *Generation on page 517* *for instructions.*

Deleting Handles

You can delete an already drawn handle. Select the **Arrow cursor** tool from the toolbox. Then double-click on the relevant handle point while holding down the ALT key. The related Bézier point will be converted automatically to the corner point.

Add Missing Handles

You can add missing handles to a Bézier point. Select the **Arrow cursor** tool from the toolbox. Holding down the ALT key, click the Bézier point and drag out the handle.

Extending a Bézier Path

A Bézier path can be extended in a variety of ways. It must have been selected first, however.

You can add an additional Bézier point by clicking the path with the **Bézier** tool while holding down the SHIFT key. The new point is inserted at the point where you clicked. The curve profile will not be affected.

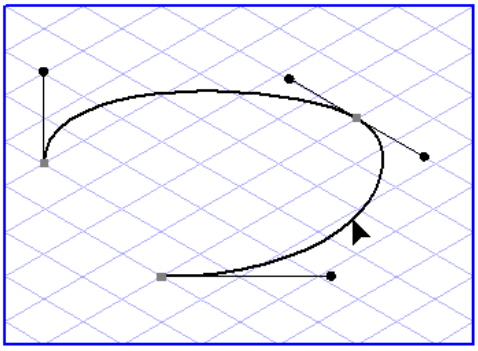

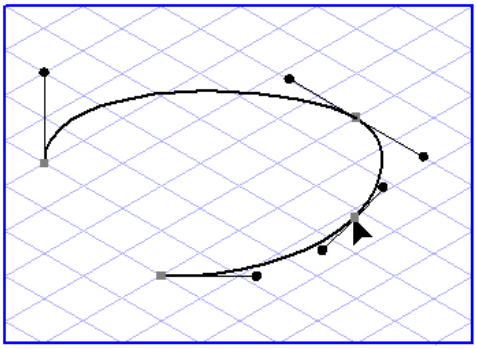

Note

This function has two uses. If you click the contour but not a Bézier point, a point will be added. If you click a Bézier point, however, the point will be deleted.

You can extend an open Bézier path. To do so, briefly click one of the path's two end points with the **Bézier** tool while holding down the SHIFT key. You can then add further Bézier points by clicking.

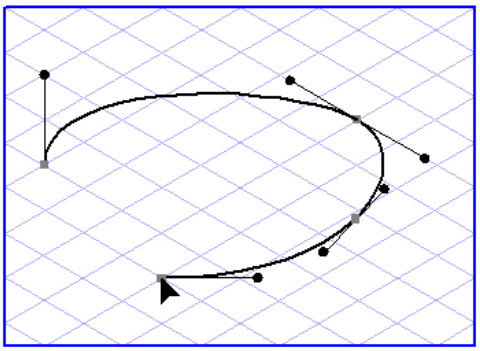

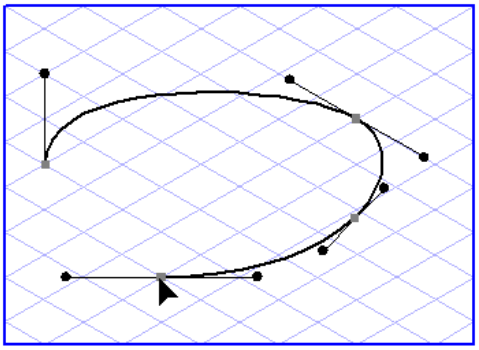

Bézier paths can be connected to other Bézier paths and also to lines, rectangles, polygons and ellipses. Refer to Paths on page 165.

Deleting Bézier Points

To delete Bézier points, select the **Delete Bézier points** tool from the toolbox. The pointer becomes a **Bézier** cursor.

You can use this tool to delete either individual Bézier points or several Bézier points simultaneously. An individual Bézier point is removed if you click it with the **Bézier** cursor. You can remove several points simultaneously if you click the mouse button and drag a selection rectangle while holding down the mouse button. When you release the mouse button, all Bézier points inside the selection rectangle will be deleted. It is unimportant whether the rectangle encloses the points of only one element or several elements.

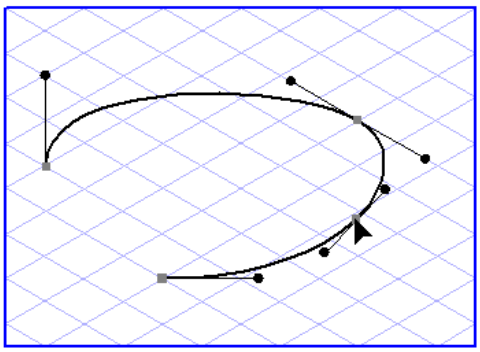

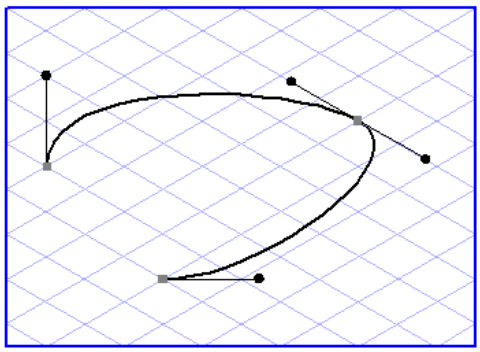

You can also delete Bézier points in another way. Do this by selecting the **Bézier** tool from the toolbox and, holding down the SHIFT key, click the point you want to delete. This option is very useful if you want to delete points during the drawing process without interrupting the active path.

Form

The form of a Bézier path is determined by its contour and fill.

The contour is defined by the pen, style and halo and by the options for the corner/end forms. These are all to be found in the **Attributes** window. The fill can be either a color or a pattern. Fill settings can be changed or redefined in the **Fills** window.

If you draw a new Bézier path, this will automatically be assigned the attributes selected in the **Attributes** and **Fills** windows at the time it is drawn.

You can change these attributes subsequently in a number of ways. Select the Bézier paths or segments you want to change. Now click the button for the required attribute, e.g. a pen, in the **Attributes** window. The window of the required attribute appears. You can now change the attribute.

Double-click a Bézier path or a selected segment to change the pen. The new pen is the switch pen of the old pen (see the **Edit pen** dialog in Show Attribute Window on page 352).

Note

When you use the ***Pens*** *window in the* ***Attributes*** *window to assign a pen, the style and halo are applied in the form they have been defined for the new pen. Whereas if you use the double-click method to change a pen the old style and halo settings are retained.*

Element Info

In element info, you can modify the point types for a Bézier path and the assignment of handles for the Bézier points. Select an image element, then choose **Element ▸ Element info**.

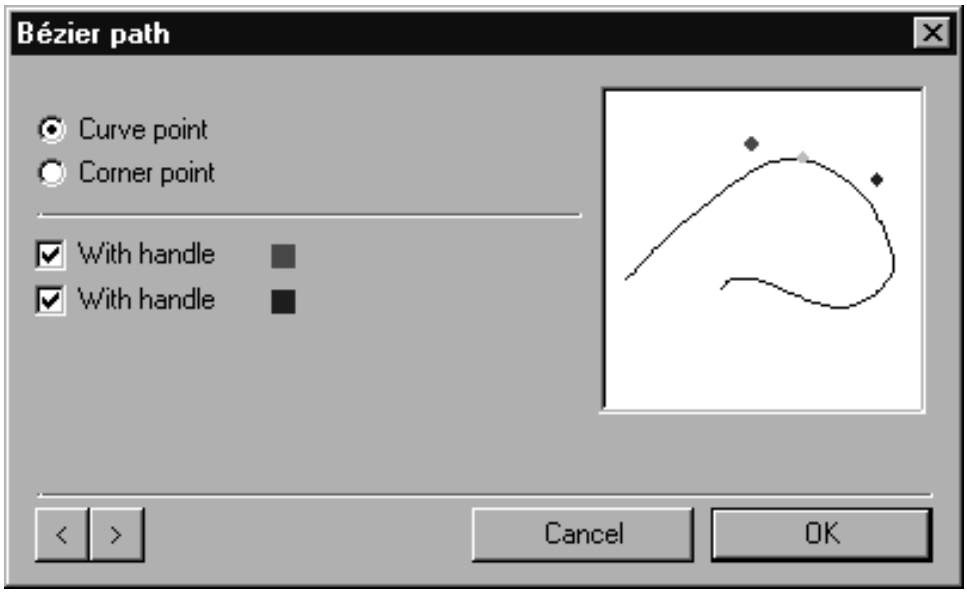

Note

The ***Element ▸ Element info*** *command can only be executed for a single element.*

You can perform changes by clicking the appropriate buttons. These changes will be displayed roughly in the preview box at the upper right.

The settings are performed separately for each Bézier point. The current Bézier point is selected in the preview box and can be changed by clicking the **Next point** or **Last point** < > buttons. The current path segment lies behind the current Bézier point.

Point Type

You can define whether the Bézier point selected in the preview box is to be a curve point or a corner point. Click the relevant button for this purpose.

Handles

This field allows you to specify the number of handles for the selected Bézier point. You can switch **With handle** on or off by clicking the appropriate button.

Note

Since curve points always need to have two handles, you can only perform this handle setting for corner points.

Quitting the Dialog Box

You can confirm your entries by clicking **OK**. Clicking the **Cancel** button quits the dialog box without applying any changes you have made.

Note

*Changing from a corner point to a curve point and deleting/adding handles can generally be performed directly using the **Bézier** tool so that you do not need to open this dialog box.*

Converting the Element

The **Element ▸ Paths ▸ Join Béziers** command allows you to convert an open Bézier path into a closed one.

The **Element ▸ Convert ▸ into polylines** command allows you to convert Bézier paths into polylines. Handles are ignored during the conversion, i.e. curve points are treated as corner points without handles.

Inner Thread

The inner thread is an ellipse filled with thread turns. The thread turns are represented by ellipse segments. There is also one special point: the thread point.

The thread point marks the end of the thread turns, i.e. it defines the depth of the thread bore. It lies on the short axis passing through the center point. The thread turns are created parallel to the outer ellipse with equidistant spacing.

As with the ellipse, the inner thread represents in part the projection of a circle onto the imaging plane. The circle in this case forms the edge of the threaded bore. As with the ellipse, the ellipse value and orientation angle which are currently set determine the display.

Differences to the Ellipse

The greatest difference between drawing an inner thread and drawing an ellipse lies in the nature of the perspective presentation. Three different inner threads (holes) can be presented on the three perspective major axes.

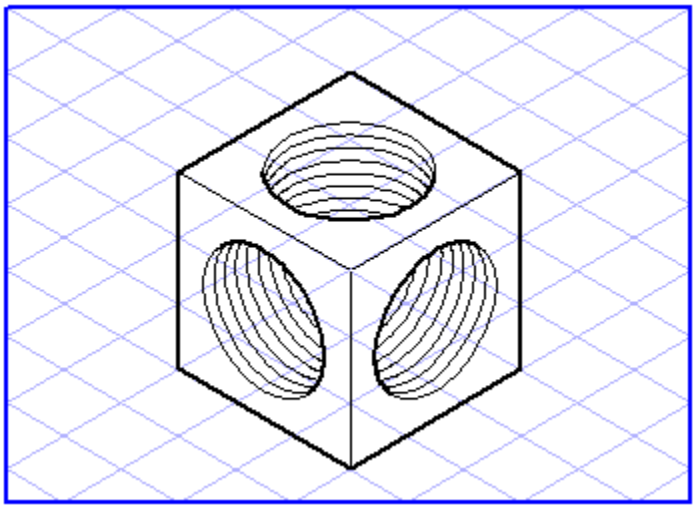

Although the outline is the same, an inner thread with an orientation of 0° differs significantly from one with an orientation of 180°.

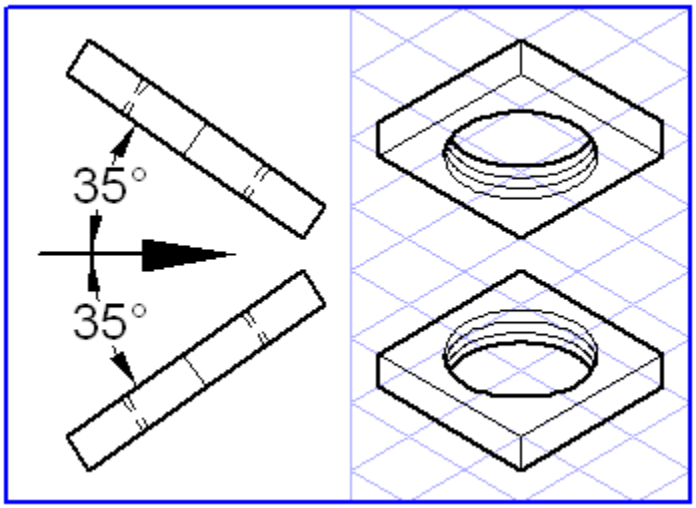

Six different orientations are therefore possible in theory, however in the vast majority of cases, only three are required for perspective illustration. These are pictured in the top row of the figure.

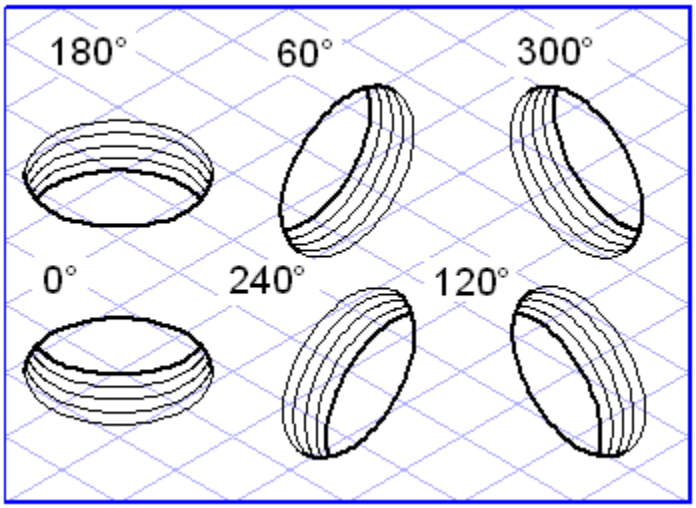

Since the inner thread shares most of the characteristics of an ellipse, the following sections only set out those areas where differences exist to the ellipse.

Generation

To draw an inner thread, select one of the two **Inner thread** tools,  or  , from the toolbox. The pointer becomes a **drawing**  cursor.

An inner thread is drawn in the same way as an ellipse. The direction in which you drag the ellipse when generating it determines the orientation angle and thus the direction of the thread turns.

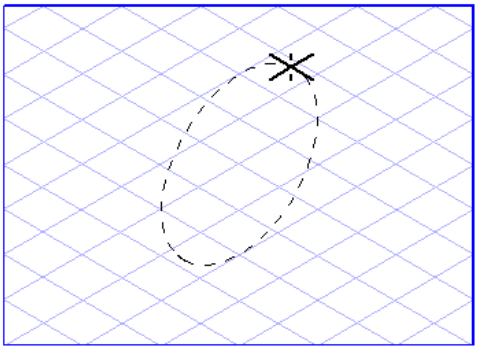

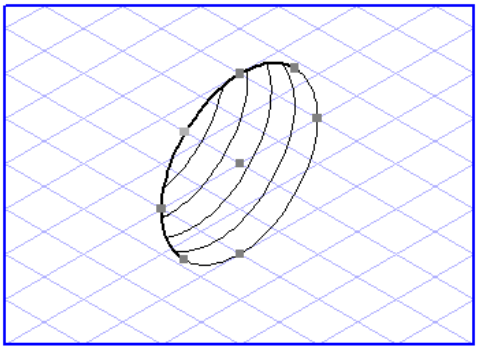

A newly generated inner thread is always filled completely with thread turns. The spacing between the turns is assigned automatically. (See the thread specifications under in Preferences on page 108.)

The depth and spacing of the thread turns can be changed subsequently.

Selecting

You can select an inner thread by clicking the area enclosed by the edge of the thread. Individual segments cannot be selected.

Modifying with the Arrow Cursor

The thread point is not magnetic, i.e. it is not attracted by other points when moved.

Thread Turns

An inner thread is filled completely with turns when it is generated. The thread depth can be lessened by reducing the number of turns shown. You can do this by moving the thread point the required amount with the **arrow** cursor. When you move the thread point, you will see an auxiliary ellipse which represents the rearmost thread turn. You can adjust the depth at any time.

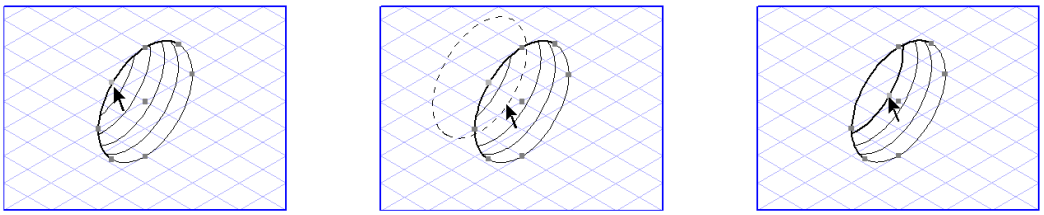

When you move the thread point with the mouse, the depth is rounded off to give you an integral number of turns. If you want a different depth, you can enter this directly in the **Element info** dialog box.

If you use the **arrow** cursor to change the diameter of an inner thread that is not filled completely with turns, the thread depth will be retained.

Form

The form of an inner thread is determined by its contour. It cannot be assigned a fill.

If you draw a new inner thread, its threaded bore - like an ellipse - is shown with standard pens **Thick** and **Thin**. The thread turns are drawn with the **Thin** pen. If the thread is not continuous, the last turn of the thread is drawn with the **Thick** pen.

In drawing mode, Arbortext IsoDraw displays the thread turns in schematic form only in order to accelerate the screen redraw process. In preview mode and in print the thread turns naturally appear in their correct form.

Note

*The **Thick** and **Thin** pens and the spacing of the thread turns are assigned automatically. If other attributes are required, these can be converted on the **Threads** preferences panel. (See Preferences on page 108) If a special attribute is to be applied in an individual case, the thread must first be converted into individual elements (see Convert on page 160).*

Element Info

In element info, you can change the diameter, value, angle and the settings of the inner thread yourself, or convert it into an ellipse or an outer thread. Select an inner thread, then choose **Element ▸ Element info**.

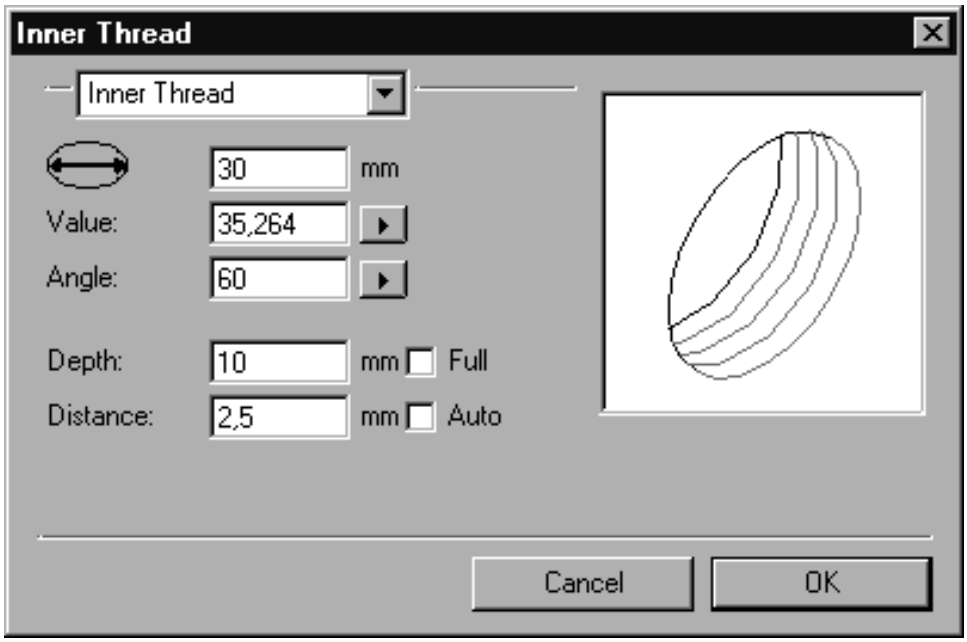

Note

*The **Element ▸ Element info** command can only be executed for a single element.*

You can perform changes by making entries in the respective fields or by making selections from the pop-up menus. These changes will be displayed roughly in the preview box at the upper right.

The entry fields for diameter, ellipse value and angle are the same as those for the ellipse (refer to Ellipse on page 502).

Depth

You can use this field to set the depth of the thread turns. If the threaded bore is filled completely with thread turns, the **Full** box is checked. If you deselect this box by clicking it, you can enter a value of your choice for the thread depth. Entries which are either too large or too small are corrected accordingly. You can restore the **Full** option by clicking the empty box.

Distance

This field can be used to enter the distance between the thread turns. If the **Auto** box is selected, the distance is set using the **Threads** preferences (see Preferences on page 108). If you clear **Auto**, you can enter a value of your choice for **Distance**.

Conversion

The pop-up menu at the top of the dialog box allows you to convert the inner thread into either an outer thread or an ellipse and to edit it as necessary without quitting the dialog box. The **Element info** dialog box changes accordingly (see Ellipse on page 502 and Outer Thread on page 532).

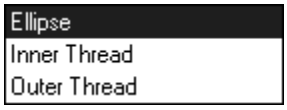

Quitting the Dialog Box

You can confirm your entries by clicking **OK**. Clicking the **Cancel** button quits the dialog box without applying any changes you have made.

Converting the Element

An inner thread can be converted into individual elements or Bézier parts using the corresponding **Element ▸ Convert** menu command.

The conversion to individual elements generates an ellipse from the threaded bore and ellipse segments from the individual thread turns. These elements are initially grouped together after being converted. You can ungroup them by means of the **Element ▸ Ungroup** command. All individual parts can then be edited separately.

The **Element ▸ Convert ▸ into Bézier parts** command converts the threaded bore and thread turns into individual Bézier curves.

Note

The elements or Bézier parts cannot be converted back to an inner thread afterwards.

Outer Thread

The outer thread consists of an ellipse and the thread turns. There is also one special point: the thread point.

The thread point marks the end of the thread turns, i.e. it defines the depth of the thread. It lies on the short axis passing through the center point. The thread turns are created parallel to the outer ellipse with equidistant spacing.

As with the ellipse, the outer thread represents in part the projection of a circle onto the imaging plane. The circle in this case forms the edge of the thread. As with the ellipse, the ellipse value and orientation angle which are currently set determine the display.

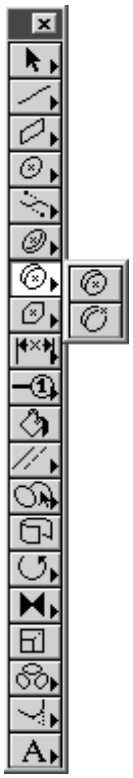

Differences to the Ellipse

The greatest difference between drawing an outer thread and drawing an ellipse lies in the nature of the perspective presentation. Three different outer threads can be represented on the three perspective major axes.

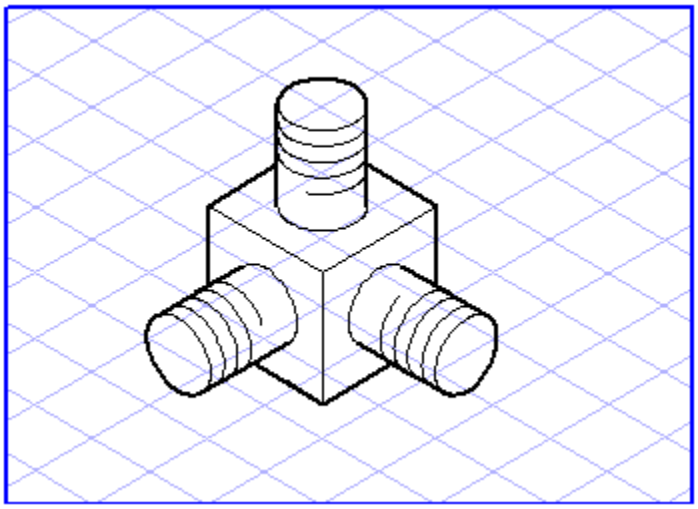

Although the outline is the same, an outer thread with an orientation of 0° differs significantly from one with an orientation of 180°.

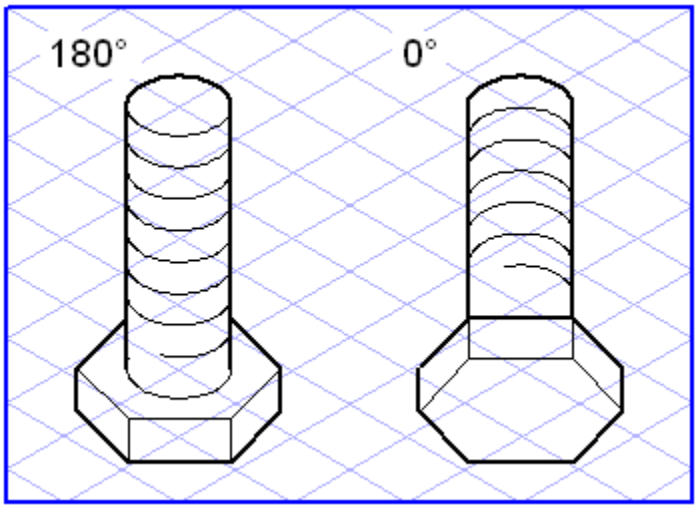

Six different orientations are therefore possible in theory, however in the vast majority of cases, only three are required for perspective illustration. These are pictured in the top row of the figure.

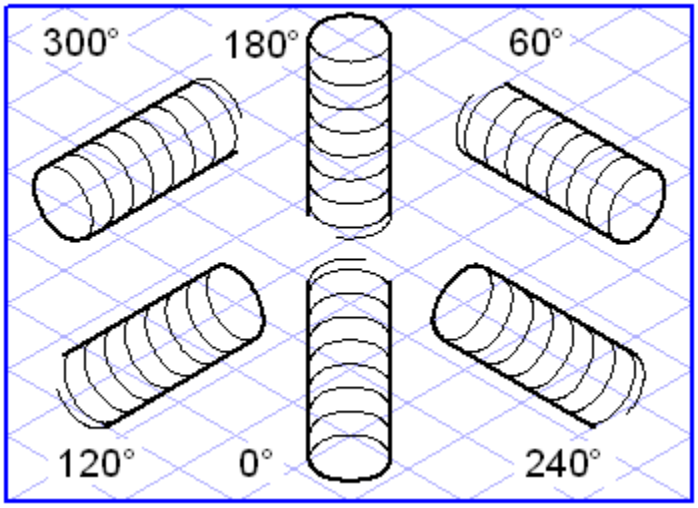

Since the outer thread shares most of the characteristics of an ellipse, the following sections only set out those areas where differences exist to the ellipse.

Generation

To draw an outer thread, select one of the two **Outer thread** tools,  or  , from the toolbox. The pointer becomes a **drawing**  cursor.

An outer thread is drawn in the same way as an ellipse. The direction in which you drag the ellipse when generating it determines the orientation angle and thus the direction of the thread turns.

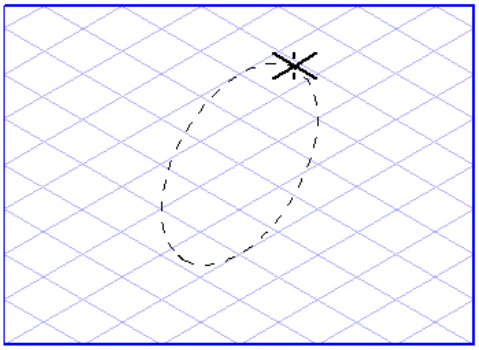

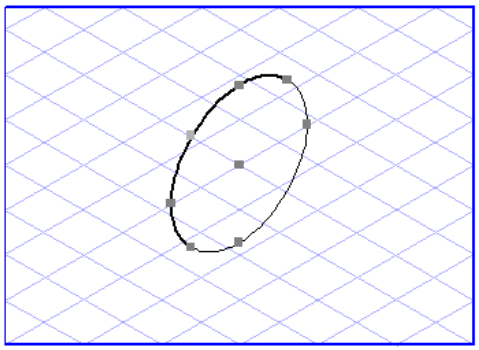

Located on the ellipse is a thread point. By dragging the thread point over the screen with the **arrow** cursor you can define the length of the thread. This length is always a whole multiple of the thread spacing. The spacing between the turns is assigned automatically (see the thread specifications in the **Threads** preferences dialog page in Preferences on page 108).

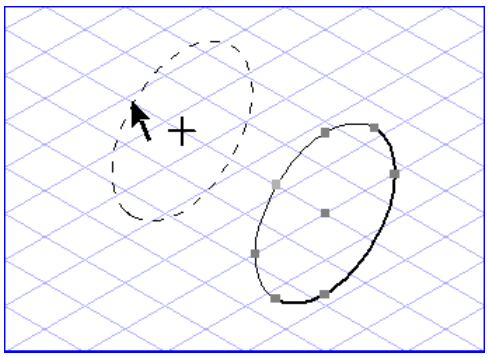

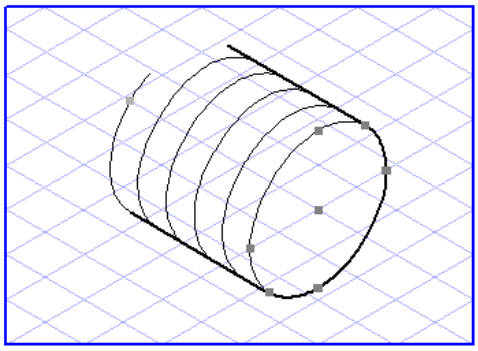

The depth and spacing of the thread turns can be changed subsequently.

Selecting

You can select an outer thread by clicking the area enclosed by the edge of the thread. Individual segments cannot be selected.

Modifying with the Arrow Cursor

The thread point is not magnetic, i.e. it is not attracted by other points when moved.

The length of an outer thread can be changed subsequently in two different ways. Click the thread point with the **arrow** cursor and move it while holding down the mouse button. Alternatively, move the ellipse representing the edge of the thread while holding down the CTRL key.

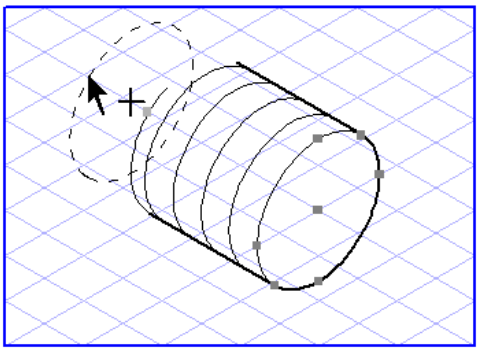

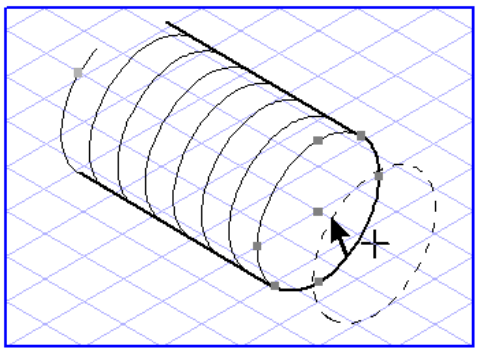

When you move the thread point with the mouse, the depth is rounded off to give you an integral number of turns. If you want a different depth, you can enter this directly in the **Element info** dialog box.

If you use the **arrow** cursor to change the diameter of an outer thread, the thread depth will be retained.

Form

The form of an outer thread is determined by its contour. It cannot be assigned a fill.

An outer thread consists of several individual elements which need to be represented in different ways depending on the orientation and alignment. In principle: The outer edges are always drawn with the **Thick** pen and the inner thread turns with the **Thin** pen.

In drawing mode, Arbortext IsoDraw displays the thread turns in schematic form only in order to accelerate the screen redraw process. In preview mode and in print the thread turns naturally appear in their correct form.

The thread edge changes in appearance if you change the thread length. Depending on the given situation, half of the thread edge is not shown.

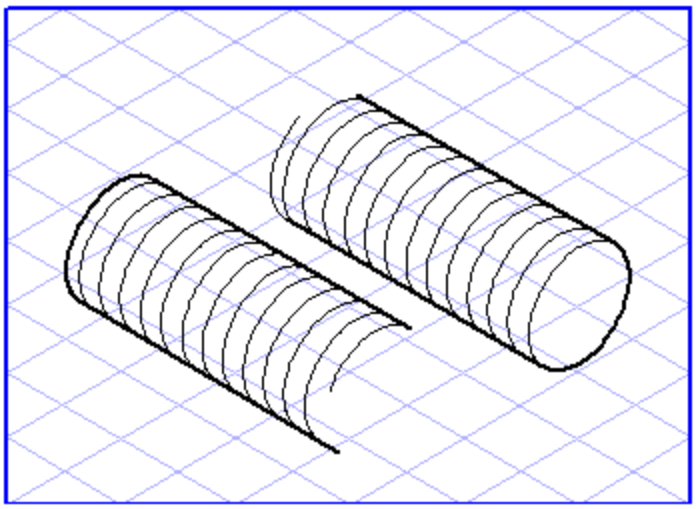

Note

*The **Thick** and **Thin** pens and the spacing of the thread turns are assigned automatically. If other attributes are required, these can be converted using the **Threads** preferences panel. (See Preferences on page 108) If a special attribute is to be applied in an individual case, the thread must first be converted into individual elements (see Convert on page 160).*

Element Info

In element info, you can change the diameter, value, angle and the settings of the outer thread yourself, or convert it into an ellipse or an inner thread. Select an outer thread, then choose **Element ▸ Element info**.

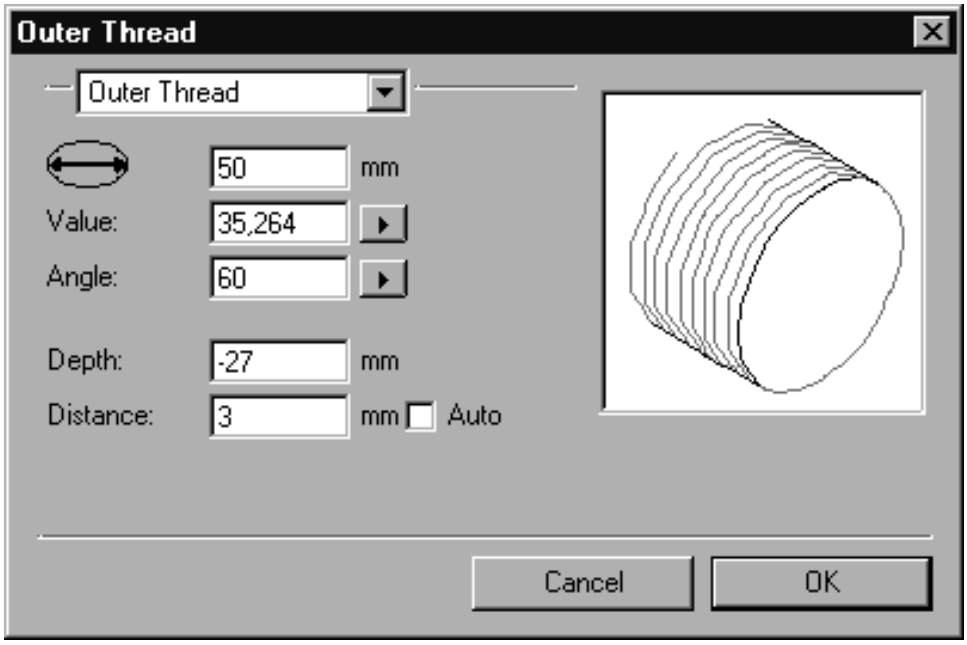

Note

*The **Element ▸ Element info** command can only be executed for a single element.*

You can perform changes by making entries in the respective fields or by making selections from the pop-up menus. These changes will be displayed roughly in the preview box at the upper right.

The entry fields for diameter, ellipse value and angle are the same as those for the ellipse (refer to Ellipse on page 502).

Depth

You can use this field to set the length of the thread. You can enter positive or negative values to reflect the direction in which the thread has been dragged and/or the direction you want to change it to.

Distance

This field can be used to enter the distance between the thread turns. If the **Auto** box is selected, the distance is set using the **Threads** preferences (see Preferences on page 108). If you clear **Auto**, you can enter a value of your choice for **Distance**.

Conversion

The pop-up menu at the top of the dialog box allows you to convert the outer thread into either an inner thread or an ellipse and to edit it as necessary without quitting the dialog box. The **Element info** dialog box changes accordingly (see Ellipse on page 502 and Outer Thread on page 532).

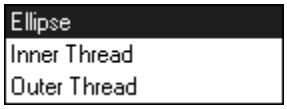

Quitting the Dialog Box

You can confirm your entries by clicking **OK**. Clicking the **Cancel** button quits the dialog box without applying any changes you have made.

Converting the Element

An outer thread can be converted into individual elements or Bézier parts using the corresponding **Element ▸ Convert** menu command.

The conversion to individual elements generates an ellipse from the thread edge and ellipse segments from the individual thread turns. These elements are initially grouped together after being converted. You can ungroup them by means of the **Element ▸ Ungroup** command. All individual parts can then be edited separately.

The **Element ▸ Convert ▸ into Bézier parts** command converts the thread edge and thread turns into individual Bézier curves.

Note

The elements or Bézier parts cannot be converted back to an outer thread afterwards.

Polygon

A polygon is composed of several corner points, the connections between these, and the center point. You can set the number of corner points.

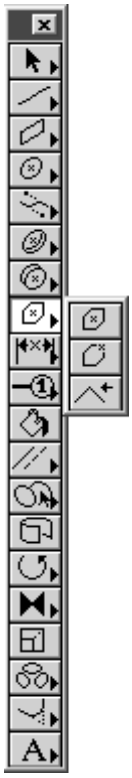

Generation

In order to draw a polygon, select one of the two **Polygon** tools,  or  , from the toolbox. The pointer becomes a **drawing**  cursor.

Use the **drawing** cursor to click the drawing area and, holding down the mouse button, drag the resulting circumscribed circle of the polygon across the screen. Release the mouse button when the resulting polygon is as you want it.

A polygon behaves like an ellipse while being drawn. For this reason, the same rules for drawing ellipses also apply when drawing polygons.

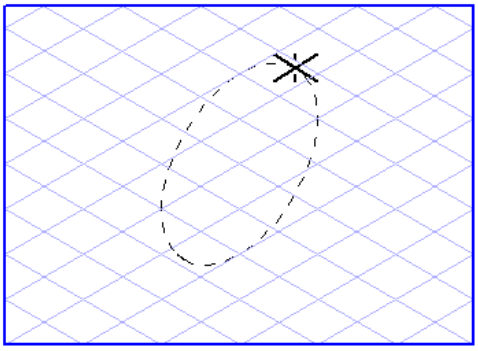

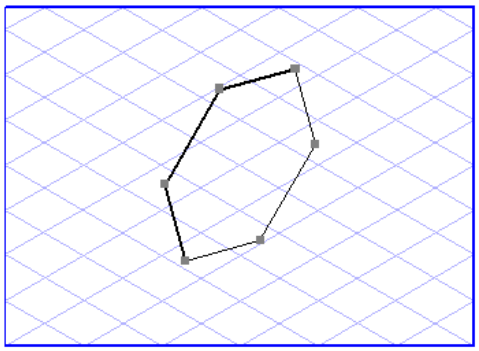

To set the number of corner points or sides, select the **Selection** tool. A dialog box appears for you to enter the required number of sides.

Grid Alignment

The orientation of the polygon depends on whether or not the grid alignment is active when the polygon is generated. If the **grid alignment** function is active, the polygon is forced into one of the three major planes of the current grid depending on the direction it is dragged in.

Without **grid alignment**, the polygon can be turned freely.

This setting can be temporarily reversed by holding down the ALT key while dragging.

The orientation and shape of a polygon depend on the direction you drag the polygon in from the start point. Different polygons are generated depending on the direction in which you drag them.

Note

Should you have difficulties in determining the orientation of a polygon, try the following technique. Click the drawing area with the ***Polygon*** *tool and, holding down the mouse button, move the cursor in a circular pattern. You will see how the orientation and the shape of the displayed circumscribed circle change.*

Grid Snap and Element Snap

You generate a polygon by dragging it either from the center point or from a vertex, depending on the tool you choose. The start and end points can be attracted by neighboring grid or element points. Whether or not they are attracted depends on the current setting of **Grid Snap** and **Element Snap**.

The **Grid Snap** setting can be temporarily reversed by holding down the CTRL key while dragging.

Show Dynamic Dimensions on the Element

If the **Show Dynamic Dimensions** option has been activated, the diameter of the circumscribed circle is displayed while the polygon is dragged.

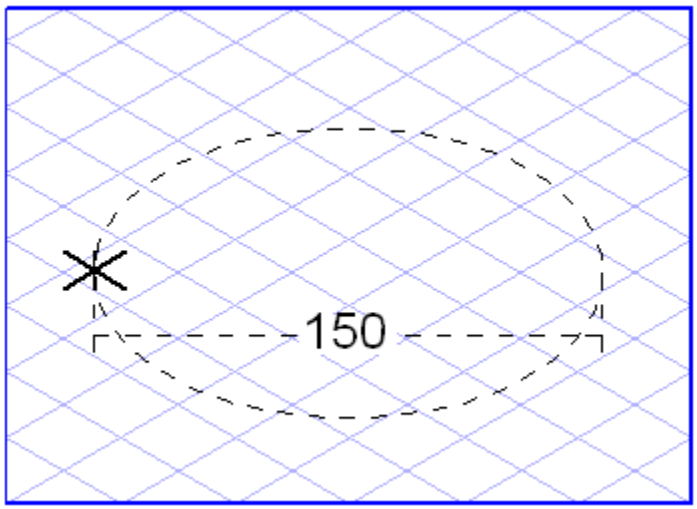

Displaying Dimensions in the Dimensions Bar

When the polygon is dragged, the dimensions bar shows three dimensions relating to the circumscribed circle. The dimensions indicate the **diameter**, **ellipse value** and **orientation angle** of an ellipse (in this order).

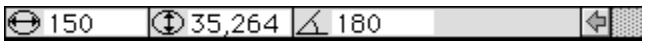

When you release the mouse button, the display fields show a maximum of three dimensions for the last polygon segment drawn. These dimensions indicate the length, **true length** and **orientation angle** of a line (in this order).

If the polygon has been selected, you can change every dimension directly in these fields. The fact that changes to dimensions only affect the last segment should be borne in mind when making changes. Confirm your entry with the ENTER key. If you do not confirm your entry, Arbortext IsoDraw will confirm it automatically after a few seconds. Use the TAB key to move from one field to another.

Use the **Element info** dialog box to change the dimensions of the other polygon segments.

Selecting

You select a polygon by clicking the **arrow** cursor on its contour or center point.

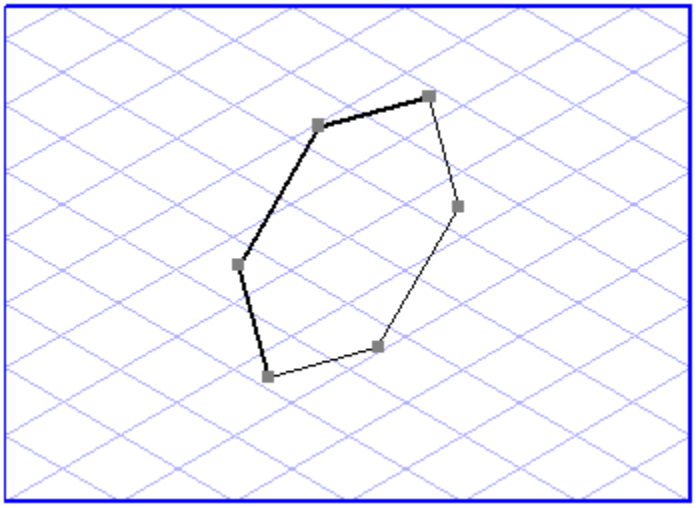

Alternatively, you can select individual sides of the polygon. Hold down the ALT key, while clicking the relevant side.

Modifying with the Arrow Cursor

You can use the **Arrow cursor** tool to move a polygon anywhere within your drawing by clicking on its contour (not the corner points) or its center point and by moving it to a new position while holding down the mouse button.

By holding down the SHIFT key during this operation, you can restrict the direction in which the polygon is moved to the major axes of the current grid and the horizontal axis.

If grid snap or element snap has been activated, the element points snap to the nearest points.

You can change the length and orientation of individual segments by clicking an element point and then moving it to a new position. The two neighboring segments of the point which is moved will change in the process.

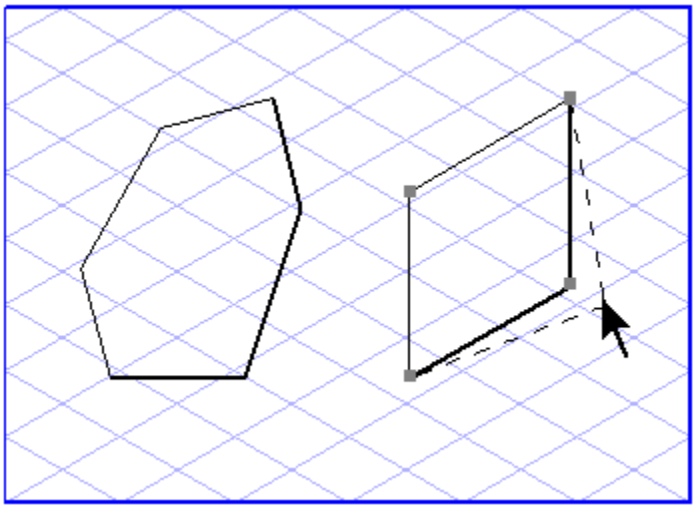

In the same way as when you generate polygons, the settings for grid snap, element snap, and grid alignment are also applied when you perform these changes.

It is possible to retain the direction of a line segment by holding down the SHIFT key while you move the point to a new position.

Form

The form of a polygon is determined by its contour and fill.

The contour is defined by the pen, style and halo and by the options for the corner/end forms. These are all to be found in the **Attributes** window. The fill can be either a color or a pattern. Fill settings can be changed or redefined in the **Fills** window.

If you draw a new polygon, it is automatically assigned an equal mixture of the **Thick** and **Thin** standard pens. The **Thick** pen is used from the start point (in counter-clockwise direction) up to the end point, while the **Thin** pen is used from the end point back to the start point. In a perspective illustration, this form of representation involving two inner and two outer edges is appropriate in most applications. Consequently, the automatic assignment of **Thick** and **Thin** is not governed by the pen you have already selected.

If a halo has been set, it is only used on the half of the polygon which has been drawn with the **Thick** pen. The style, the corner/end forms and the fill are generated automatically from the current attributes selected in the **Attributes** and **Fills** windows.

You can change these attributes subsequently in a number of ways. To do this, select the segments or the sides you want to change. Now click the button for the required attribute, e.g. a pen, in the **Attributes** window. The window of the required attribute appears. You can now change the attribute.

Note

If you assign a pen to a polygon you have selected, this pen will be applied uniformly to all the sides. The different line thicknesses set initially will be lost as a result.

The fill of a polygon can also be changed without having to select the elements (see Show Fill Window on page 408).

Double clicking a polygon or a side you have selected changes the pen. The new pen is the switch pen of the old pen (see the **Edit pen** dialog in Show Attribute Window on page 352). This feature allows you, for example, to reverse the distribution of inner and outer edges, i.e. of **Thick** and **Thin**, with ease.

Note

*When you use the **Pens** window in the **Attributes** window to assign a pen, the style and halo are applied in the form they have been defined for the new pen. Whereas if you use the double-click method to change a pen the old style and halo settings are retained.*

Element Info

In element info, you can change the length and angle of the sides of a polygon. Select a polygon, then choose **Element ▸ Element info**.

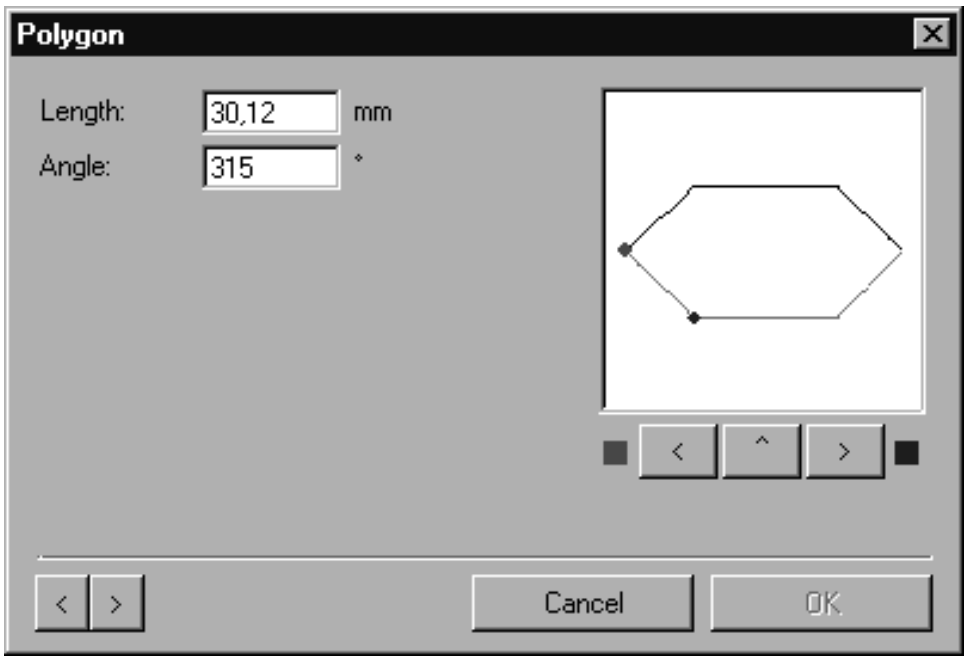

Note

*The **Element ▸ Element info** command can only be executed for a single element.*

You can perform changes by making entries in the respective fields. These changes will be displayed roughly in the preview box at the upper right.

The current side is already selected in the display field and you can switch to the next or last segment by clicking the **Next segment** and **Last segment** buttons respectively. The changes you make are always applied to the selected side.

Length and Angle

As with a polyline, you can also change the length and angle of individual sides of polygons. The method for doing this is the same in both cases.

Since, however, the orientation of the sides almost always leads to awkward angles, this is not the best way to change a polygon. The display function for the angles and lengths is, however, useful if you want to use these dimensions for other purposes.

The values displayed correspond to the lengths which you can verify in the printout.

Note

The dimensions displayed while you are drawing correspond to the unforeshortened values along the major axes.

Quitting the Dialog Box

You can confirm your entries by clicking **OK**. Clicking the **Cancel** button quits the dialog box without applying any changes you have made.

Converting the Element

You can use **Element ▸ Convert ▸ into elements** to convert polygons into individual lines. These lines are initially grouped together after being converted. You can edit the lines individually once they have been ungrouped by executing **Element ▸ Ungroup**.

Note

A polygon is automatically converted into lines or polylines if you delete individual sides.

You can use the **Element ▸ Convert ▸ into Bézier parts** command to convert a polygon into a Bézier path.

Note

The single lines or the Bézier path cannot be converted back into the former polygon.

10
Dimension

Using the four **Dimension** tools, you can easily add a dimension to an illustration in the same way as to a technical drawing. The leader lines, dimension arrows and the dimension itself are generated automatically.

Dimensioning is primarily required for drawings in a flat view. Along with the option of overwriting the defaulted dimension in the dialog box, there are also further options for using the tools. Setting dimensions and text information can be added to illustrations for e.g. operating instructions very easily indeed.

Depending on what you want to add a dimension to, the following four dimension tools are available to you: **Dimension, linear**, **Dimension, angle**, **Dimension, radius**, and **Dimension, diameter**.

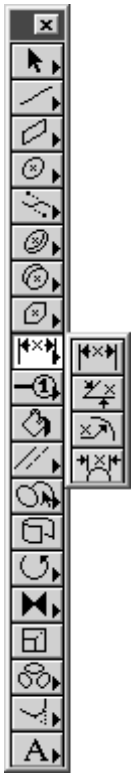

Dimension, Linear

You can use this tool to add a dimension to the distance between two freely selectable points. In the simplest case, a dimension can be generated between the start and end points of a line. Because you can freely select the starting points for the dimension, you can define any dimension on the line connecting the start and end points of an element. A dimension that includes multiple elements can also be generated.

The alignment of the leader lines depends on the grid currently set. These leader lines are always dragged parallel to the major axes. The text element is also oriented in accordance with the current grid. The two examples that follow show the difference in the alignment in relation to the grid used.

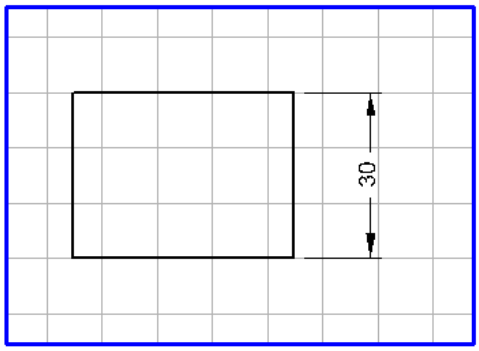

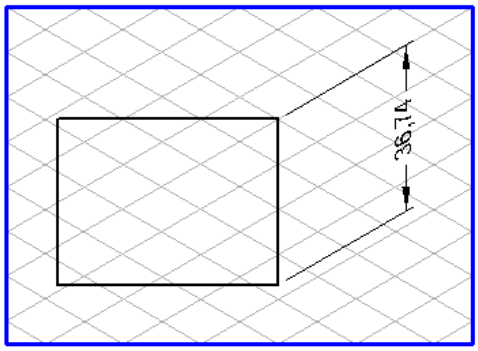

Select the **Dimension, linear** tool from the toolbox. The pointer becomes an **arrow(1)** cursor. This means that you should now select the position for the start point of the dimension. Click on the required point on the element. When you have hit the element, the pointer becomes an **arrow(2)** cursor, thereby requesting you to select the position for the end point of the dimension. Select the point by clicking it and holding down the mouse button.

The example shows the steps involved in defining a dimension:

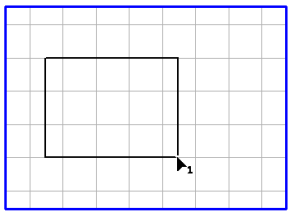

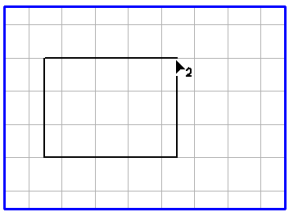

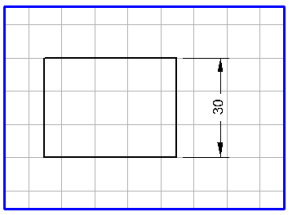

Now, when you move the mouse, you can see the leader lines, the dimension arrows and the dimension itself. Drag the leader lines until they are at the required distance from the elements of the drawing.

When you release the mouse button, the following dialog box will appear:

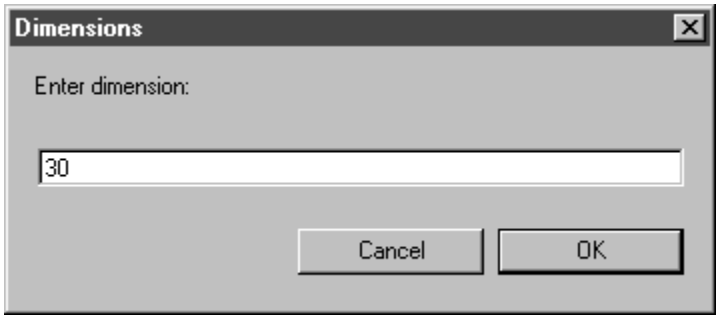

The dimension, as determined by Arbortext IsoDraw, is shown in the entry field. Clicking on **OK** confirms the preference. If you want to enter another dimension or some text, click in the entry field and enter your data. Then confirm with **OK**. If you click on **Cancel**, the dimension generation process will be aborted.

When you exit the dialog box with **OK**, the dimension appears on the drawing. All the elements associated with the dimension (leader lines, dimension arrows and the text element) are grouped. If you want to edit individual elements later, you must first ungroup the elements using **Element** ▸ **Ungroup**.

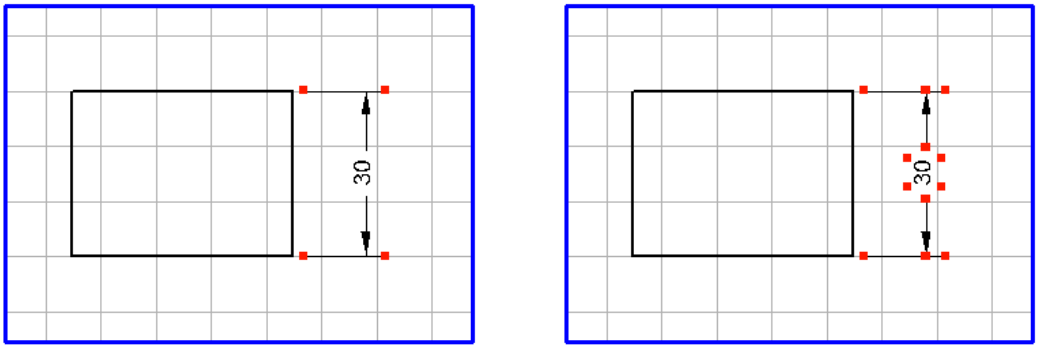

The direction in which the leader lines are dragged depends on the order in which you select the two dimension points.

When you select the dimension points with the **arrow(1)** cursor, then the **arrow(2)** cursor—from left to right/from bottom to top—the leader lines are dragged downwards/to the right. When selecting from right to left/top to bottom, the leader lines point upwards/to the left.

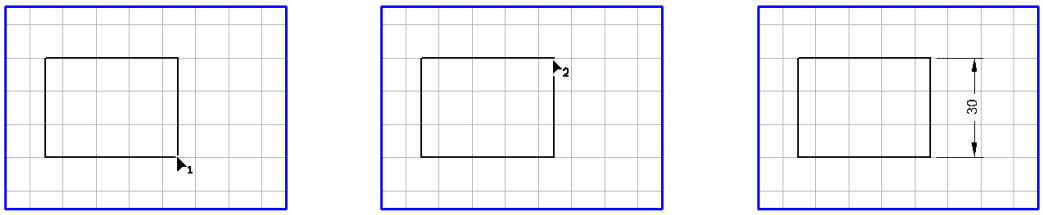

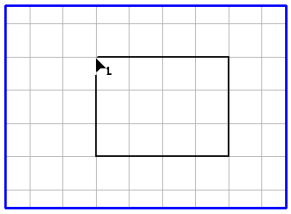

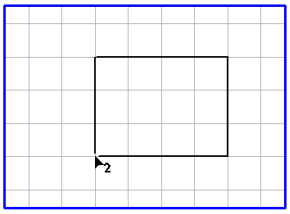

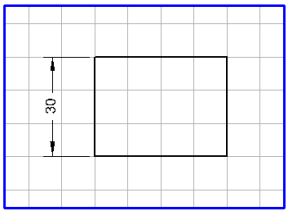

If you hold down the SHIFT key while dragging the leader lines, their direction is reversed.

If a dimension is to relate to element points, the cursor must contact the element points. Element points have a magnetic effect thanks to the magnetic radius. The element points are always contacted when you click inside the magnetic radius. The magnetic radius is set on the **Grid** preferences panel under **Edit** ▸ **Preferences**. (See Preferences on page 108.)

The appearance of the leader lines, dimension arrows and dimension (text element) depends on the preferences that have been set. With the menu command **Edit** ▸ **Preferences**, you can set the pen attributes and the different distances for the leader lines and dimension arrows on the **Dimensions** preferences panel. You can select the font, set the number of decimal places and define the vertical distance to the dimension arrows. This vertical distance determines whether one or two dimension arrows are generated.

Dimension, Angle

This tool can be used to add dimensions to the angle between two elements. On a technical drawing, it is often necessary to add dimensions to a chamfer on the work piece. In this case, you must draw a leader line as a second element before adding dimensions.

The generated dimension arrows depend on the grid which is currently set. In one view, the dimension arrows are generated from a circle. If there is a perspective grid in the background, the dimension arrows are created from the ellipse in one of

the three major planes. Moving the mouse makes the auxiliary ellipse jump to the next major plane. The orientation of the text is adapted to match the orientation of the ellipse.

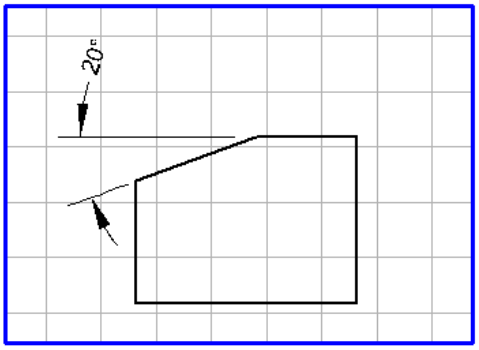

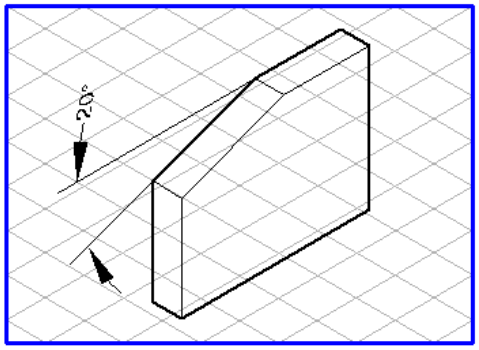

If you hold down the ALT key when the auxiliary ellipse appears, the latter can be freely rotated, as with an **Ellipse** element. The orientation of the displayed dimension changes with the orientation of the ellipse. You can use this function for optimum alignment of the dimension arrows relative to the reference elements when adding dimensions to a perspective drawing.

Select the **Dimension, angle** tool from the toolbox. The pointer changes to an **arrow(1)** cursor. This indicates that you should now select the first element of the angle. Click on the first element for the angle. When you have hit the element, the pointer changes to an **arrow(2)** cursor, thereby requesting you to select the second angle element. Select the element by clicking it and hold down the mouse button.

The example shows the steps involved in defining an angle dimension. The leader lines have already been drawn:

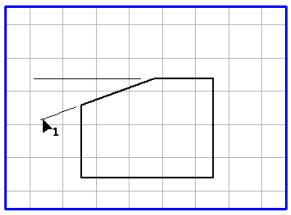

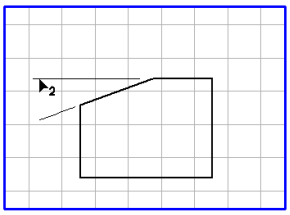

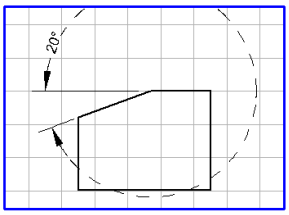

When you move the mouse, you will see the outline of an auxiliary circle with the dimension arrows and the angle dimension. Drag the circle to the required orientation for the dimension arrows.

When you release the mouse button, the following dialog box will appear:

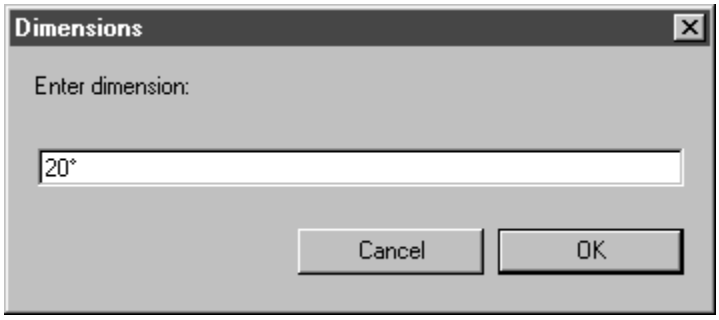

The dimension, as determined by Arbortext IsoDraw, is shown in the entry field. Clicking on **OK** confirms the preference. If you want to enter another dimension or some text, click in the entry field and enter your data. Then confirm with **OK**. If you click on **Cancel**, generation of the angle dimension will be aborted. This vertical distance determines whether one or two dimension arrows are generated.

When you exit the dialog box with **OK**, the angle dimension appears on the drawing. All the elements associated with the dimension (dimension arrows and the text element) are grouped. If you want to edit individual elements later, you must first ungroup the elements using **Element ▸ Ungroup**.

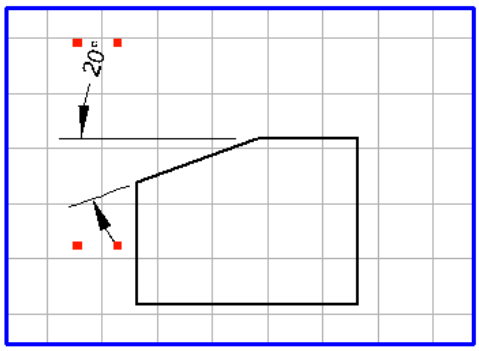

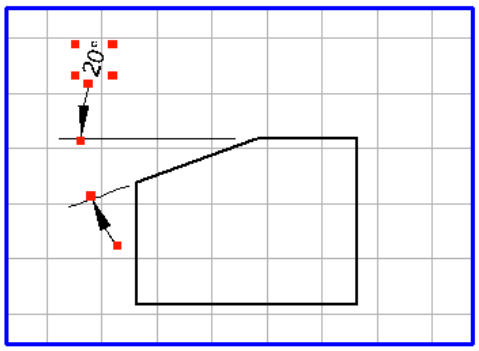

The angle dimension between the elements clicked on in succession (sides of the angle) is always generated. When the circle or ellipse appears with the dimension arrows after clicking on the elements and you hold down the SHIFT key, the explementary angle is generated.

without SHIFT key

with SHIFT key

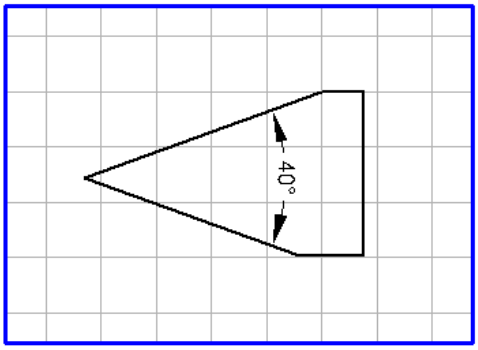

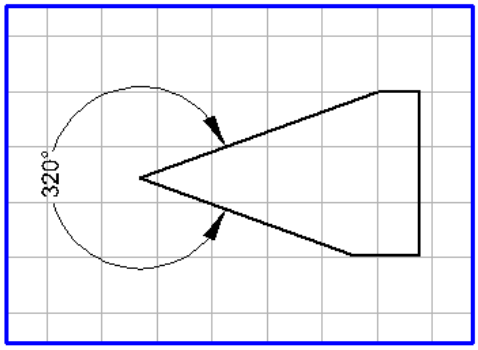

The appearance of the dimension arrows and the dimension (text element) depends on the preferences that have been set previously. With the menu command **Edit ▸ Preferences**, you can set the pen attributes for the dimension arrows on the **Dimensions** preferences panel. You can select the font, set the number of decimal places and define the vertical distance to the dimension arrows.

Dimension, Radius

You can use this tool to add dimensions to a circle, ellipse or any segment with a radius.

The generated dimension arrow points to the element from outside. When the dimension arrow appears, it is located in one of the three major axes of the grid. With a movement of the mouse, the dimension arrow jumps to the next axis. The orientation of the text is shown in accordance with the set grid and the orientation of the dimension arrow.

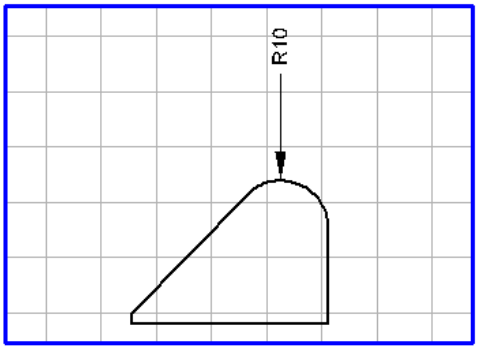

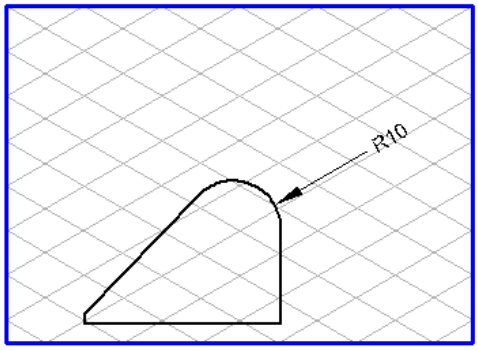

If you hold down the ALT key when the dimension arrow appears, the latter can be freely rotated around the contour of the element. The orientation of the text element depends on the orientation of the dimension arrow. You can use this function for optimum alignment of the dimension arrow relative to the reference element.

Select the **Dimension, radius** tool from the toolbox. Click on any point on the element that you want to add a dimension to. Hold down the mouse button.

In this example, a dimension is added to a rounded edge:

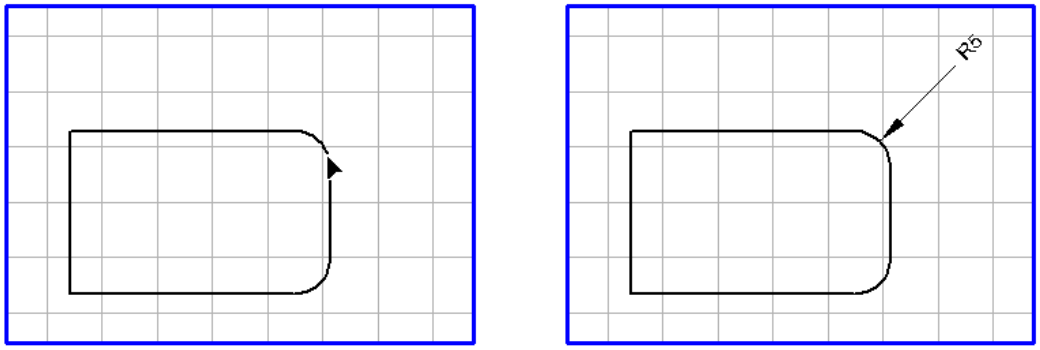

If you now move the mouse, the dimension arrow appears along with the dimension. Drag the dimension arrow until it reaches the required length and find the best position for the dimension by freely rotating it.

When you release the mouse button, the following dialog box will appear:

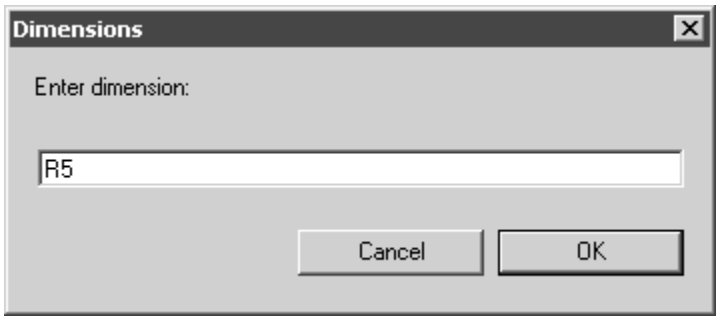

The dimension, as determined by Arbortext IsoDraw, is shown in the entry field. Clicking on **OK** confirms the preference. If you want to enter another dimension or some text, click in the entry field and enter your data. Then confirm with **OK**. If you click on **Cancel**, dimension generation will be aborted.

When you exit the dialog box with **OK**, the dimension appears on the drawing. The elements relating to the dimension (dimension arrows and the text element) are grouped. If you want to edit individual elements later, you must first ungroup the elements using menu command **Element ▸ Ungroup**.

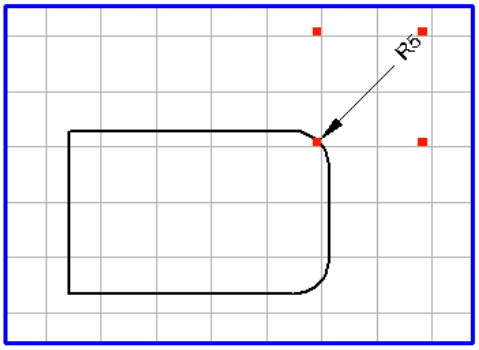

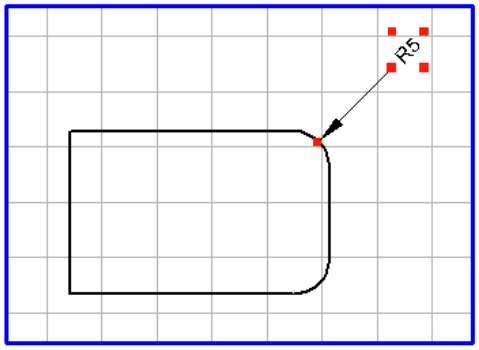

The appearance of the dimension arrows and the dimension (text element) depends on the preferences set previously. With menu command **Edit ▸ Preferences**, you can set the pen attributes for the dimension arrows in the **Dimensions** preferences panel. You can select the font, set the number of decimal places and define the vertical distance to the dimension arrows.

Dimension, Diameter

You can use this tool to add dimensions to a circle, ellipse or any segment of these elements with a diameter.

The generated dimension can lie inside the element with the dimension arrows or outside the element with additional leader lines as with the **Dimension, linear** tool. The leader lines are dragged parallel to the grid axes. When the dimension arrows/ leader lines appear, they are located in one of the three major axes of the grid. With a movement of the mouse, they jump to the next axis. The orientation of the text is shown in accordance with the orientation of the circle/ellipse which dimensions are being added to.

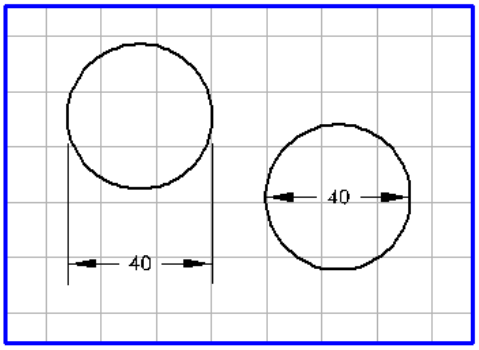

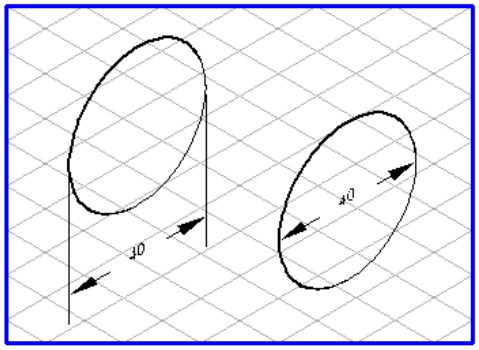

If you hold down the ALT key when the dimension arrows/leader lines appear, the dimension arrow can be freely rotated within the contour of the element. The leader lines outside the element can also be freely rotated around the contour. The orientation of the displayed dimension changes with the orientation of the dimension arrows/leader lines. You can use this function for optimum alignment of the dimension position relative to the reference element.

Select the **Dimension, diameter** tool from the toolbox. Click on any point on the element that you want to add a dimension to. Hold down the mouse button.

In this example, a dimension is added to a bore:

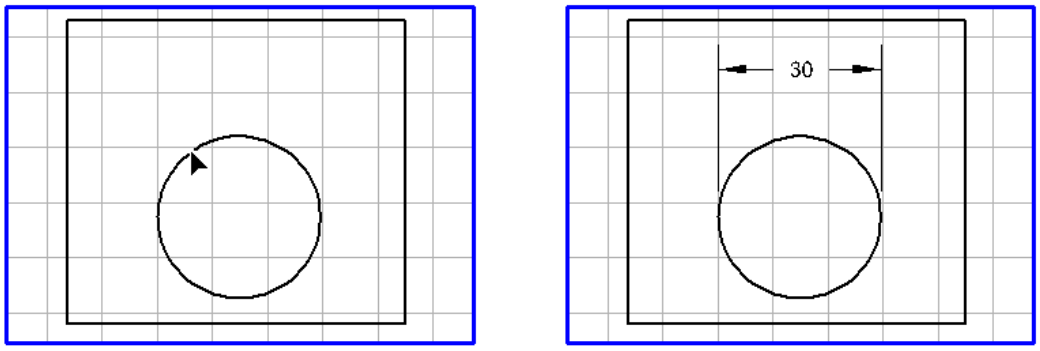

Move the mouse. When the cursor is inside the element, you will see the dimension arrows along with the dimension. When you move the cursor outside the element, the leader lines also appear. Move the cursor to the position where the chosen dimension is required and find the optimum dimension position by freely rotating the dimension.

When you release the mouse button, the following dialog box will appear:

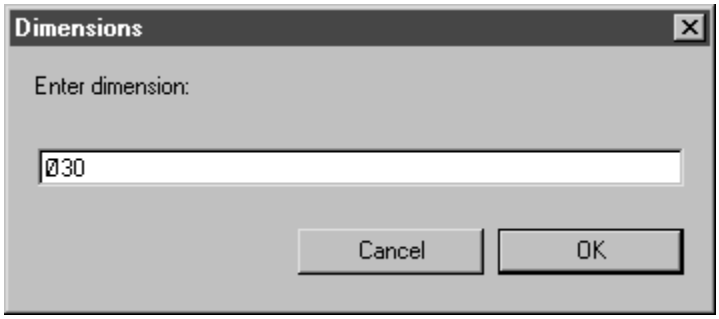

The dimension, as determined by Arbortext IsoDraw, is shown in the entry field. Clicking on **OK** confirms the preference. If you want to enter another dimension or some text, click in the entry field and enter your data. Then confirm with **OK**. If you click on **Cancel**, dimension generation will be aborted.

When you exit the dialog box with **OK**, the dimension appears on the drawing. The elements relating to the dimension (leader lines, dimension arrows and the text element) are grouped. If you want to edit individual elements later, you must first ungroup the elements using menu command **Element ▸ Ungroup**.

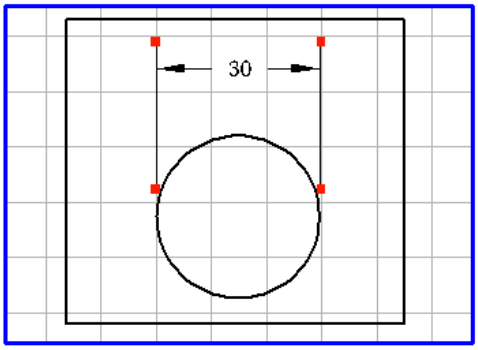

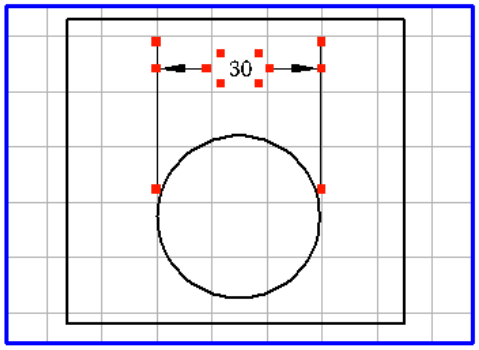

The appearance of the leader lines, the dimension arrows and the dimension (text element) depends on the preferences set previously. With menu command **Edit ▸ Preferences**, you can set the pen attributes and the different distances for the leader lines and dimension arrows in the **Dimensions** preferences panel. You can select the font, set the number of decimal places and define the vertical distance to the dimension arrows. This vertical distance determines whether one or two dimension arrows are generated.

11
Callout

Use the Callout tools in the Palette Window Toolbox to manually create or renumber callouts, or to connect callouts to objects in your drawing.

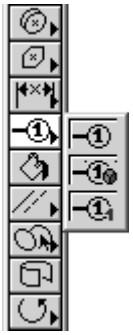

About Callout Tools

- Use the **Callout** tool to create new Callout elements. (See Creating a Callout on page 561.)
- Use the **Renumber callouts** tool to manually renumber automatically-numbered callouts. (See Changing the Numbering for Callouts Manually on page 566.)
- Use the **Connected callout** tool to connect Callout objects to other objects in the drawing. (See Callouts Connected to Objects on page 568.)

About Callout Objects and Connected Callouts

Callouts you create manually with the **Callout** tool are Callout elements. A Callout element must be converted to a Callout object before you can connect it to a drawing object using the **Connected callout** tool.

To convert a Callout element to a Callout object, add object information to it, the same as you would if you were converting a graphical element to an graphical object. (See Object Info on page 223.)

Note

Automatically-created callouts are created as Callout objects that are connected to drawing objects.

About Callout Styling

You can change the text and graphical attributes of selected callouts in the **Callout** element info dialog box. (See Callout Element Info on page 565.) In addition, if you select a connected Callout object, you can view its **Connected Objects** properties in the **Callout** element info dialog box as well.

You can use the **Callouts** window in the attribute window to apply a predefined callout style (a named set of callout text and graphical attributes) to selected callouts. You can also create and edit callout styles in the **Edit callout style** dialog box available from the **Callouts** window menu. (See Show Attribute Window on page 352).

Creating a Callout

A Callout element consists of a group of three individual elements – the text element, the frame around the text element, and the leader line.

Select the **Callout** tool from the toolbox. Click on the point on the drawing area at which the callout element is to be placed or the point where it is to start. When you release the mouse button after clicking, the text element appears with the frame. If, instead of this, you click with the drawing cursor on the drawing area and drag the line as it becomes visible, you will create a callout element with leader line. Different callout styles are required for each of the two examples (see Show Attribute Window on page 352).

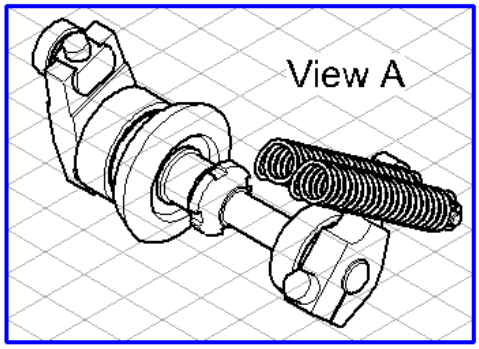

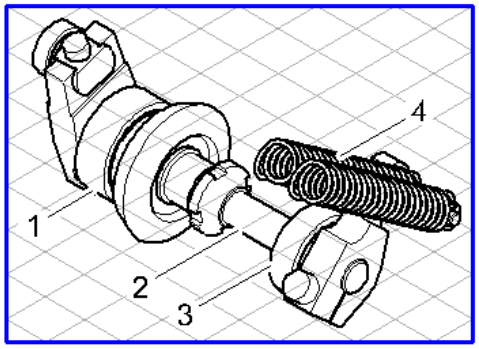

Grid Alignment

The orientation of a callout element with leader line depends on whether or not grid alignment is switched on when the element is created. If the **Grid alignment** function is active, the callout element is forced into one of the three major planes of the current grid depending on the direction it is dragged in.

Without **Grid alignment**, the callout element can be rotated freely.

This setting can be temporarily reversed by holding down the ALT key while dragging.

Grid Snap and Element Snap

Start points of leader lines can be attracted by neighboring grid or element points. Whether or not they are attracted depends on the current setting of **Grid snap** and **Element snap**.

The **Grid snap** setting can be temporarily reversed by holding down the CTRL key while dragging.

Show Dynamic Dimensions on the Element

If the **Show Dynamic Dimensions** option has been activated, length information is displayed for callout leader lines as they are being dragged. If the line is located on one of the major axes of the current grid or in the horizontal plane, the length of the line will be displayed. If this is not the case, two dimensions will be displayed – namely, the lengths along the two major axes involved.

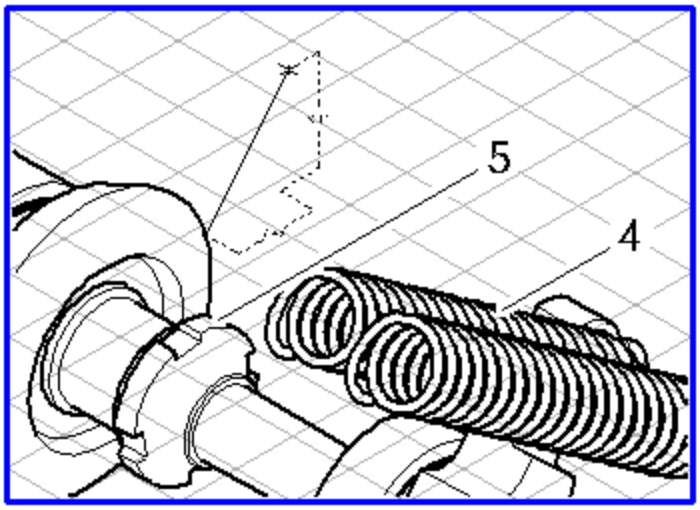

Displaying Dimensions in the Dimensions Bar

The dimensions bar shows a maximum of three dimensions when a leader line is dragged. The first field shows the length of the leader line without perspective foreshortening. No dimension will be displayed if the leader line lies outside the major axes of a parallel perspective. The second field shows the actual length of the leader line, i.e. the **true length**. The third field indicates the **orientation angle** of the leader line relative to the horizontal.

Selecting a Callout

You select a Callout element by clicking its contour with the **arrow** cursor. If there is no leader line, the text element is selected. If there is a leader line, the leader line is selected.

Modifiying Callouts

You can change the leader line later. Click on the text element with the selected **Callout** tool. If you hold down the mouse button, you can extend the leader line. You can add segments as often as you like. This option enables you to create multi-section leader lines.

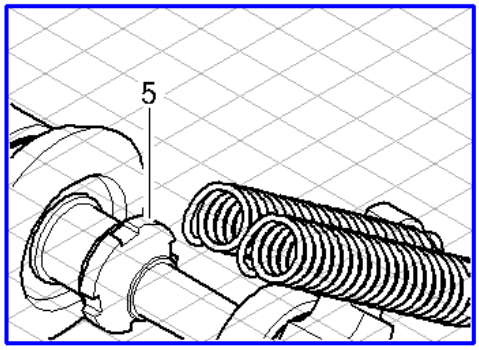

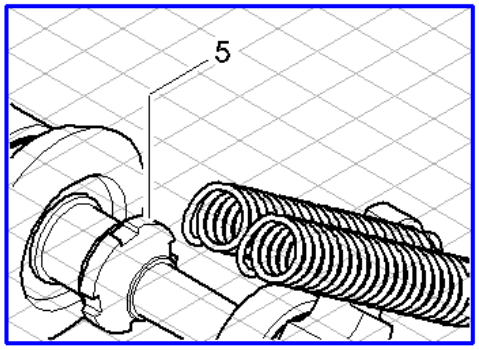

If you have created a callout element without a leader line, you can add a leader line later by clicking on the text element.

Modifying Callouts with the Arrow Cursor

Moving Callouts

You can move a Callout element anywhere in your drawing with the **Arrow cursor** tool by first selecting the element and then moving it to a new position while holding down the mouse button.

If you hold down the SHIFT key during this process, the direction in which you can move the element is restricted to the major axes of the current grid and the horizontal axis.

When grid snap or element snap is switched on, the element points snap to the nearest element or grid points.

Changing Leader Line Length and Orientation

You can change the length and orientation of a leader line by clicking on one of the red element points and moving it, while holding down the mouse button, to a new position.

In the same way as when you generate callouts with a leader line, the settings for grid snap, element snap, and grid alignment are also applied to any changes you make.

It is possible to retain the direction of a leader line by holding down the SHIFT key while you move the end point of the leader line to a new position.

Deleting Callouts

When you delete a callout, the following message window appears:

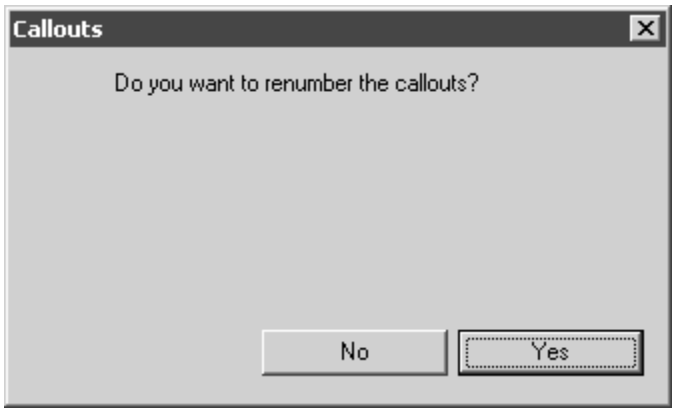

Here you are asked if you want to reassign the callout entry that has been rendered redundant by the deletion of the callout. If you click **No**, the remaining callouts stay unchanged. If you click **Yes**, the numbering of all callouts with this **callout style** is updated. The entry for the deleted callout is reassigned.

Form

The form of a callout element is determined by the style that has been assigned. You can change styles and define new styles in the **Callout** window. This can influence the three individual elements (reference line, text element and text frame).

When you create a new callout element, this element is automatically assigned the style selected at this time in the **Callout** window.

Callout Element Info

You can change the style of a callout by selecting it, then choosing **Element ▸ Element Info** . This opens the **Callout** window. You can overwrite the style options shown in the **Callout** window.

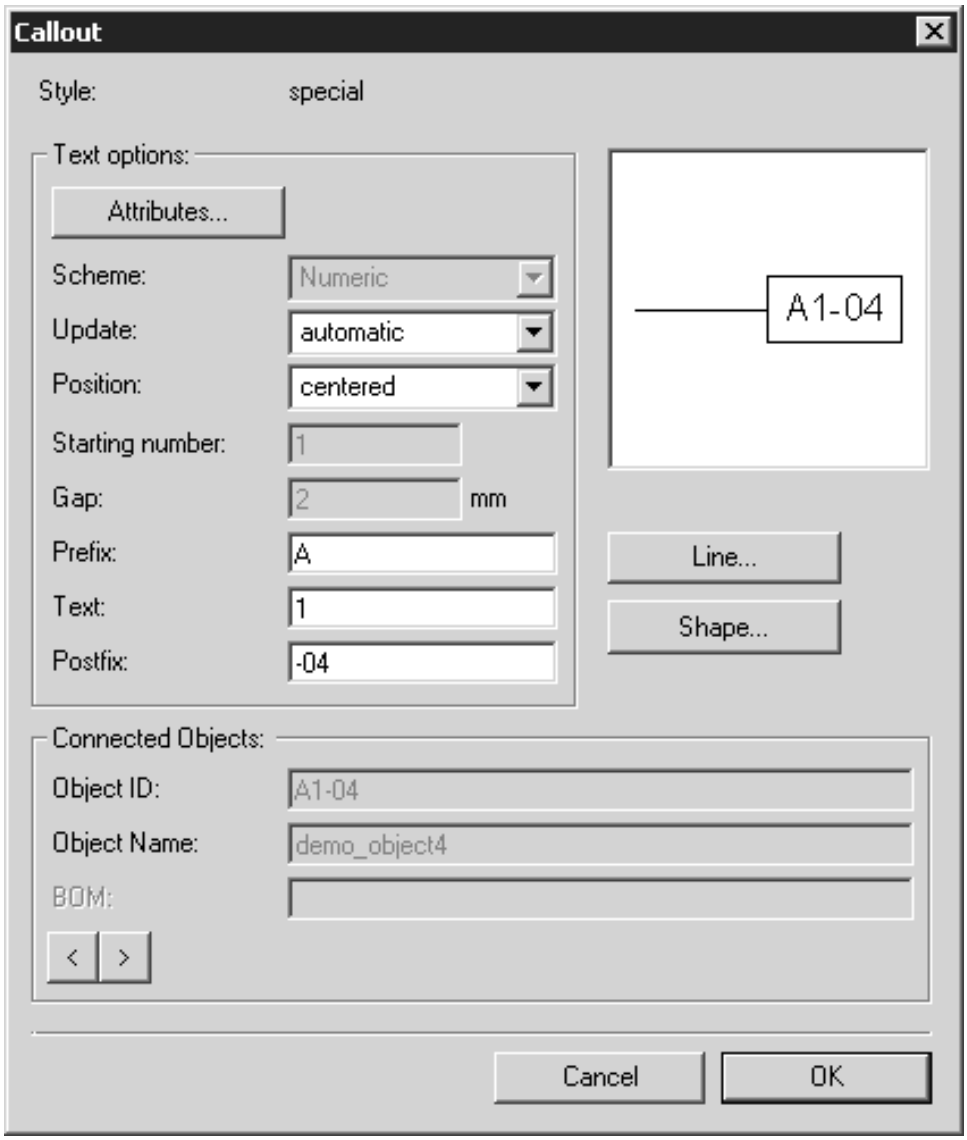

Note

*The **Element ▸ Element info** command can only be executed for a single element.*

You can perform changes by making selections or entries in the respective fields. These changes will be displayed roughly in the display window at the upper right.

Quitting the Dialog Box

You can confirm your entries by clicking **OK**. Clicking the **Cancel** button quits the dialog box without applying any changes you have made.

Converting the Callout Element

Callout elements can be converted into their individual elements using the **Element ▸ Convert ▸ into elements** command.

At first, the individual elements are grouped together. You can edit the elements individually once they have been ungrouped by executing the **Element ▸ Ungroup** command.

Note

If a callout element is ungrouped into individual elements, the callout functionality is lost.

Changing the Numbering for Callouts Manually

The **Renumber callouts** tool allows you to manually change the **automatic numberingscheme** within the set scheme (numbers, letters). You can set individual number entries to a value outside the current numbering scheme.

If you want to change individual entries, select the **Renumber callouts** tool from the toolbox.

Click on the text element where you want to change the numbering. A small red `1` appears on the text element. If you hold down the SHIFT key and click on the next element, a red `2` appears on the element. When you click on the next element, a red `3` appears on it. You can thus define the numbering for all callouts with the same callout style as required. The current numbering, the elements selected with the tool and the new numbering are shown underneath from left to right.

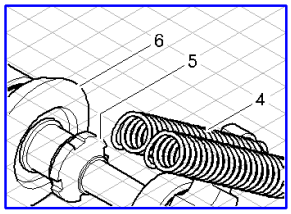

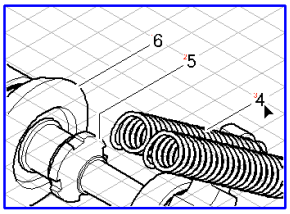

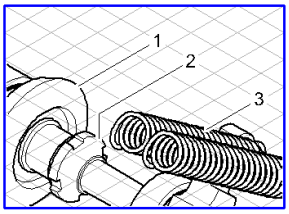

If you hold down the ALT key while clicking a text element, the same red number appears as for the previous element. Callouts that have the same red selection numbers will subsequently have the same entry.

If you then click on the free drawing area, the following dialog box appears:

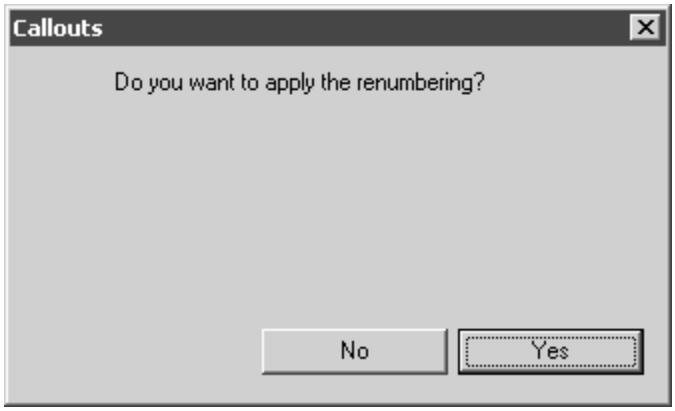

If you click **No**, the numbering is not updated. If you select **Yes**, the numbering is updated in accordance with the sequence you have chosen.

Changing Entries with the Arrow Cursor

For each callout, you can change the numerical entry as required within the defined scheme. Identical entries are also possible.

Select the **Arrow cursor** tool. Select a callout.

The entries can be incremented or decremented using the specified key combinations. This applies for both numerical and the letter-based patterns.

Key Combinations

When you press the key combination CTRL+UP ARROW, the numbering will be incremented by one. The combination CTRL+DOWN ARROW decrements it by one.

If you also hold down the SHIFT key, the change will be plus or minus five respectively.

Number increments by one;	CTRL+UP ARROW
Number decrements by one:	CTRL+DOWN ARROW
Number increments by five:	CTRL+SHIFT+UP ARROW
Number decrements by five:	CTRL+SHIFT+DOWN ARROW

When you have changed callout entries in this way, you can then continue to apply the numbering functions as described, using the **Renumber callouts** tool.

Callouts Connected to Objects

Callouts can be connected to the objects they point to and vice-versa. The connection between callouts and objects is both logical, based on an internal object/callout link list, and graphical, based on the anchor point of the callout leader line.

Connected callouts and connected objects look like regular callouts and objects, but they behave differently. For example, if you:

- Drag a connected object, the leader lines of all callouts connected to the object move with it. (See Moving Objects with Connected Callouts on page 569.)
- Cut or copy connected objects or callouts, then paste them, their object/callout links will be broken. To link them, reapply the object/callout connection procedure. (See Editing Objects with Connected Callouts on page 570.)
- Right-click a connected callout, and then click **Select connected objects** from the context menu—you select all objects that are connected to that callout.

You can create connected callouts manually by drawing, or, generate them automatically from an object list.

- To create connected callouts manually, use the **Connected callout** tool to:
  - Draw connected callouts for selected objects.
  - Connect an unconnected Callout object to an object in the drawing.

  (See Drawing Connected Callouts on page 571.)
- To create connected callouts automatically, use the **Generate callouts for objects** command in the **Objects** window menu with **Link callouts to objects** selected. This command can generate connected callouts for:
  - All objects in the illustration.
  - All objects in a list you import into (**Place** in) the illustration.

  (See Generating Connected Callouts Automatically on page 573 and Generate Callouts for Objects on page 433.)

A connected callout and the object it is connected to must be on the same layer. If you connect a callout to an object on a different layer, the callout is moved to the object's layer after they are connected.

Moving Objects with Connected Callouts

The leader lines of connected callouts can move with the objects they are connected to when you drag the objects. The move behavior depends on whether or not your object selection includes the connected callout's "reference object." The reference object is the first object you selected when you created the connected callout.

Note

You can select multiple objects to connect to when you create a connected callout. However, the existing callout's leader line will only attach to the reference object. So, if you want the leader line to move with a particular object, be sure to select that object first.

Connected callout-to-object move behaviors are described below for the one-to-one, one-to-many, and many-to-many cases. These behaviors describe how connected callouts leader lines move when you drag objects connected to them. You can, of course, select both connected callouts and objects and then drag them, just as you would unconnected callouts and objects.

Moving one object connected to one callout

When you drag one object that only has one connected callout, the anchor point of the callout leader line moves with the object while its callout text frame remains stationary.

Moving multiple objects connected to one callout

When you drag a selection of objects, some or all of which are connected to a callout, and the selection:

- Includes the connected callout's reference object: the anchor point of the callout leader line moves with the reference object while its callout text frame remains stationary.
- Does not include the reference object: the anchor point of the callout leader remains stationary (as does the callout text frame).

Moving multiple objects connected to multiple callouts

When you drag a selection of objects, some or all of which are connected to one or more callouts, and the selection:

- Includes one or more reference objects for the connected callouts: the anchor points of the callout leader lines move with their reference objects while their callout text frames remain stationary.
- Does not include any reference objects: the anchor points of all callout leaders remain stationary (as do the callout text frames).

Editing Objects with Connected Callouts

You can edit an object with connected callouts and get the same results as if the object did not have connected callouts. However, some editing actions will also affect the object's connected callouts.

Transforming Objects with Connected Callouts

If you transform (e.g., rotate or scale) an object with connected callouts, the callout leader line anchor points remain fixed.

Note

If you drag or ***Move*** *an object with connected callouts, the callout leader lines move with the object. (See* *Moving Objects with Connected Callouts on page 569.**)*

Pasting Objects with Connected Callouts

If you cut or copy connected objects or callouts, then paste them, their object/callout links will be broken. To link them, reapply the object/callout connection procedure:

1. Click the **Connected callout** tool.
2. Click the object(s).
3. Click the callout text.

Changing Layers for Objects with Connected Callouts

Objects and their connected callouts can be on different layers. This enables you to, for example, create a layer for callouts that you can make visible or invisible.

To move connected objects or callouts to a different layer without breaking their object/callout links, use the **Selection to active layer** command on the **Layer** menu in the **Attributes** window.

Drawing Connected Callouts

To draw connected callouts for selected objects, use the **Connected callout** tool. (See Callout on page 559.)

Note

The first object you select when creating a connected callout is the "reference object" for that callout. (See Moving Objects with Connected Callouts on page 569.)

1. Open a file with one or more objects.

   ### *Note*

   Drawing elements must have object information assigned before you can connect callouts to them.

2. Select the **Connected callout** tool. If no objects are selected, the pointer becomes an object selection arrow.
3. Select the object or objects you want to connect the callout to. You can:
   - Click an object in the drawing area.
   - Click an object ID or object name in the **Objects** window tree.
   - SHIFT-click to add objects to the current selection.
   - CTRL-click a selected object to select its parent object.
   - (For objects directly below the current layer only): Use the **Arrow cursor** tool to drag a selection rectangle or ALT-drag to lasso objects in a selection area.
4. After you select objects, the pointer becomes an isometric symbol.

   If you want to change your selection:

   a. Press ESC; the pointer changes back to an object selection arrow.
   b. Select objects again as described in Step 3.
5. While the pointer is an isometric symbol, draw the connected callout:

   a. Click to set the callout leader line's anchor point location.
   b. Drag to set the length and direction of the leader line.

c. Release the mouse button to set the callout text frame location. Releasing without dragging creates a callout text frame with no leader line.

Note

You can select multiple objects to connect to before you draw the connected callout. However, the new callout's leader line will only attach to the reference object. So, if you want the leader line to move with a particular object, be sure to select that object first. (See Moving Objects with Connected Callouts on page 569.)

6. When you finish creating a connected callout, the pointer becomes an object selection arrow again. To create another connected callout, repeat this procedure starting at Step 3 above.

Connecting Existing Callouts to Objects

To connect existing (connected or unconnected) callouts to graphical objects, use the **Connected callout** tool. (See Callout on page 559.)

Note

The first object you select when creating a connected callout is the "reference object" for that callout. (See Moving Objects with Connected Callouts on page 569.)

1. Open a file with one or more objects and existing (connected or unconnected) callouts.

   Note

   Existing callouts and drawing elements must both have object information assigned before you can connect them.

2. Select the **Connected callout** tool. If no objects are selected, the pointer becomes an object selection arrow .
3. Select the object or objects you want to connect the existing callout to. You can:
   - Click an object in the drawing area.
   - Click an object ID or object name in the **Objects** window tree.
   - SHIFT-click to add objects to the current selection.

- CTRL-click a selected object to select its parent object.
- (For objects directly below the current layer only): Use the **Arrow cursor** tool to drag a selection rectangle or ALT-drag to lasso objects in a selection area.

4. After you select objects, the pointer becomes an isometric symbol.

   If you want to change your selection:

   a. Press ESC; the pointer changes back to an object selection arrow.
   b. Select objects again as described in Step 3.

5. While the pointer is an isometric symbol, click inside the text frame of an existing (connected or unconnected) callout. This connects all selected objects to that existing callout. (No new callout is created.)

   Note

   You can select multiple objects to connect to before you click the existing callout's text frame. However, the existing callout's leader line will only attach to the reference object. So, if you want the leader line to move with a particular object, be sure to select that object first. (See *Moving Objects with Connected Callouts on page 569.)*

6. When you finish creating a connected callout, the pointer becomes an object selection arrow again. To create another connected callout, repeat this procedure starting at Step 3 above.

Generating Connected Callouts Automatically

You can generate connected callouts automatically for all graphical objects in:

- The illustration.
- An object list in an XML file.
- A BOM (bill of material) in a placed XML file.

Assign object information to elements before you attempt generate connected callouts for them. You can only generate callouts for objects in a placed XML-BOM file that is structurally valid.

1. Open an illustration that contains objects you want to generate connected callouts for.
2. In the **Window** menu, click **Show object window**.

3. In the **Objects** dialog box, click the arrow button to open the menu and then click **Generate callouts for objects**.
4. In the **Create callouts** dialog box under **Object or group selection** in the **Create callouts** list, click **only for objects**, **for list**, or **for BOM**.
5. If you selected **for list** or **for BOM**, click the **File** button to the right of the **Create callouts** list to select either:
   - A callout file in the **Select a callout file** dialog box
   - An XML BOM file in the **Select a BOM file** dialog box

   Click **OK** to select the file and close the dialog box.
6. In the **Create callouts** dialog box under **Object or group selection**, select the **Link callouts to objects** check box.
7. (Optional if you selected **only for objects** or **for list** in the **Create callouts** list): Select the **Only visible objects** check box to generate connected callouts for visible objects only.
8. Change any other callout or object settings as needed in the **Create callouts** dialog box (see Generate Callouts for Objects on page 433) and then click **OK**. Arbortext IsoDraw generates connected callouts for all specified objects.

12
Bucket

The **Bucket** tool lets you fill areas which are bordered by elements or parts of elements.

Arbortext IsoDraw can assign fills to elements such as ellipses, rectangles, Bézier paths or polygons. However, you will often need to fill an area which is bordered by more than a single element. In this case, you will need to generate an element which follows the precise contour of this area. This element, known as a Bézier path, can then be given the required fill.

No elements have been selected. Select the color or pattern you want for your fill from the **Fills** window. Select the **Bucket** tool. The pointer becomes a **bucket** cursor. Click the area you want to fill.

A Bézier path is generated which encloses the area. It lies in front of all other elements and has the fill you selected from the menu. You can change this fill subsequently in the same way that you can change any other element. Place this element in the background so that you can see the contour of the original elements.

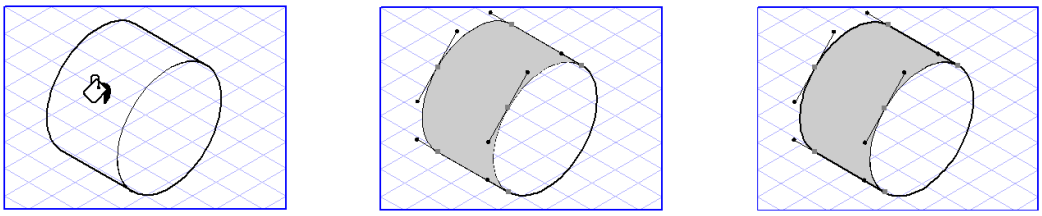

This tool will help your work significantly when generating fills. You may find, however, that some fills are not generated as you intended. In these cases, check that there are no gaps between the individual elements.

Note

If you are unable to generate the fill, you can use the ***Join Béziers*** *or* ***Join Polylines*** *functions from the* ***Element*** *menu to generate the path.*

13

Parallel Paths

The **Parallel paths** functions will help you generate paths at a specified distance from the original elements. You can choose between a **Single parallel path** and a **Double parallel path**. The tool at the bottom of this menu is the **Blend** tool.

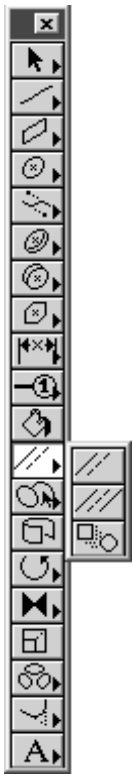

Note

Parallels can be generated for lines, rectangles, ellipses, Bèzier paths and polygons.

Single Parallel Path

This tool lets you generate parallels for selected elements.

Select the element(s) you want to generate parallels for. Select the **Single parallel path** tool from the toolbox. The pointer becomes an arrow tip. Click one of the selected elements with the mouse button. Hold down the mouse button and move the mouse away from the element you have clicked on. When you move the mouse you will be able to see how the parallel path will look. When you release the mouse button, Arbortext IsoDraw will generate the path.

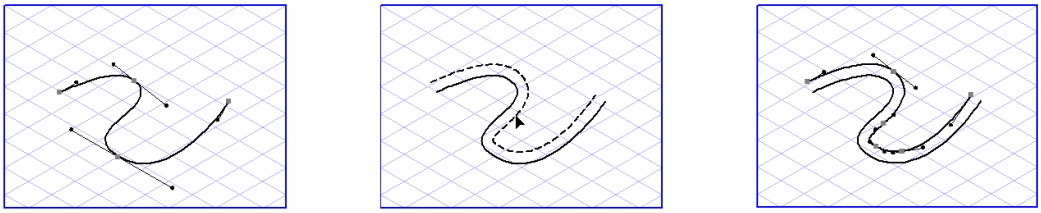

If you want to maintain a specific distance (offset), hold down the SHIFT key while you click the original element. The following dialog box appears:

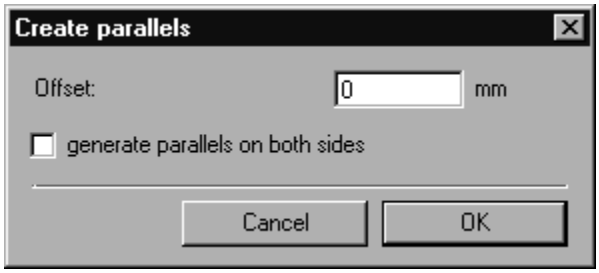

Enter a value for the offset. If you want to generate parallels on both sides of the original elements, select **generate parallels on both sides**. Confirm with **OK**.

Parallels will be generated on one or both sides of the original elements depending on your inputs.

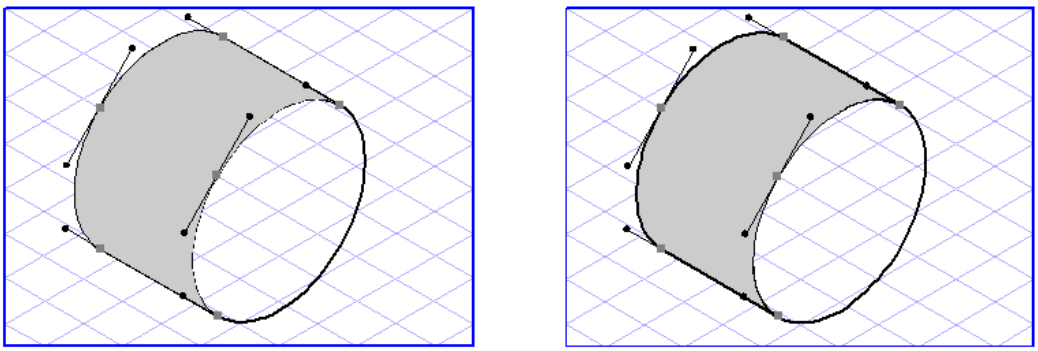

Double Parallel Path

This tool allows you to generate parallels on both sides of selected elements.

Select the element(s) you want to generate parallels for. Select the **Double parallel path** tool from the toolbox. The pointer becomes an arrow tip. Click one of the selected elements with the mouse button. Hold down the mouse button and move the mouse away from the element you have clicked on. When you move the mouse you will be able to see how the parallel paths will look. When you release the mouse button, Arbortext IsoDraw will generate the paths. At the same time the original elements will be deleted. This provides you with a very easy way of drawing a cable beginning from a center line.

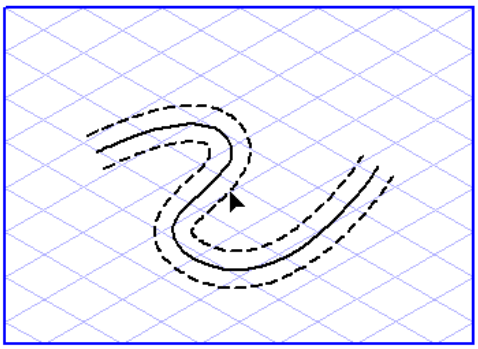

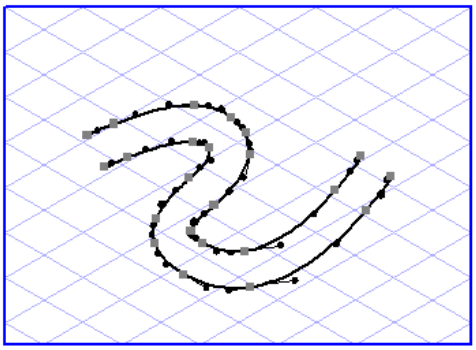

If you want to maintain a specific distance (offset) or want to retain the original elements, hold the SHIFT key down while you click the element. The same dialog box used for single parallel paths will appear:

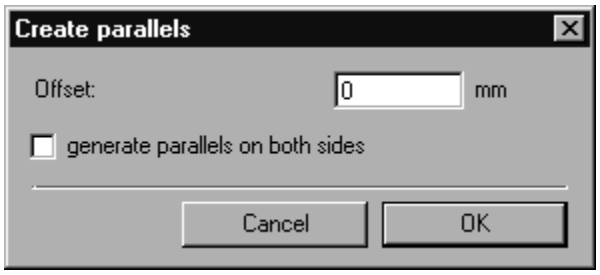

Enter a value for the offset. If you want to generate parallels on both sides of the original elements, select **generate parallels on both sides**. Confirm with **OK**.

Parallels will be generated on one or both sides of the original elements depending on your inputs.

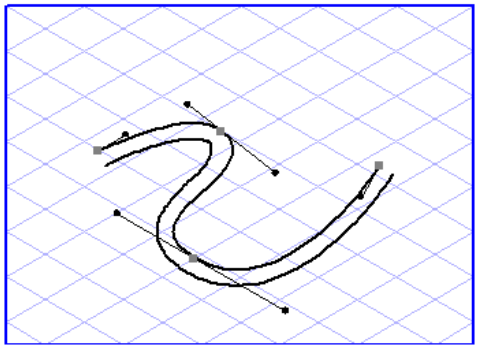

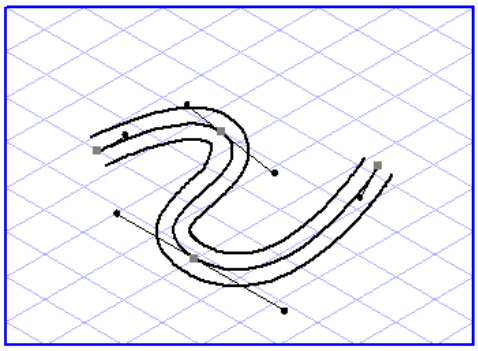

Blend Tool

You can use the **Blend** tool to generate elements between two Bèzier paths, the form and fill of these elements being blended from one path to another.

To do this, select the **Blend** tool from the toolbox. The pointer becomes an **arrow(1)** cursor. Click the end point of one path. The pointer changes to an **arrow(2)** cursor. Now click the end point of the second path.

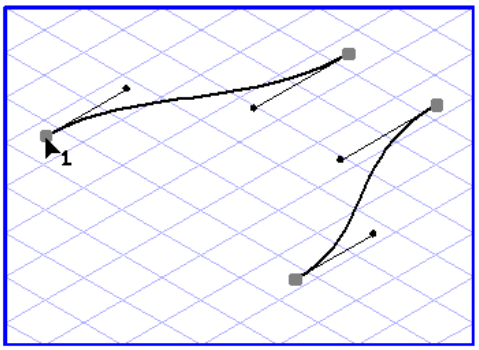

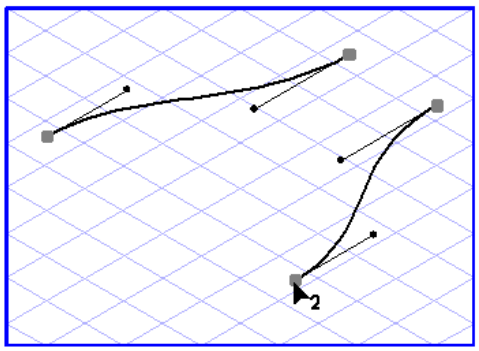

The following dialog box appears:

Use this window to enter the number of intermediate steps you want to generate. Confirm with **OK** to generate the elements.

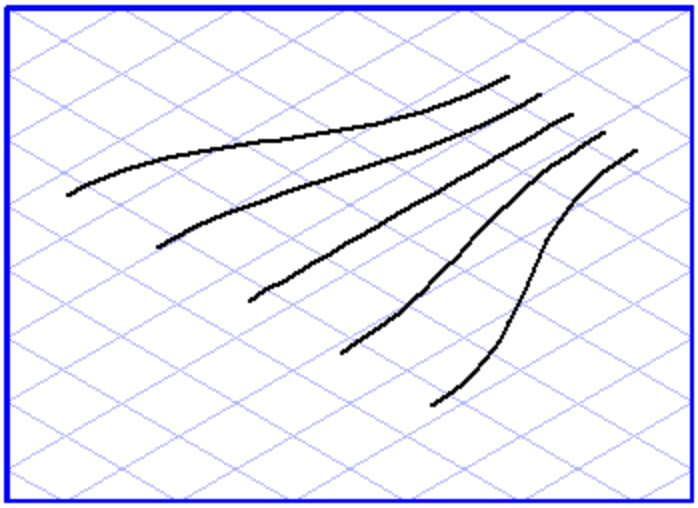

In this case, only the form of the elements changes. If the paths have fills, you can generate interesting graphical effects.

Draw two circles as shown in the illustration and convert them into Bèzier paths. Select both paths and choose **No pen** from the **Pens** window in order to remove the contour. Now set the fill for the large circle to black in the **Fills** window. Select white for the small path.

Select the **Blend** tool from the toolbox and click the marked points one after the other. Enter 100 for the number.

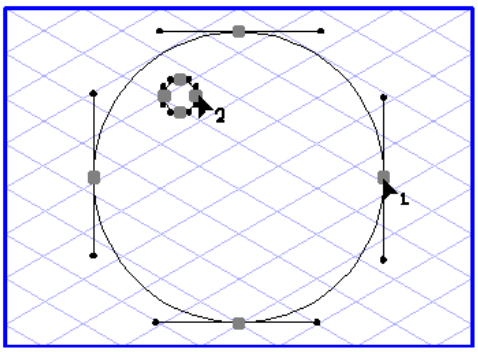

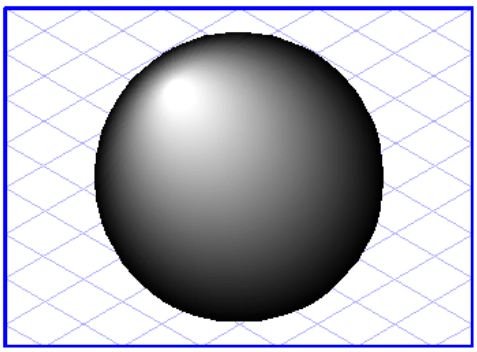

14
Projection

The **Projection** tools will help you project elements into another perspective plane or onto solids.

Note

Image elements and placed files containing image elements cannot be transformed using this function.

Plane Projection

The **Plane projection** tool allows you to drag selected elements onto another perspective plane.

This function allows you to use existing parts in another perspective. This can be useful, for example, if you want to change a technical view into a perspective view. Furthermore, you can project elements from one perspective into another.

Perspective Planes

A perspective plane is an area of any orientation which is located in free space. It is obtained when, for example, you move a rectangle into a perspective orientation using transformations such as moving, rotation, reflection and distortion.

Unlike 3D programs, Arbortext IsoDraw does not require you to perform calculations and the like in order to locate a plane. In
Arbortext IsoDraw CADprocess you define a plane with the ellipse. Every ellipse can define the plane it is located in by means of the ellipse value and orientation angle.

Note

A thread also contains all the information relating to the plane it is located in. The term ellipse will be used in the following sections, even if the statements are also valid for threads.

When using the **Plane projection** tool, it is important you are able to see the planes you are working with. The left-hand illustration shows you a plane in a flat view which is to be projected into a perspective plane. The right-hand illustration shows two planes between which elements can be projected.

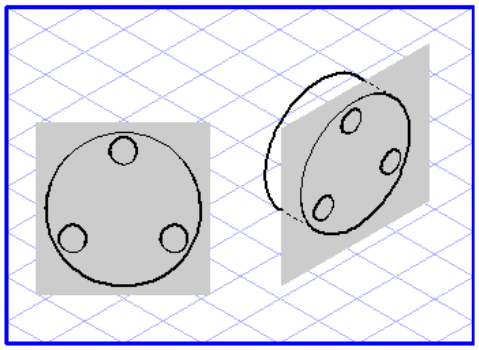

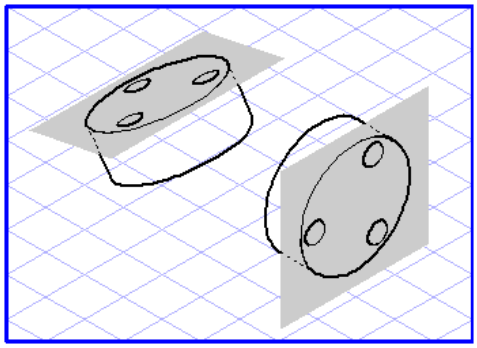

Starting and Target Planes

If you want to drag elements from one plane to another, Arbortext IsoDraw needs to know the planes involved. The starting plane defines the plane the elements are located in, while the target plane defines the plane which the elements are to be projected into. Both planes are defined by ellipses:

The starting plane is defined by the ellipse you click with the cursor in order to drag all the selected elements into the new plane. If you click a different element instead, the starting plane will be assumed to be a flat view.

The target plane is defined by the ellipse you touch with the cursor while you are dragging the selected elements over the drawing. If you release the mouse button while this ellipse is selected, the elements will be dragged into this plane. If there is no ellipse due to the fact that you have released the mouse button over an empty part of the drawing, Arbortext IsoDraw assumes that you want to drag all the selected elements from a plane into a flat view.

Three different projections result:

- If only the target plane exists, the elements are dragged from a flat view into a plane.
- If only the starting plane exists, the elements are dragged from a plane into a flat view.
- If both the starting plane and target plane exist, the elements are dragged from one plane to a new one.

Note

If the ***Arrow cursor*** *tool is activated, you can switch to the* ***Plane projection*** *tool by pressing the CTRL key. You can release the CTRL key again as soon as you have started dragging.*

Projection from a View into a Plane

Select the elements you want to drag into the plane. Select the **Plane projection** tool. The pointer becomes a **move hand** .

Now click one of the selected elements and drag it over the drawing area. The **move hand** becomes a **fist** . Each ellipse you touch with the cursor during the dragging operation will be selected. If you release the mouse button while an ellipse is selected, all the dragged elements will be projected into this plane.

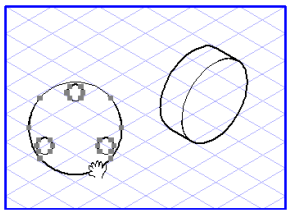
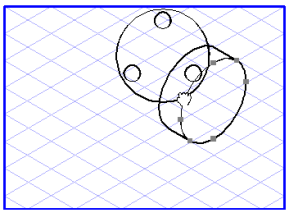
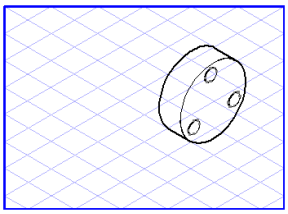

Projection from a Plane into a View

Select the elements you want to drag into a view. Select the **Plane projection** tool. The pointer becomes a **move hand** .

Now click one of the selected ellipses and drag it to an empty space on the drawing area. The **move hand** becomes a **fist** . As soon as you release the mouse button, the dragged elements will be projected out of their current plane into a flat view.

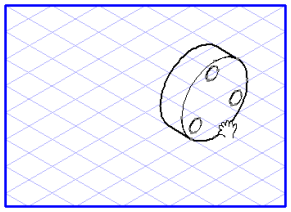
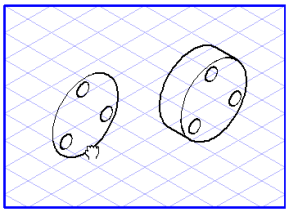
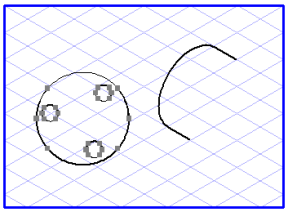

Projection from One Plane into Another

Select the elements you want to drag from one plane into another. Select the **Plane projection** tool. The pointer becomes a **move hand** .

Now click one of the selected ellipses and drag it over the drawing area. The **move hand** becomes a **fist** . Each ellipse you touch with the cursor during the dragging operation will be selected. If you release the mouse button while an ellipse is selected, all the dragged elements will be projected out of their current plane into the target plane.

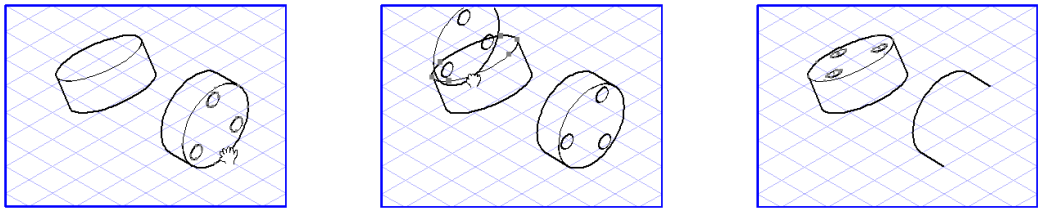

A Few Tips

The **Plane projection** tool can greatly simplify the task of working with perspectives. For example, it is often easier to perform changes in a flat view rather than in perspective. Do so by dragging the elements out of their perspective plane into a flat view. Augment or edit them here and then drag them back to the starting plane.

If you move elements back and forth between two planes, they may often not be positioned at the correct angle on the target plane. You should then use the **Perspective rotation** tool to move the elements to the required orientation.

If you hold down the ALT key while dragging the elements, the latter will be scaled so that the diameter of the starting ellipse corresponds to that of the target ellipse.

Projection Tools and Solids

Since Arbortext IsoDraw is not a 3D program when working in 2D mode, there are no real solids such as cylinders. These are not needed, however, in order to be able to use the tools. You simply require an ellipse to describe the cylinder. The same applies for the torus or the sphere. In all cases, a single ellipse is all you need to define the required solid.

In the case of a cylinder, the ellipse is viewed as if it were a straight section through the cylinder. Its diameter then corresponds to the diameter of the cylinder, while its ellipse value and orientation angle correspond to the cylinder's base ellipse.

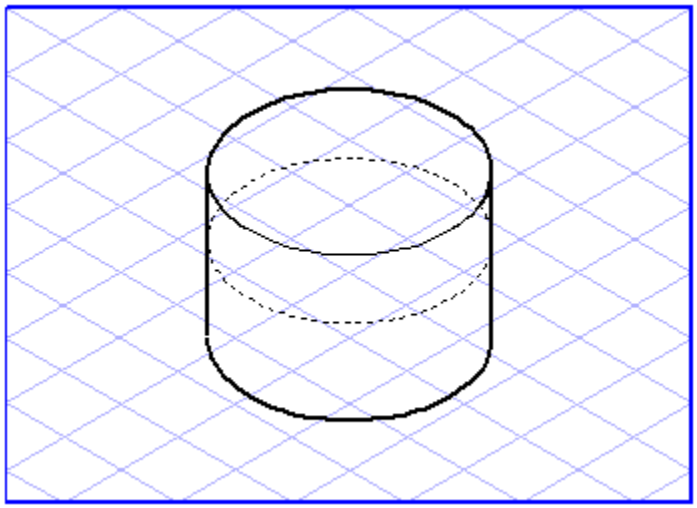

With a torus, the ellipse forms a ring around the torus. The ellipse diameter corresponds to the largest diameter of the torus.

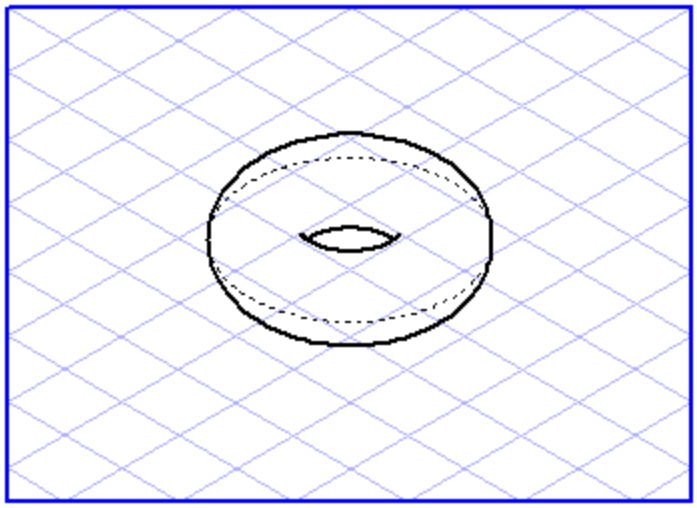

With a sphere, the ellipse is regarded as the . The diameter of the ellipse corresponds to that of the circle.

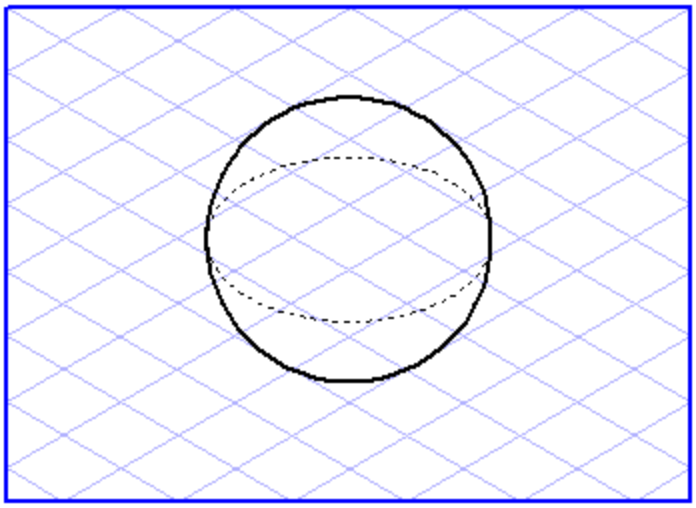

Wrapping Around a Cylinder

This tool lets you take elements located in a plane and wrap these around the surface of a cylinder. This is an easy way to depict labels on bottles, for example.

Select the elements you want to wrap around the cylinder. Select the **Wrapping around a cylinder** tool from the toolbox. The pointer becomes a **move hand** .

Now click one of the selected elements and drag it over the drawing area. The pointer becomes a **fist**. Each ellipse you touch with the cursor during the dragging operation will be selected. If you release the mouse button while an ellipse is selected, all the dragged elements will be wrapped around this .

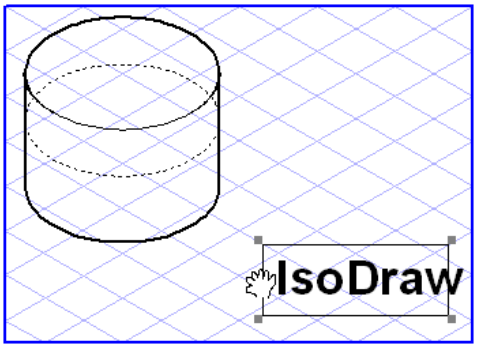

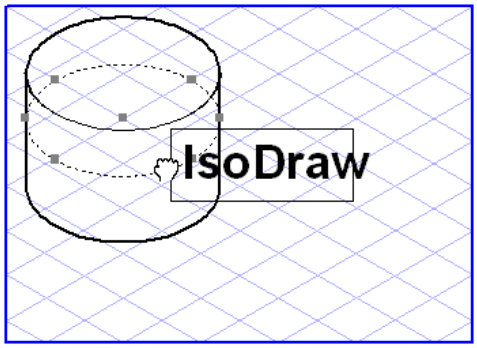

The elements have not yet been projected finally, you still have the opportunity to adapt the projection. Two arrows and a rectangle now appear on the illustration. You can use the arrows to rotate the elements in the ellipse plane. Do this by clicking one of the arrows and moving the mouse. You will see the elements being rotated.

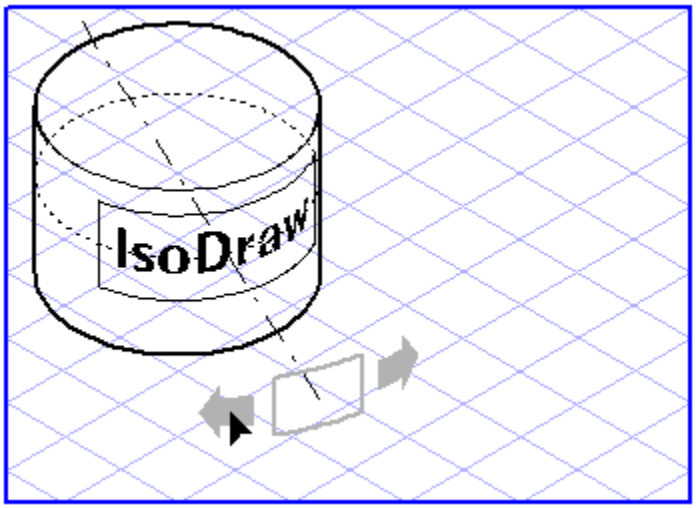

Once you have found a suitable position, move the mouse outside the range of the arrows. The pointer becomes a **camera** . Click an empty part of the drawing area. The following dialog box appears:

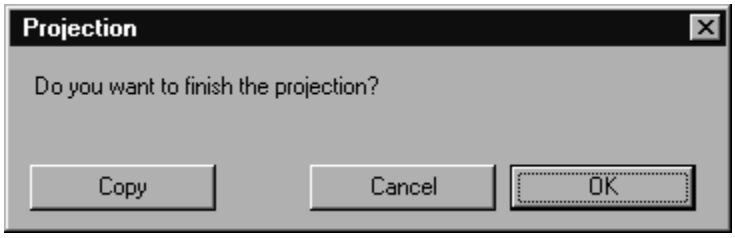

Clicking **Cancel** lets you quit this dialog box and continue editing the projection. Clicking **OK** terminates the projection process. The elements are then projected into their final positions. If you click **Copy** instead, however, all the elements will be copied and projected. The dialog box then closes and you can continue with another projection.

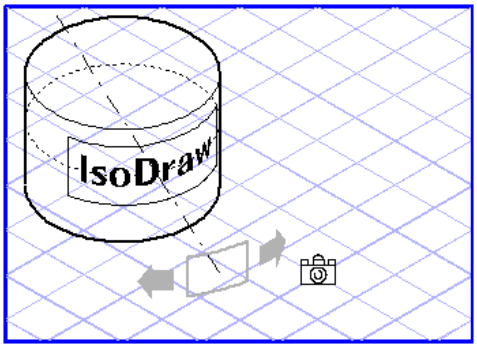

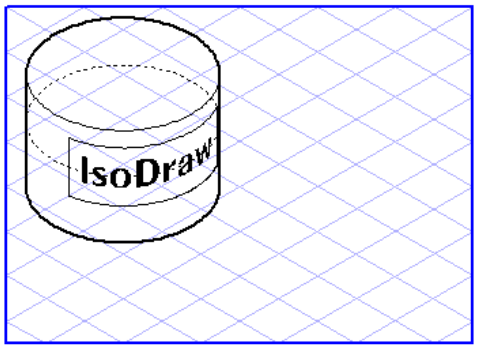

Entering Values

You can control the projection using either the mouse or keyed-in values. When you see the arrows, hold down the SHIFT key and click the drawing area. The following dialog box appears:

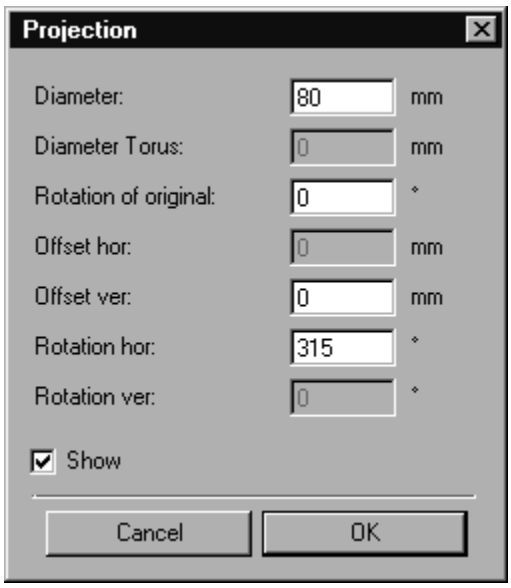

You can change various values in this window. If the **Show** box is checked, each change will be applied immediately so that you can check the effect of the change.

The diameter corresponds to the diameter of the ellipse which represents the cylinder. The rotation of the original ensures that all elements are rotated before being projected. If you enter a vertical offset (**Offset ver**), the elements are moved either upwards or downwards. The horizontal rotation (**Rotation hor**) specifies the number of degrees by which the elements have been rotated in the ellipse plane.

Clicking **OK** applies the new values. Click **Cancel** if you wish to use the settings which were in use before the dialog box was opened.

In the example below, the following values have been entered:

Diameter:	100 mm
Rotation of original:	45°
Offset ver:	50 mm
Rotation hor:	300°

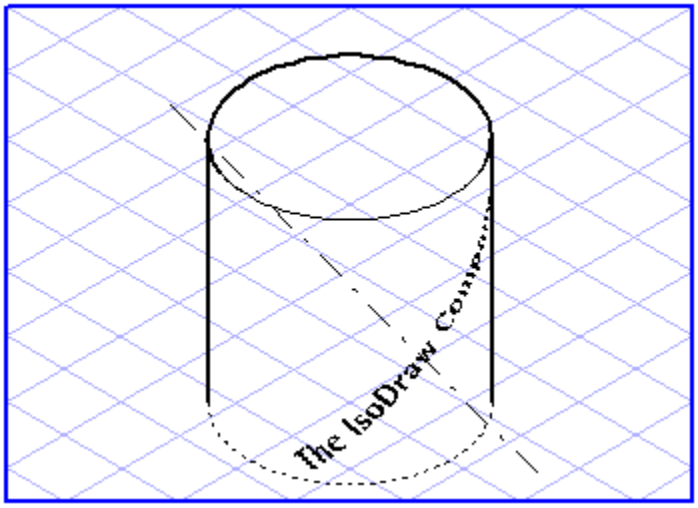

Wrapping Around a Sphere

This tool lets you take elements located in a plane and wrap these around the surface of a sphere. This is an easy way to depict a number on a billiard ball, for example.

Select the elements you want to wrap around the sphere. Select the **Wrapping around a sphere** tool from the toolbox. The pointer becomes a **move hand** .

Now click one of the selected elements and drag it over the drawing area. The **move hand** becomes a **fist** . Each ellipse you touch with the cursor during the dragging operation will be selected. If you release the mouse button while an ellipse is selected, all the dragged elements will be wrapped around this sphere.

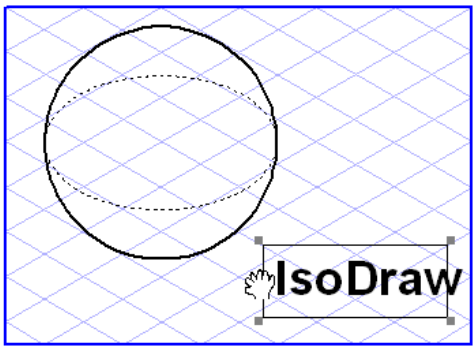

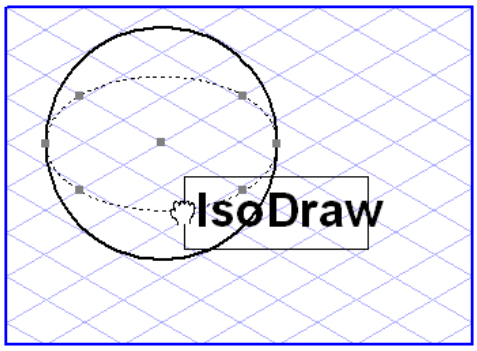

The elements have not yet been projected finally, you still have the opportunity to adapt the projection. Four arrows and two rectangles now appear on the illustration. You can use the arrows to rotate the elements in the ellipse plane or perpendicular to the ellipse plane. Do this by clicking one of the horizontal or vertical arrows and moving the mouse. You will see the elements being rotated. After clicking the small rectangle you can use the mouse to move the elements vertically over the surface of the sphere.

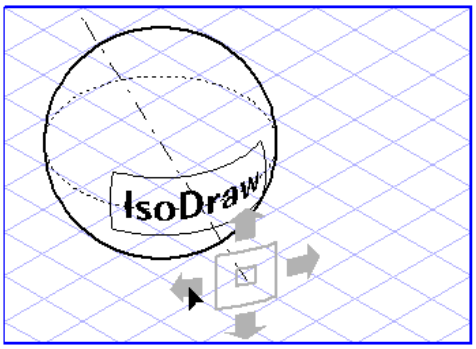

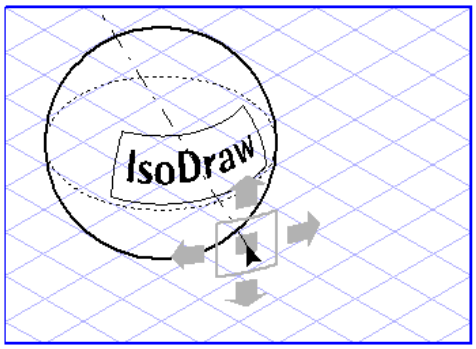

Once you have found a suitable position, move the mouse outside the range of the arrows or the small rectangle. The pointer becomes a **camera**  . Click an empty part of the drawing area. The following dialog box appears:

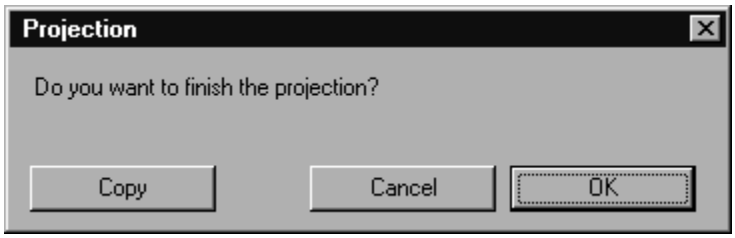

Clicking **Cancel** lets you quit this dialog box and continue editing the projection. Clicking **OK** terminates the projection process. The elements are then projected into their final positions. If you click **Copy** instead, however, all the elements will be copied and projected. The dialog box then closes and you can continue with another projection.

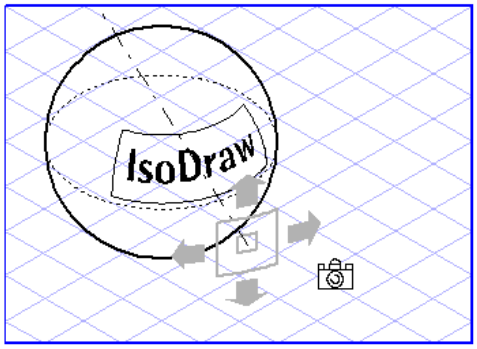

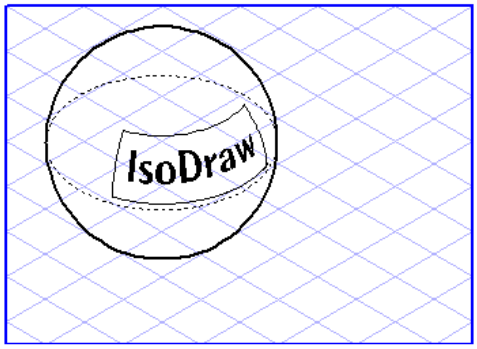

Entering Values

You can control the projection using either the mouse or keyed-in values. When you see the arrows, hold down the SHIFT key and click the drawing area. The following dialog box appears:

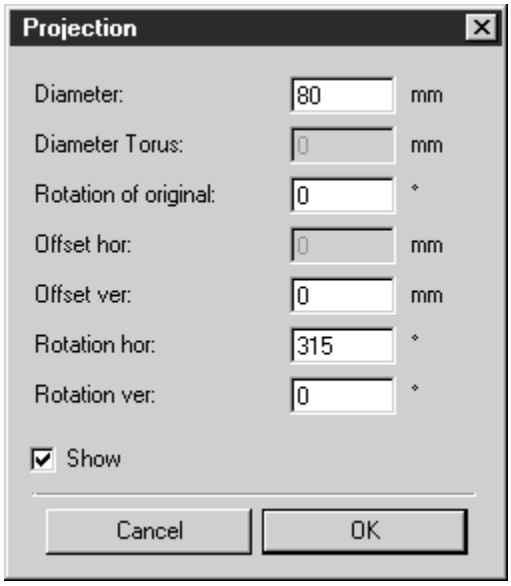

You can change various values in this window. If the **Show** box is checked, each change will be applied immediately so that you can check the effect of the change.

The diameter corresponds to the diameter of the ellipse which represents the sphere. The rotation of the original ensures that all elements are rotated before being projected. If you enter a vertical offset (**Offset ver**), the elements are moved either upwards or downwards on the surface of the sphere. The horizontal rotation (**Rotation hor**) specifies the number of degrees by which the elements have been rotated in the ellipse plane. Vertical rotation (**Rotation ver**) specifies the number of degrees by which the elements have been rotated perpendicular to the ellipse plane.

Clicking **OK** applies the new values. Click **Cancel** if you wish to use the settings which were in use before the dialog box was opened.

In the example below, the following values have been entered:

Diameter:	100 mm
Rotation of original:	30 °
Offset ver:	10 mm
Rotation hor:	300 °
Rotation ver:	10°

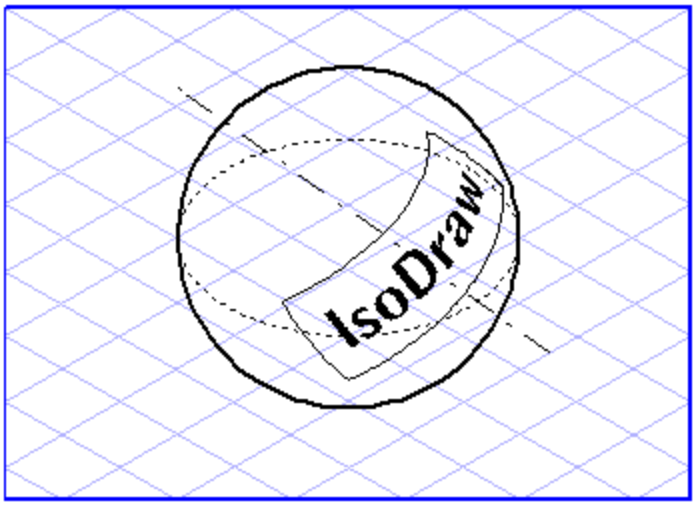

Wrapping Around a Torus

This tool lets you take elements located in a plane and wrap these around the surface of a torus. This is an easy way to depict writing on a tire, for example.

Select the elements you want to wrap around the torus. Select the **Wrapping around a torus** tool from the toolbox. The pointer becomes a **move hand**.

Now click one of the selected elements and drag it over the drawing area. The **move hand** becomes a **fist**. Each ellipse you touch with the cursor during the dragging operation will be selected. If you release the mouse button while an ellipse is selected, all the dragged elements will be wrapped around this .

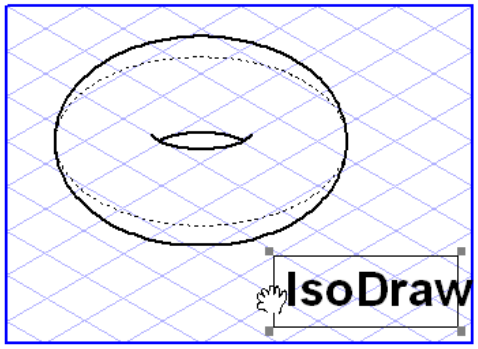

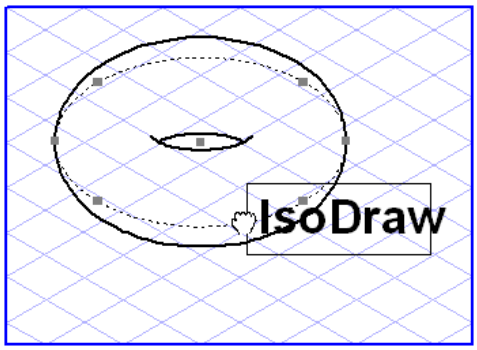

The elements have not yet been projected finally, you still have the opportunity to adapt the projection. Two arrows and two rectangles now appear on the illustration. You can use the arrows to rotate the elements in the ellipse plane. Do this by

clicking one of the arrows and moving the mouse. You will see the elements being rotated. After clicking the small rectangle you can use the mouse to move the elements vertically over the surface of the torus.

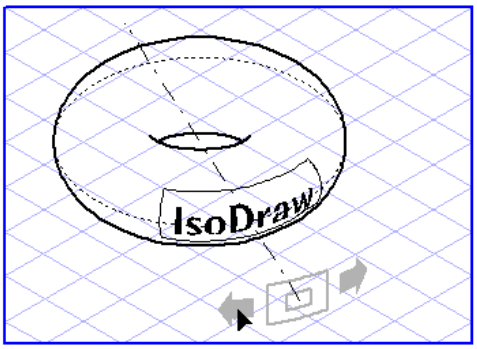

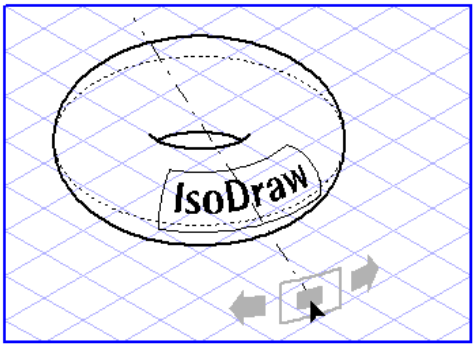

Once you have found a suitable position, move the mouse outside the range of the arrows or the small rectangle. The pointer becomes a **camera**  . Click an empty part of the drawing area. The following dialog box appears:

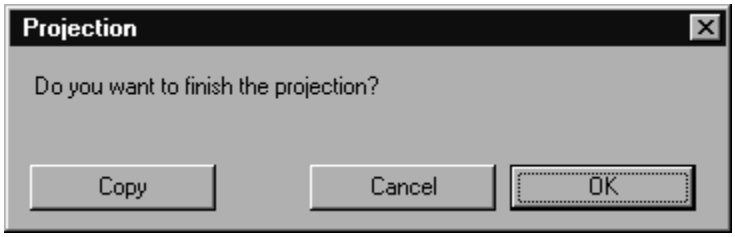

Clicking **Cancel** lets you quit this dialog box and continue editing the projection. Clicking **OK** terminates the projection process. The elements are then projected into their final positions. If you click **Copy** instead, however, all the elements will be copied and projected. The dialog box then closes and you can continue with another projection.

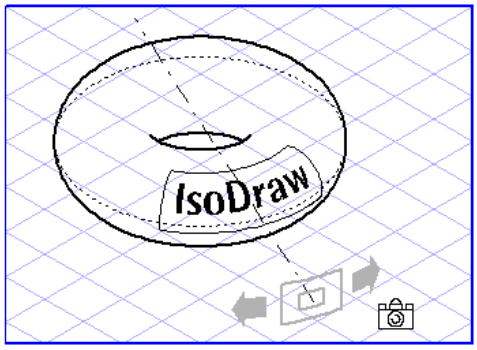

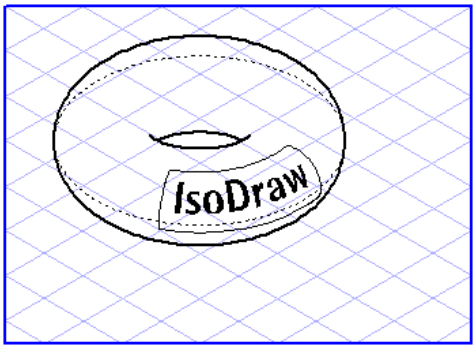

Entering Values

You can control the projection using either the mouse or keyed-in values. When you see the arrows, hold down the SHIFT key and click the drawing area. The following dialog box appears:

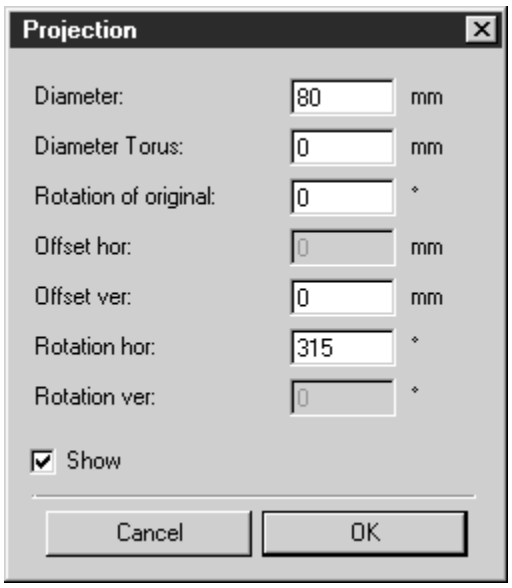

You can change various values in this window. If the **Show** box is checked, each change will be applied immediately so that you can check the effect of the change.

The diameter corresponds to the diameter of the ellipse which represents the torus. The rotation of the original ensures that all elements are rotated before being projected. If you enter a vertical offset (**Offset ver**), the elements are moved either upwards or downwards on the surface of the torus. The horizontal rotation (**Rotation hor**) specifies the number of degrees by which the elements have been rotated in the ellipse plane.

Clicking **OK** applies the new values. Click if you wish to use the settings which were in use before the dialog box was opened.

In the example below, the following values have been entered:

Diameter:	100 mm
Diameter Torus:	34 mm
Rotation of original:	20°
Offset ver:	10 mm
Rotation hor:	260°

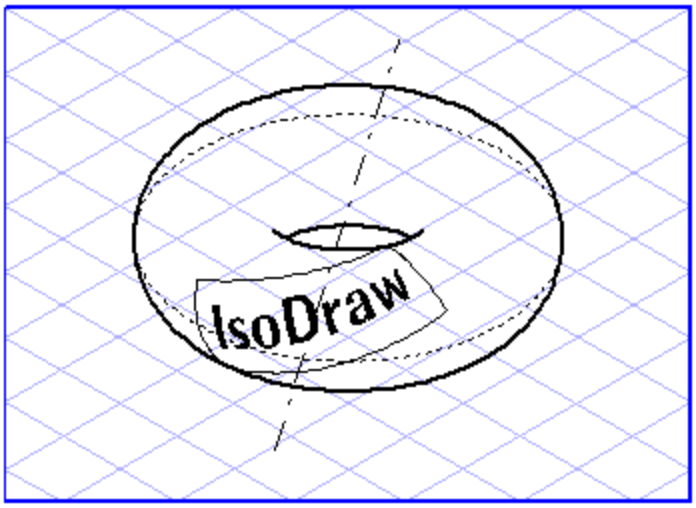

Penetrating a Cylinder

This tool lets you create penetration curves on a cylinder. All elements plane may be used for the cylinder's penetration. This is an easy way to depict branch T's, for example.

Select the elements which are to penetrate the cylinder. Select the **Penetrating a cylinder** tool from the toolbox. The pointer becomes a **move hand**.

Now click one of the selected elements and drag it over the drawing area. The **move hand** becomes a **fist**. Each ellipse you touch with the cursor during the dragging operation will be selected. If you release the mouse button while an ellipse is selected, all the dragged elements will be imaged onto this cylinder to represent the edges of the penetration curves.

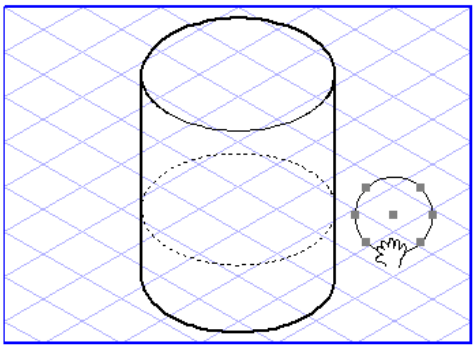

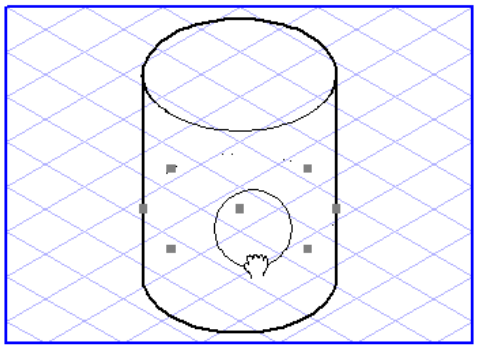

The elements’ penetration curves have not yet been defined finally, you still have the opportunity to change the position of the elements. Four arrows and two rectangles now appear on the illustration. The horizontal arrows let you change the elements' positions in the ellipse plane. Do this by clicking one of the arrows and moving the mouse. You will now see the penetration curves on the cylinder being rotated.

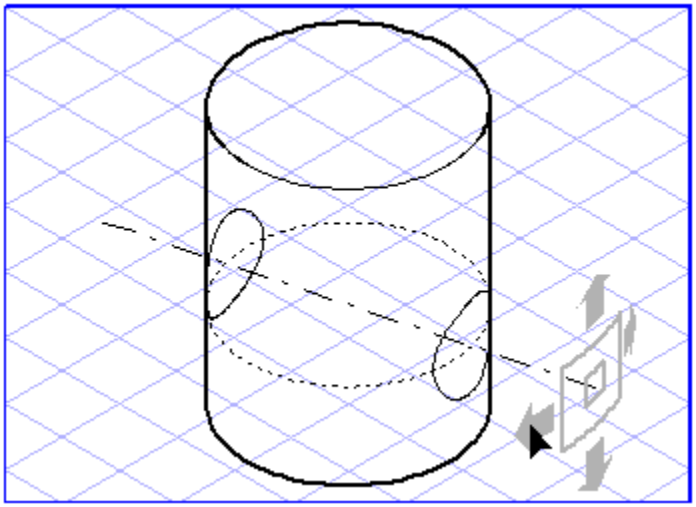

The vertical arrows allow you to change the penetration direction relative to the cylinder. Do this by clicking one of the arrows and moving the mouse. You will see how the central axis of the elements is rotated and the penetration curves move up or down.

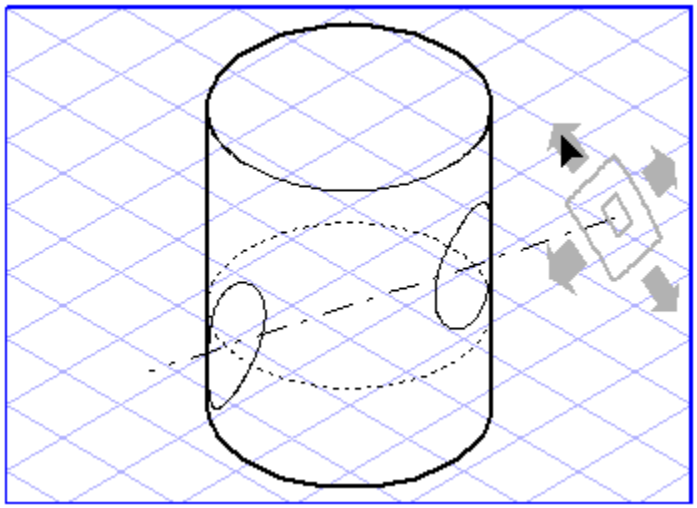

It is still possible to change the horizontal position. Do this by clicking the small rectangle and moving the mouse. You will see how the central axis of the elements with the penetration curves is moved outwards away from the center of the cylinder.

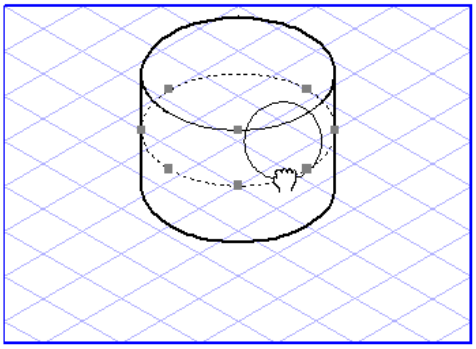

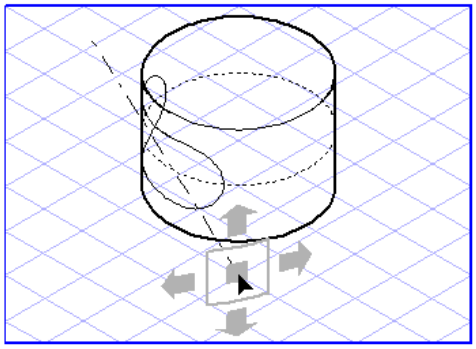

Once you have found a suitable position, move the mouse outside the range of the arrows or the small rectangle.

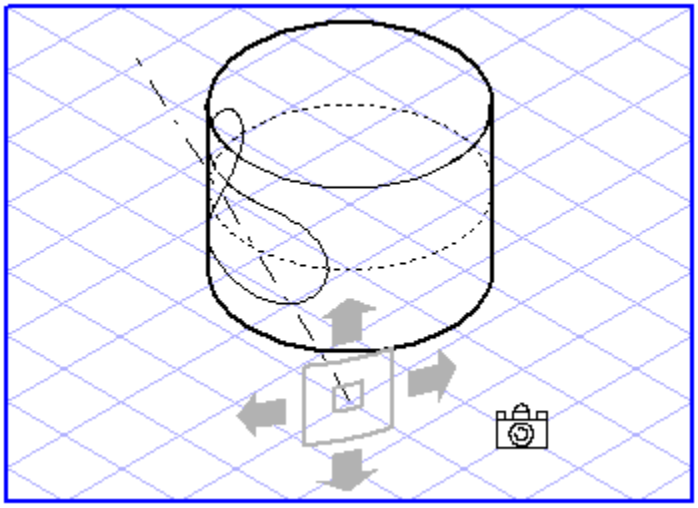

The pointer becomes a **camera**  . Click an empty part of the drawing area. The following dialog box appears:

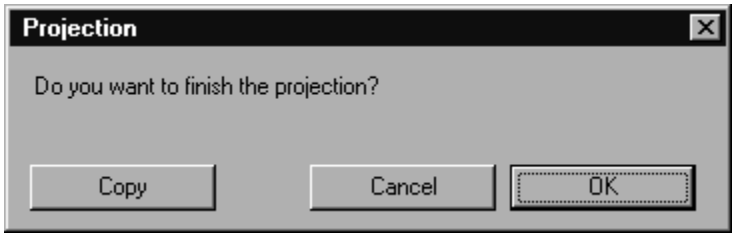

Clicking **Cancel** lets you quit this dialog box and continue editing the penetration. Clicking **OK** terminates penetration generation. The final penetration curves are then created. If you click **Copy** instead, however, all the elements will be copied and the penetration curves created.

The dialog box then closes and you can set about generating another penetration.

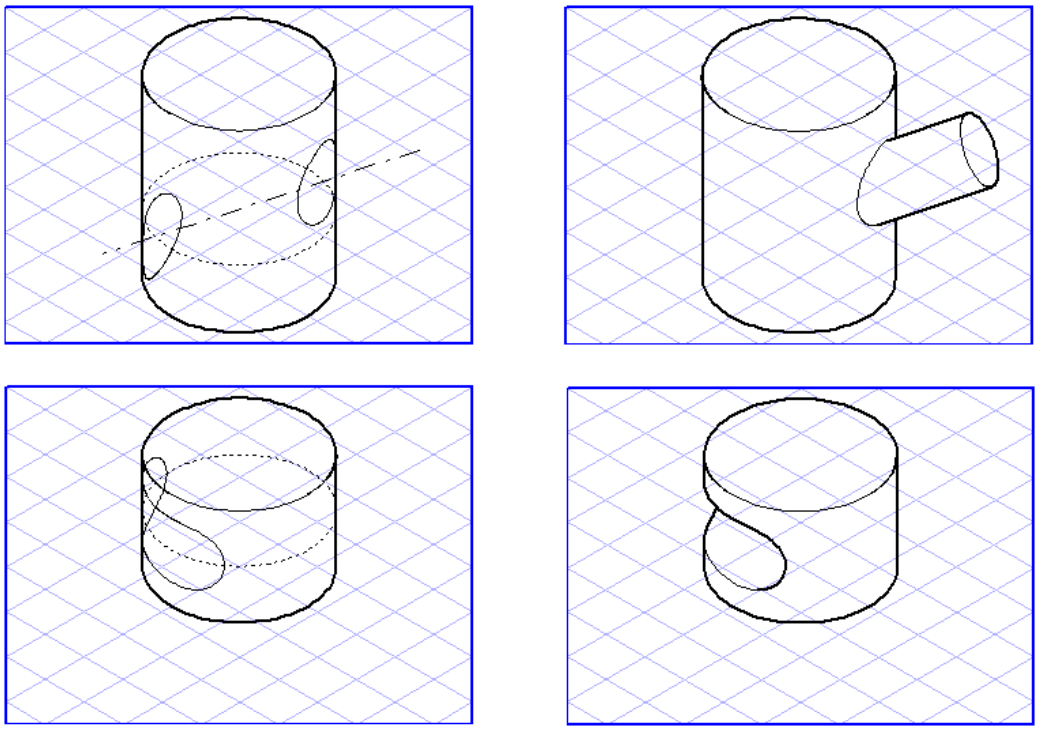

Entering Values

You can control the penetration using either the mouse or keyed-in values. When you see the arrows, hold down the SHIFT key and click the drawing area. The following dialog box appears:

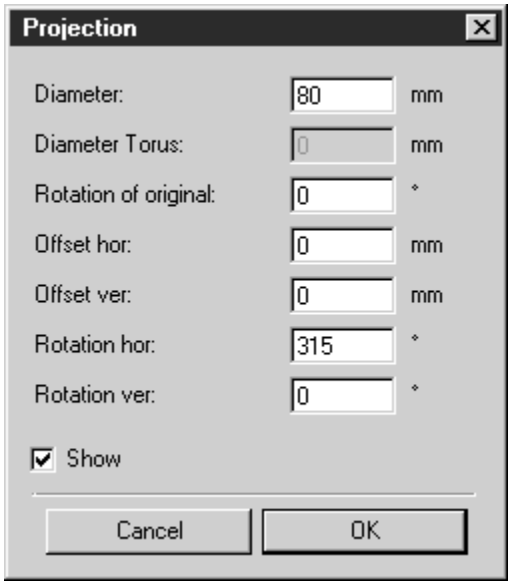

You can change various values in this window. If the **Show** box is checked, each change will be applied immediately so that you can check the effect of the change.

The diameter corresponds to the diameter of the ellipse which represents the cylinder. The rotation of the original results in all the elements firstly being rotated. If you enter a horizontal offset (**Offset hor**), the elements are moved horizontally in the ellipse plane. If you enter a vertical offset (**Offset ver**), the elements are moved either upwards or downwards. The horizontal rotation (**Rotation hor**) specifies the number of degrees by which the elements have been rotated in the ellipse plane. Vertical rotation (**Rotation ver**) specifies the number of degrees by which the penetration axis has been rotated out of the ellipse plane.

Clicking **OK** applies the new values. Click **Cancel** if you wish to use the settings which were in use before the dialog box was opened.

In the example below, the following values have been entered:

Diameter:	100 mm
Rotation of original:	0 °
Offset hor:	-10 mm
Offset ver:	0 mm
Rotation hor:	300°
Rotation ver:	30°

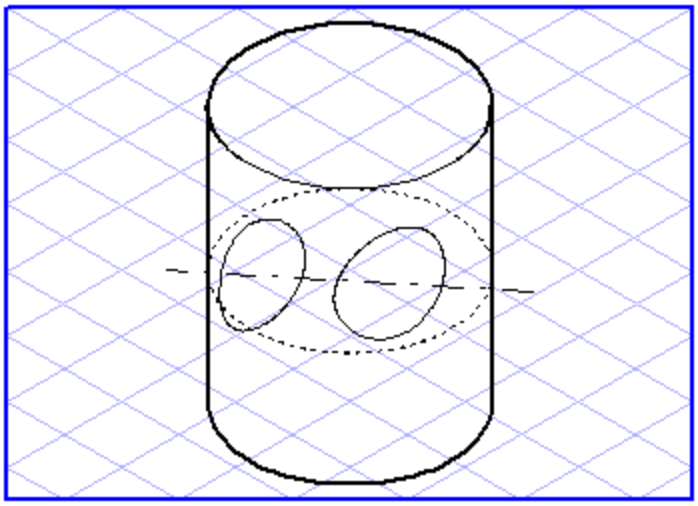

Penetrating a Sphere

This tool lets you create penetration curves on a sphere. All elements lying in one plane may be used for the penetration of the sphere. This is an easy way to depict composite parts with a spherical structure (e.g. knob with bar).

Select the elements which are to penetrate the sphere. Select the **Penetrating a sphere** tool from the toolbox. The pointer becomes a **move hand**.

Now click one of the selected elements and drag it over the drawing area. The **move hand** becomes a **fist**. Each ellipse you touch with the cursor during the dragging operation will be selected. If you release the mouse button while an ellipse is selected, all the dragged elements will be imaged onto this sphere to represent the edges of the penetration curves.

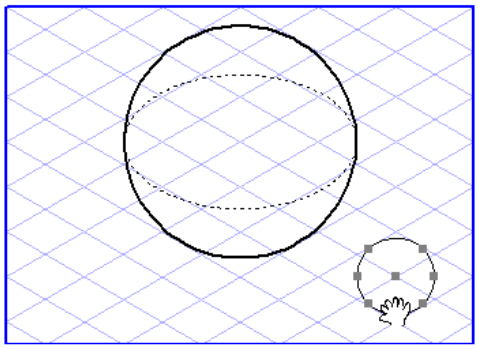

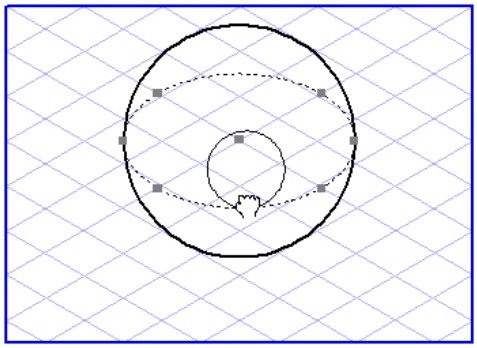

The elements' penetration curves have not yet been defined finally, you still have the opportunity to change the position of the elements. Four arrows and two rectangles now appear on the illustration. The horizontal arrows let you change the elements' positions in the ellipse plane. Do this by clicking one of the arrows and moving the mouse. You will now see the penetration curves on the sphere being rotated.

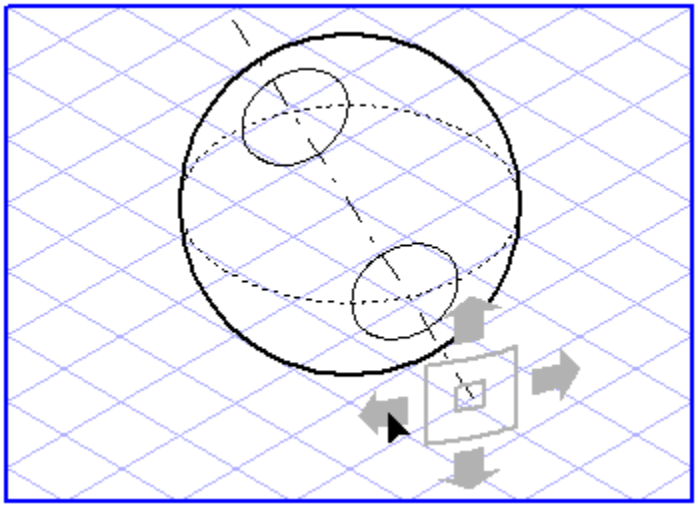

The vertical arrows allow you to change the angle of the penetration curves on the sphere. Do this by clicking one of the arrows and moving the mouse. You will see how the central axis of the elements is rotated and the penetration curves move up or down.

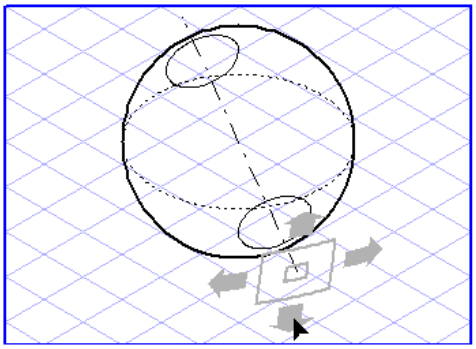

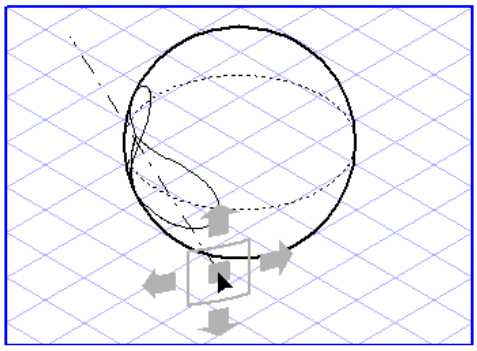

It is still possible to change the horizontal and vertical position. Do this by clicking the small rectangle and moving the mouse. You will see how the central axis of the elements with the penetration curves is moved outwards away from the center of the sphere.

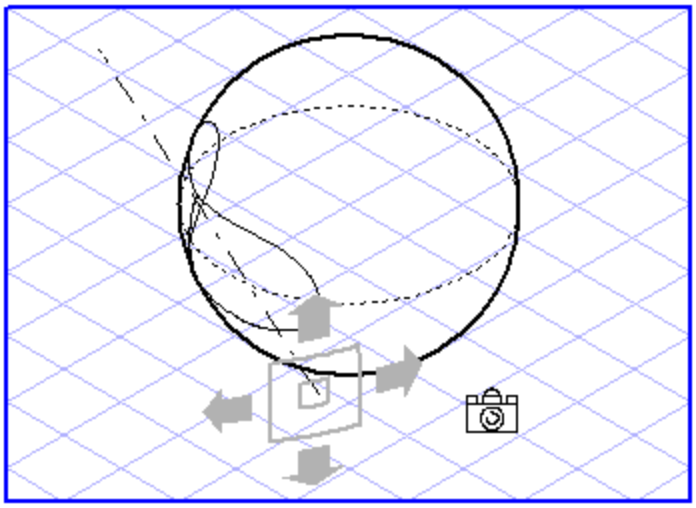

Once you have found a suitable position, move the mouse outside the range of the arrows or the small rectangle.

The pointer becomes a **camera**  . Click an empty part of the drawing area. The following dialog box appears:

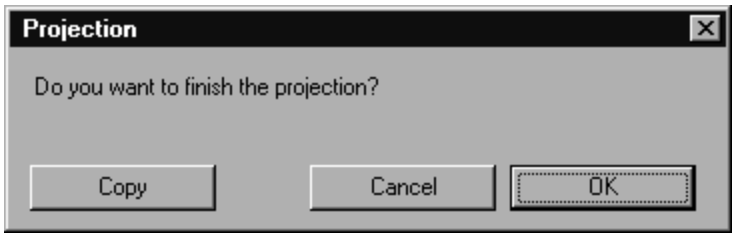

Clicking **Cancel** lets you quit this dialog box and continue editing the penetration. Clicking **OK** terminates penetration generation. The final penetration curves are then created. If you click **Copy** instead, however, all the elements will be copied and the penetration curves created.

The dialog box then closes and you can set about generating another penetration.

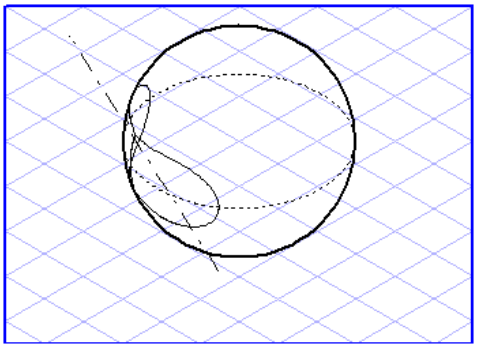

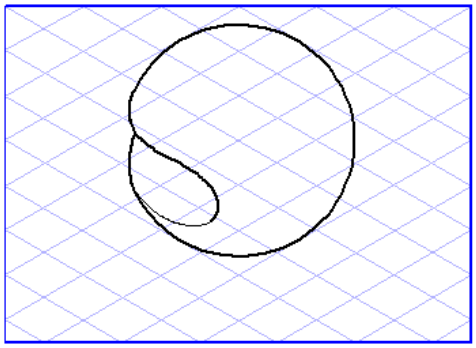

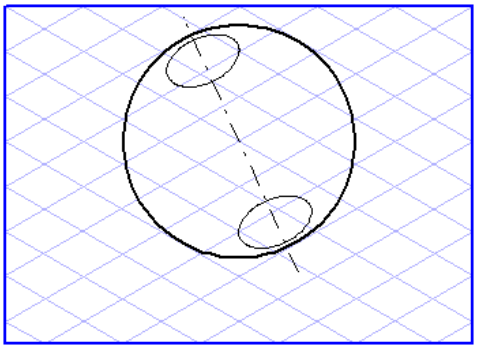

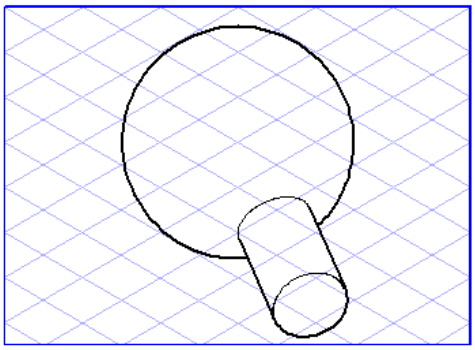

Entering Values

You can control the penetration using either the mouse or keyed-in values. When you see the arrows, hold down the SHIFT key and click the drawing area. The following dialog box appears:

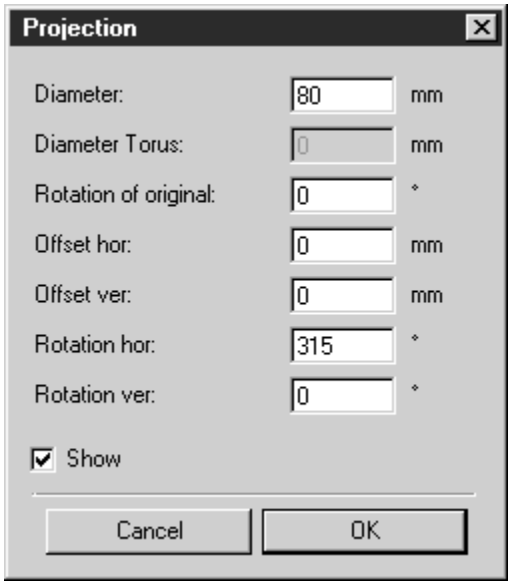

You can change various values in this window. If the **Show** box is checked, each change will be applied immediately so that you can check the effect of the change.

The diameter corresponds to the diameter of the ellipse which represents the sphere. The rotation of the original results in all the elements firstly being rotated. If you enter a horizontal offset (**Offset hor**), the elements are moved horizontally in the ellipse plane. If you enter a vertical offset (**Offset ver**), the elements are moved either upwards or downwards. The horizontal rotation (**Rotation hor**) specifies the number of degrees by which the elements have been rotated in the ellipse plane. Vertical rotation (**Rotation ver**) specifies the number of degrees by which the penetration axis has been rotated out of the ellipse plane.

Clicking **OK** applies the new values. Click **Cancel** if you wish to use the settings which were in use before the dialog box was opened.

In the example below, the following values have been entered:

Diameter:	100 mm
Rotation of original:	0 °
Offset hor:	-25 mm
Offset ver:	20 mm
Rotation hor:	300°
Rotation ver:	315°

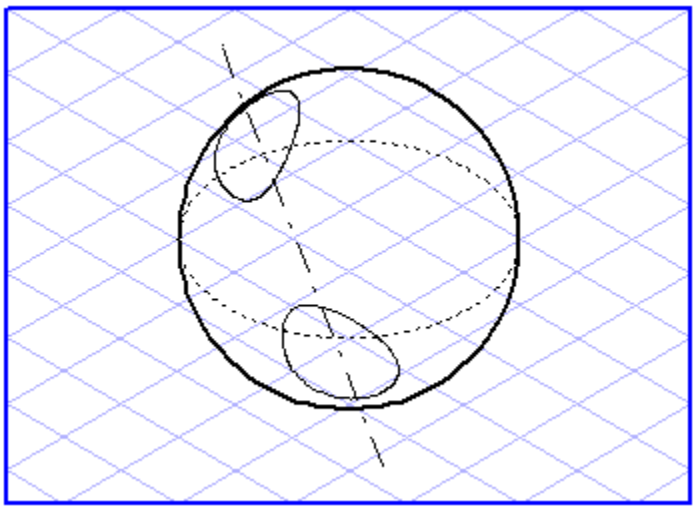

15

Rotational Surfaces

Using the **Rotational surfaces** function, you can easily generate a body in any perspective from the cross-sectional view of a rotational surface.

About Rotational Surfaces

A body has rotational symmetry if circles are obtained at any conceivable cross-section perpendicular to the axis of symmetry. An example of this is shown in the diagram on the left. If, as the diagram shows, the body has other attributes such as bores or cutouts at its circumference (see diagram), you should ignore these. As a basis, you will require a lengthways cross-section of the body (see middle picture). The outline of half the lengthways section is sufficient to allow you to work with the **Rotational surfaces** function. You can draw this cross-sectional view in Arbortext IsoDraw or adopt it from CAD data, for example. Apart from the outline lines, no other elements should be displayed. If the body has a bore in the axis of symmetry (as shown in the diagram on the left), draw an auxiliary line at the radial distance of the bore as the theoretical center line. The finished template for the displayed body is shown in the diagram on the right.

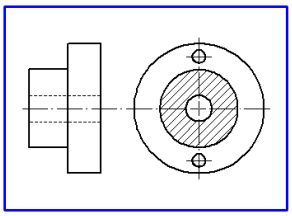

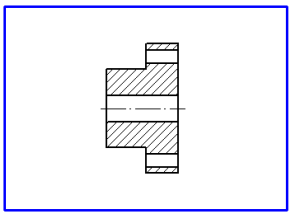

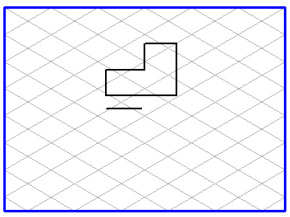

Generation

You have drawn the template as described on the previous page.

Now draw an ellipse. The orientation and ellipse value of this basic ellipse should be selected so that they agree with the desired perspective of the rotational body. This concludes the preparatory work.

Select all the elements in the cross-sectional drawing. Select the **Rotational surfaces** tool. The pointer becomes a **move hand**.

Now select any element from the list and drag this onto the ellipse. As soon as you touch the ellipse while dragging with the cursor, the ellipse is selected. If you release the mouse button while the ellipse is selected, the cross-section will be projected into the perspective as a body segment. The pointer becomes a **camera** .

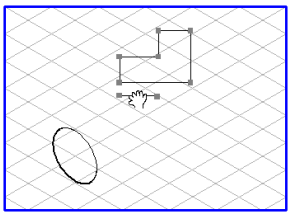
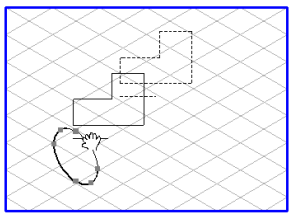
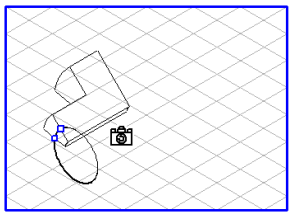

Two green points will appear on the ellipse which mark the start and end angles of the body segment. The orientations of the start and end angles are then aligned to the direction in which you have dragged the basic ellipse. If you move the cursor over a green point, it becomes an **arrow** cursor. Click the green point. When you drag the mouse, the green point moves over the ellipse and the associated elements are dragged around the ellipse. If you continue dragging until the two green points lie on top of each other, you will then see the full rotational body.

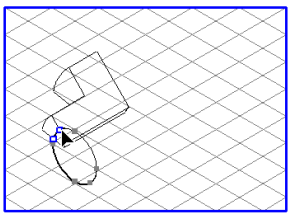
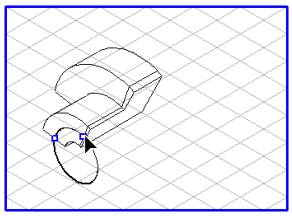
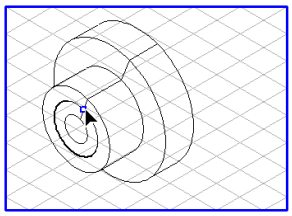

If you hold down the SHIFT key and click the free drawing area with your mouse, the following dialog box appears:

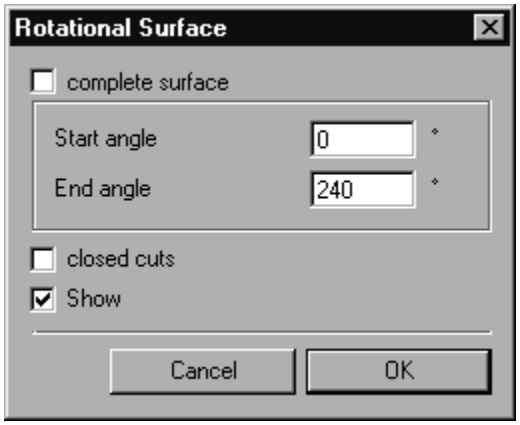

This window allows you to change various settings. If the **Show** box is checked, each change will be applied immediately so that you can check the effect of the change.

Checking the **complete surface** box causes the full rotational body to be displayed.

The changes made to the **Start angle** and **End angle** values determine the size of the body segment. The position of the segment depends on the value you have entered for the angle.

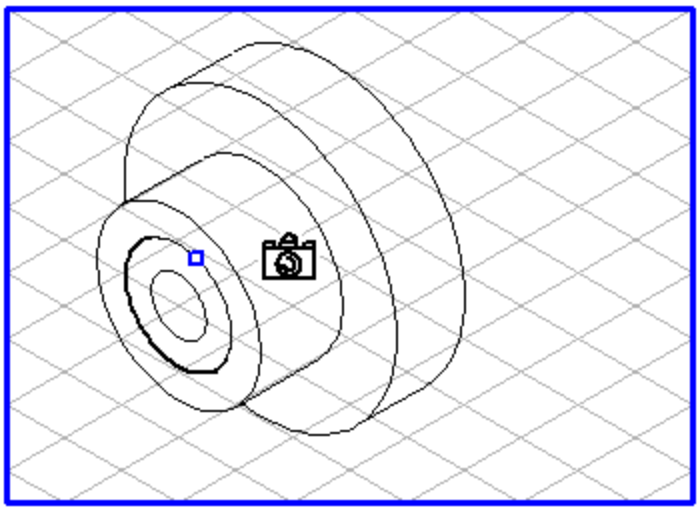

The body will initially be displayed hollow. If you check **closed cuts**, the cross-sectional areas of the body will be closed and the interlying lines will disappear.

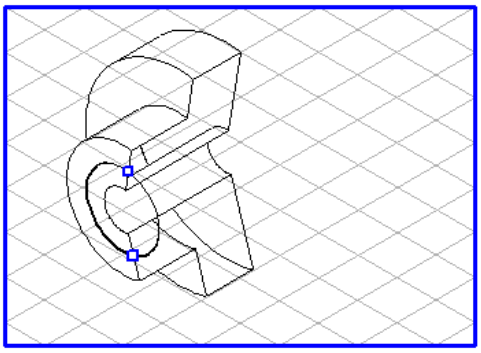

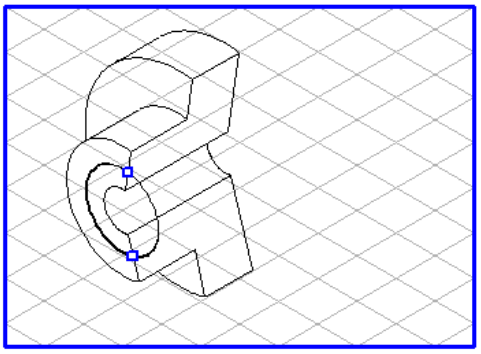

The entries will be applied if you click **OK**. Click **Cancel** if you wish to use the settings which were in use before the dialog box was opened.

Note

Using the green points or the dialog box, you can change the values as before.

Changing the Perspective

The basic ellipse gives you a number of other options for changing the perspective of a body.

Changing the Ellipse Value

To change the ellipse value, hold down the SHIFT key and click with the right-hand mouse button on the ellipse. The perspective of the rotational body will change to the new ellipse value for the basic ellipse.

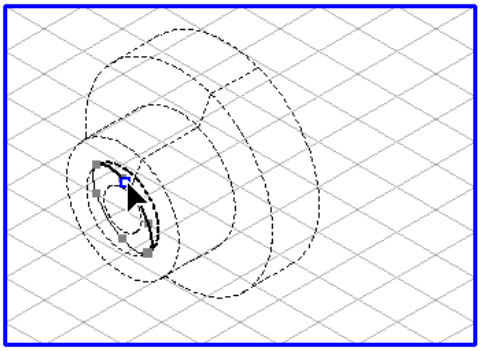

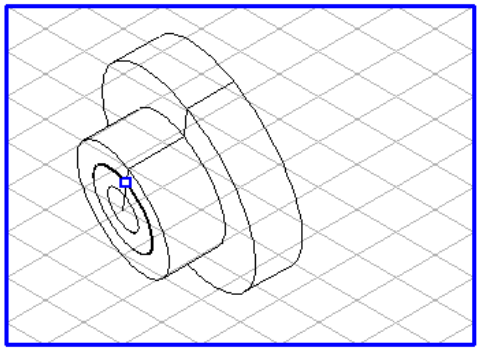

This function can be repeated as many times as you like.

Changing the Orientation of the Ellipse

Select the ellipse. If you hold the mouse over one of the element points on the ellipse, the pointer becomes an **arrow** cursor. Click the selection point and hold down the mouse button. If you move the mouse, the ellipse will rotate to a different orientation. If you release the mouse button, the body will appear in the corresponding perspective.

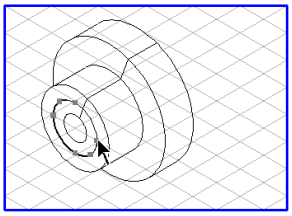

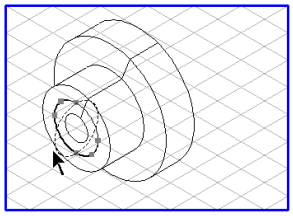

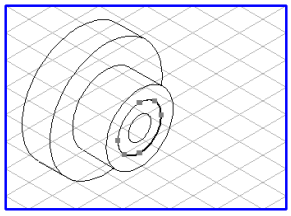

This function can be repeated as many times as you like.

Changing the Perspective in 3D Mode

As long as projection has not been concluded, it is possible to switch to 3D mode and use the tools and menu commands that are available in 3D mode. Descriptions of the 3D-mode functions can be found in 3D Transformation on page 193.

Choose the menu command **Element ▸ 3D transformation**. The rotational body appears in 3D mode on the three axes of the coordinate system.

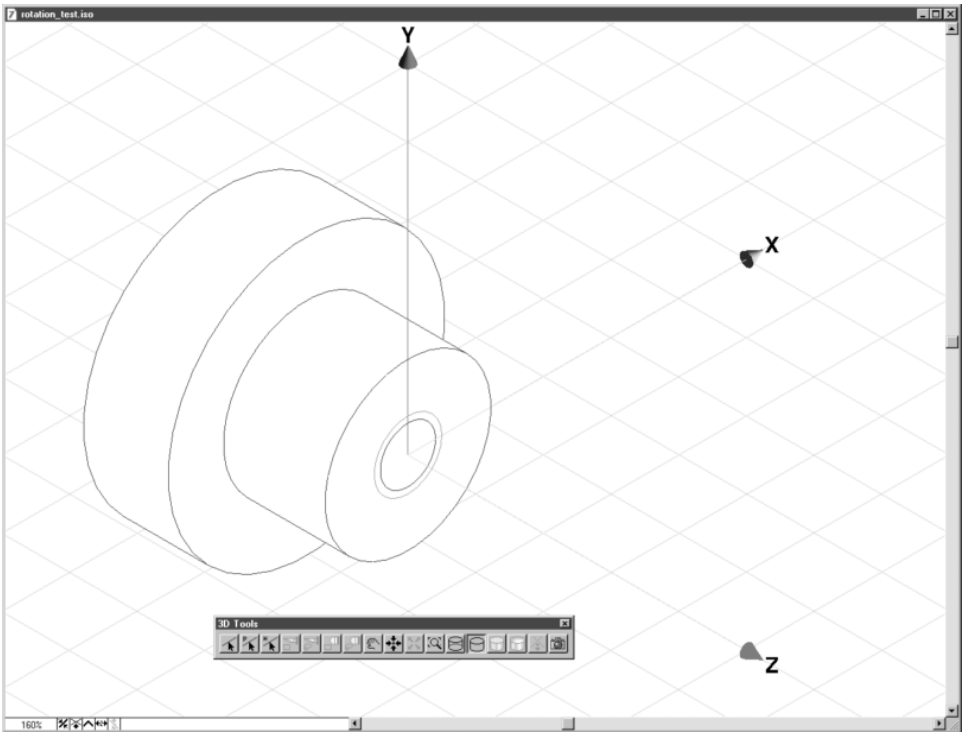

If you have completed the change and wish to go back to using the **Rotational surfaces** function, press the **Convert to 2D illustration** button.

Note

You can then continue to perform any changes and also return to 3D mode.

Quitting the Projection

Click an empty part of the drawing area. The **Projection** dialog box appears:

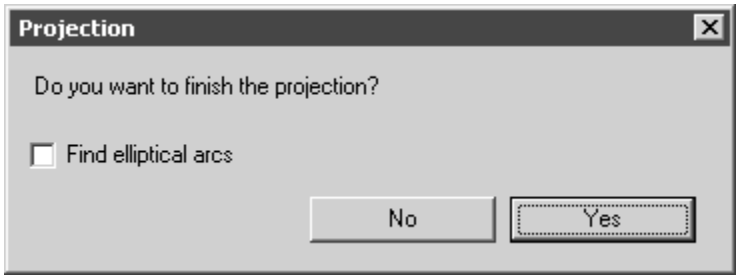

If you select **Find elliptical arcs**, all Bézier paths with an elliptical form appear as segments of an ellipse.

Note

If you want to add to a drawing of a rotational body, you should select the ***Find elliptical arcs*** *option. Working with elliptical elements is easier and more precise.*

Clicking **No** lets you quit this dialog box and continue editing the projection.

Clicking **Yes** terminates the projection process. The elements are then projected into their final positions. You can now delete the basic ellipse.

16
Transformations

Move

In principle, you can move all elements in Arbortext IsoDraw. In order to move an element, select it first with the **arrow** cursor. Then use the cursor to click anywhere on the contour of the element (outside the selection points on the contour) or on its center point and drag it to the required position. The same procedure applies if you have selected several elements and/or groups.

If you begin to move elements immediately after depressing the mouse button, the only element displayed on the screen will be the one you have clicked. This is designed to save time during the screen redrawing process. If, however, you want to see more accurately what you are moving, wait a short while after depressing the mouse button. The pointer becomes a **move** cursor. If you now move the mouse, you will see all the elements on the screen you want to move.

When moving with the mouse, the elements are attracted by neighboring element points or the grid snap points, depending on the current setting. This may affect the direction you want to move the elements in. You can reverse the current setting of the grid snap function temporarily by holding down the CTRL key while you move the element.

Note

The various features encountered when moving the different elements are described in the sections relating to the particular element types.

You also have a second option when moving ellipses and threads. You will often find that you need to move a ellipse along its own minor axis or the diameter. By holding down both the SHIFT key and ALT key while moving the ellipse, you will

only be able to move the ellipse in these directions. You can also use this option if you want to drag the ellipse with the double arrow while holding down the CAPS LOCK key.

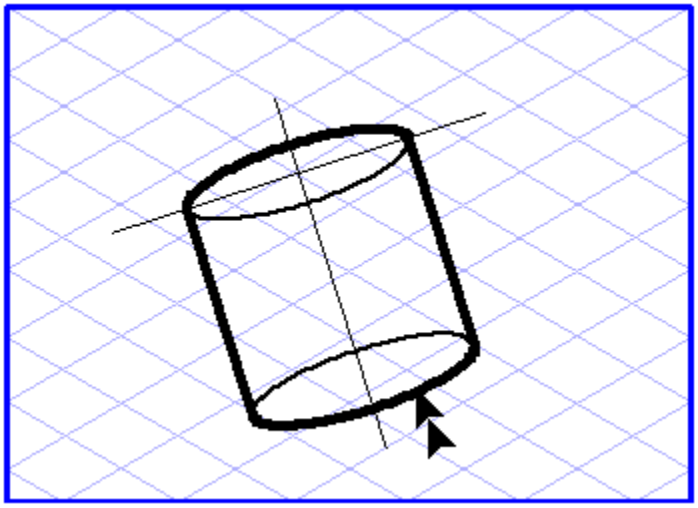

Moving with Connecting Lines

When the CAPS LOCK key is held down, the **arrow** cursor becomes a **double arrow** cursor. If you now click on one or more selected elements, you can drag the selected elements to form a perspective representation. Those elements you originally selected remain in their places and you merely move a copy of them. During this process, a line is drawn from each element point of the elements you originally selected to the corresponding element point in the copy.

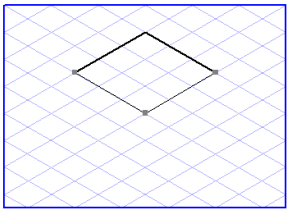

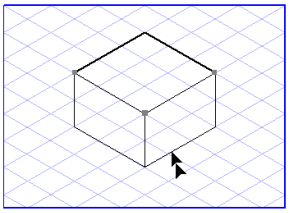

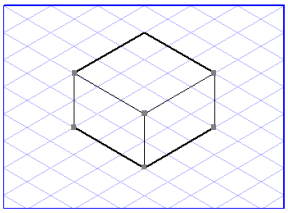

Note

It is not possible to drag threads and markers using this method.

Moving via Dialog Box

The **Move** dialog box provides you with an alternative way of moving objects. This dialog box appears when you choose **Edit** ▸ **Move**.

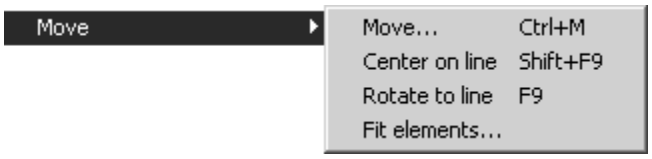

This dialog box offers you several options for entering exact values when moving elements. You can enter absolute dimensions in the **horizontal** and **vertical** fields, for example. This moves the selected elements by exactly the values you have specified. Alternatively, you can also enter an angle and a distance in the respective fields. This specifies how far and in which direction the selected object is to be moved.

The arrow graphic shows you the direction the elements are moved in. Clicking the arrow allows you to specify the angle with the mouse. This causes the arrow to snap to the major axes. In the same way as when you drag a line, you can also deactivate the grid alignment function by holding down the ALT key.

You can use the three buttons **X axis**, **Y axis** and **Z axis** to turn the arrow in the direction of the major axes.

If you move elements along the major axes, it is possible to have the dimensions shortened by the correct amount using perspective foreshortening. To do this, select the corresponding check box. The entries in the other fields will change immediately.

For example, in order to move elements 50 mm along the X axis, you should proceed as follows. Click the **X axis** button or turn the arrow so that it points in the direction of the X axis. Now enter a **distance** of `50 mm`. The values in the **horizontal** and **vertical** fields are calculated so that they match.

Now select the **With foreshortening** check box. The values in the **horizontal** and **vertical** fields are calculated so that they match. This setting can be used to move the elements in perspective as required by the current grid.

Under **Options** you can select **Elements** and **Patterns**. If the **Elements** box is checked, only the elements selected are moved. If the **Patterns** box is also checked, existing patterns will also be moved. If you want to move patterns with reference to elements, check only the **Patterns** box.

Confirm your entries by clicking **OK**. Or exit the dialog box without moving the elements by clicking **Cancel**.

Instead of concluding your entry with **OK**, you can also initiate the **Move** command by clicking the **Copy** button. The selection will remain unchanged. Instead a copy of the selection will be generated which is moved on the basis of your instructions.

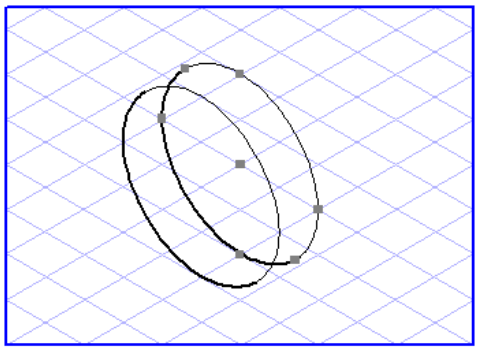

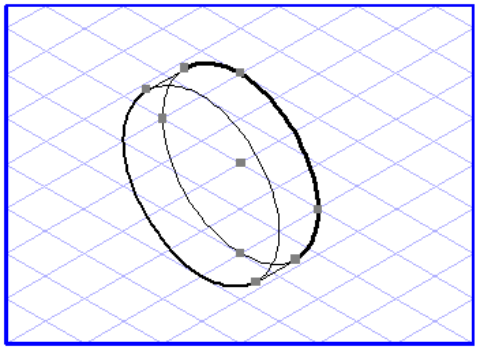

Selecting the **Connecting lines** check box also generates a copy of the selected object which is moved according to your specifications, irrespective of whether you click **OK** or **Copy**. In addition, connecting lines are drawn between the element points of the original elements and those of the newly generated elements.

This procedure corresponds to moving with connecting lines which has already been described earlier in this section.

Moving via Keyboard

A further option for moving objects involves using the keyboard. Select the objects to be moved, hold down the CTRL key, and press one of the keys on the numerical keypad. You can then move the selected object in 2 mm steps in the horizontal and vertical directions or the directions allowed by the respective grid (refer to diagram below).

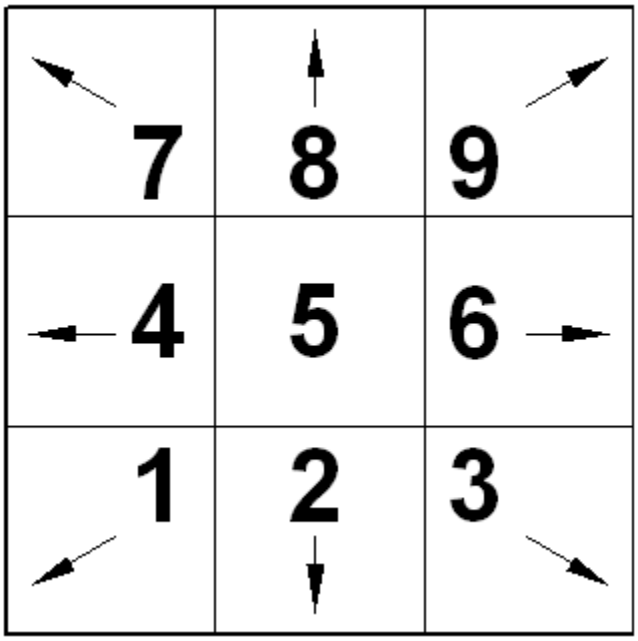

The step increment is automatically set to 5 mm when you start the program. You can change the default value of this distance by pressing the CTRL key and the 5 on the numerical keypad. The following dialog box will appear:

Enter the required value and confirm it with **OK**.

Moving in 3D Mode

Applies to Arbortext IsoDraw Foundation only.

You can use the arrow cursor to move the loaded 3D drawing. First select the direction you wish to move them in. You can either move them on the X-Z plane or along the Y-axis. Either click on the Y-axis or on the X or Z-axis for the plane. The free axis is highlighted. If you have selected the X-Z plane, you can move the drawing in the direction of either the X or Z axis. Holding down the ALT key allows you to move the selected assemblies freely.

Click the contour of the drawing with the arrow cursor. Hold down the mouse button and move the mouse. The drawing migrates on the axis as you move the mouse. The distance is displayed in the window bar at the bottom. The drawing will appear in its new position when you release the mouse button.

Moving in 3D Mode with Arbortext IsoDraw CADprocess

Applies to Arbortext IsoDraw CADprocess only.

All objects (assemblies) in the drawing can be moved with the **Arrow cursor** tool. First select the direction you wish to move them in. You can either move them on the X-Z plane or along the Y-axis. Either click on the Y-axis or on the X or Z-axis for the plane. The free axis is highlighted. If you have selected the X-Z plane, you can move all the assemblies in either X or Z-direction. Holding down the ALT key allows you to move the selected assemblies freely.

Note

*3D transformations, such as **3D Move**, only apply to visible 3D objects by default. If you want 3D transformations to apply to both visible 3D objects and invisible parts inside of 3D objects, you must enable the* `CADprocess_TransformInvisible3DSubObjects` *preference setting. See* *3D Editing Preferences on page 135* *for instructions.)*

If you have previously created a free axis with one of the **3D Select axis** tools, the blue free axis appears. Provided no other axis is selected, your selected assemblies or elements will be moved along this axis.

Use the selection rectangle to select all the assemblies in the drawing. Click the contour of an assembly. Hold down the mouse button and move the mouse. The drawing migrates on the axis as you move the mouse. The distance is displayed in the window bar at the bottom. The drawing will appear in its new position when you release the mouse button.

In the same way, you can also move assemblies you have selected. You can select the required assemblies using the object window or the **Arrow cursor** tool.

Select the assemblies you require. Then click a contour of the selection with the **arrow** cursor. Move the selected assemblies to the required position while holding down the mouse button.

Holding down the SHIFT key when you click on the selection will result in the following dialog box appearing:

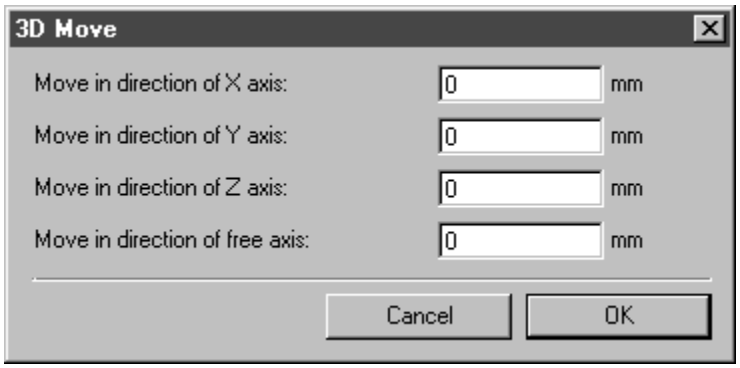

Enter the required values for the relevant axes. If you enter a positive value, the assemblies will be moved in the direction bearing the axis designation (**X**, **Y**, **Z**). If you enter a negative value, they will move in the opposite direction. If you have previously created a free axis (blue) with one of the **3D Select axis** tools, you can enter a value under **Move in direction of free axis**. The free axis arrow/the line with the arrow defines the positive direction. If there is no additional axis, no value can be entered here.

Confirm your entry in the dialog box by clicking **OK**. The selection now appears in the new position on the axes. Clicking **Cancel** closes the dialog box without moving the selection.

Note

3D object surface elements from files without structured import cannot be selected using the ***Arrow cursor*** *tool. Use the* ***Direct selection arrow cursor*** *tool for these elements. However, smaller surface elements that form a larger 3D object surface are not individually selectable—even though you can see their borders. This is because the smaller surfaces are merged into the larger surface before the 3D object is rendered.*

In the example shown, the drawing has been moved in positive direction along the X-axis.

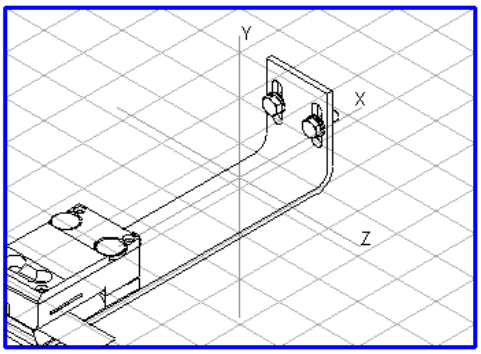

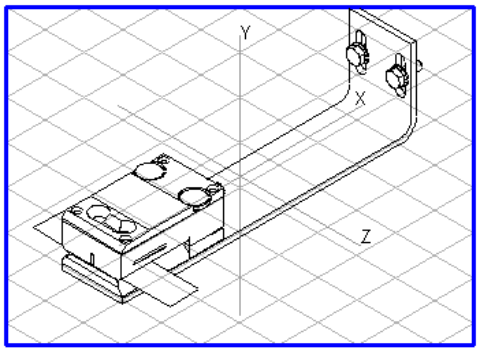

Moving with the Direct Selection Arrow Cursor in 3D mode

The **Direct selection arrow cursor** tool has the same move functions as the **Arrow cursor** tool.

Select the axis on which you want to perform the movement. Use the **Direct selection arrow cursor** tool to select one or more areas within an object.

Click on a contour of the selected area(s). Move the selected area(s) to the required position on the axis while holding down the mouse button.

If you hold down the SHIFT key while clicking on the selected area(s), the **3D Move** dialog box appears, as with the **Arrow cursor** tool. Enter the values for the movement and confirm your entry with **OK**.

Note

*3D transformations, such as **3D Move**, only apply to visible 3D objects by default. If you want 3D transformations to apply to both visible 3D objects and invisible parts inside of 3D objects, you must enable the* `CADprocess_TransformInvisible3DSubObjects` *preference setting. See* *3D Editing Preferences on page 135* *for instructions.)*

Rotation

It is possible to rotate all elements in Arbortext IsoDraw. To do this, select the relevant elements with the mouse. Then select the **Rotation** tool and position the **center** cursor on the point you want to rotate the selected object around.

Now drag the cursor over the screen while holding down the mouse button. During this process, the pointer changes to the **Rotation** cursor. You will also be able to see a line which gives an indication of the rotation angle plus an angle value. A

dotted rectangle indicates the orientation the objects will be rotated to. Move the cursor around the rotation point and release the mouse button once you have set the required angle.

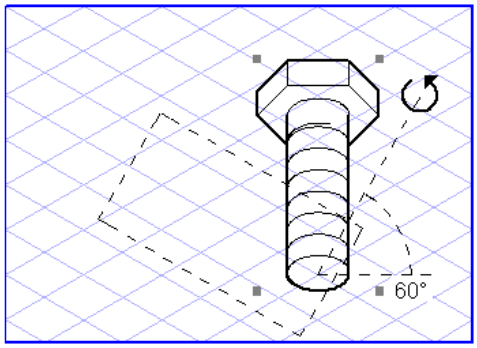

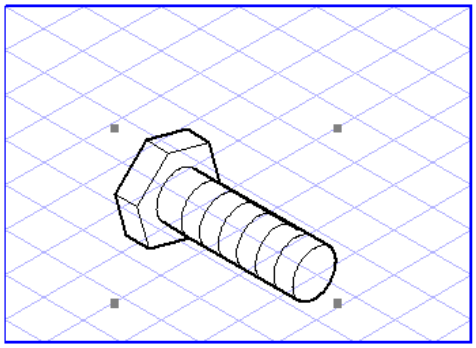

Note

The more you move the cursor away from the center of rotation, the more accurately you will be able to specify the angle.

You can also rotate your selection by means of the dialog box. Press the SHIFT key while you specify the rotation point by clicking with the center cursor.

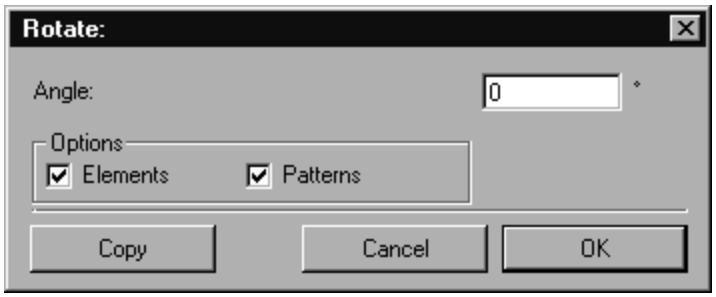

Enter the angle by which you want to rotate the selected object. You can also enter the value as a mathematical formula. You can use this entry option to assist you if, for example, you are looking for the distance required to ensure a uniform distribution of holes around the circumference or for the teeth of a gear wheel. Information on how to enter values can be found in the *Drawing Basics Tutorial*.

Example:

If you want to determine the angle of rotation for a circle of 8 holes, enter the formula "360/8".

Under **Options** you can select **Elements** and **Patterns**. If the **Elements** box is checked, only the elements selected are rotated. If the **Patterns** box is also checked, existing patterns will also be rotated. If you want to rotate patterns with reference to elements, check only the **Patterns** box.

Note

Bitmap patterns and placed files containing bitmap patterns cannot be rotated.

You can conclude your entry with **OK** or by clicking the **Copy** button. In the latter case, the selection remains unchanged. Instead a copy of the selection is generated and is rotated in accordance with your specifications.

Note

When rotating a circle, the orientation angle is not changed. The original points of the element - insofar as these are still present - also remain unchanged. All the points of the element - including those resulting from intersections - are merely moved around the circumference.

Rotation in 3D Mode

Applies to Arbortext IsoDraw Foundation only.

Clicking the **Rotation** tool allows you to rotate the drawing you have loaded around one of the three axes of the coordinate system. Using the arrow cursor, click on one of the X, Y or Z axes. The axis will be selected.

Now click the drawing area. Move the mouse in a circle around the coordinate system origin. While moving the mouse, you can see how the orientation of the drawing changes. During this rotation, the angle of rotation is displayed in the window bar at the bottom.

Once you have activated the rotation tool, you can switch to the arrow cursor temporarily by pressing the CTRL key.

If you now want to rotate the drawing around another axis, click the axis in question and repeat the procedure for rotation described above.

Holding down the SHIFT key when you click on the drawing area will result in the following dialog box appearing:

The entry field shows which axis (**X**, **Y**, **Z**) is currently selected (**Y axis** in the dialog box shown). Enter the required number of degrees and confirm by clicking **OK**. Clicking **Cancel** closes the dialog box without rotation occurring.

Rotation in 3D Mode with Arbortext IsoDraw CADprocess

Applies to Arbortext IsoDraw CADprocess only.

Clicking the **Rotation** tool allows you to rotate all the assemblies in a drawing around one of the three axes of the coordinate system or around a free axis. When working with the X, Y or Z axes, click your mouse on the desired axis. The axis will be selected. A free axis stays active for as long as it is visible.

Now click the drawing area. Move the mouse in a circle around the coordinate system origin. While moving the mouse, you can see how the orientation of the drawing changes. During this rotation, the angle of rotation is displayed in the window bar at the bottom.

You can also rotate a selection of assemblies in the same way. You can select the required assemblies using the object window or the **Arrow cursor** tool. Once you have activated the **Rotation** tool, you can switch to the **Arrow cursor** tool temporarily by pressing the CTRL key.

If you now want to rotate the selection around another axis, click the axis in question or define an axis using one of the 3D axis selectors and repeat the rotation procedure described above.

Holding down the SHIFT key when you click on the drawing area or click the selection will result in the following dialog box appearing:

The entry field shows which axis (**X**, **Y**, **Z** or **free**) is currently selected (**Y axis** in the dialog box shown). Enter the required number of degrees and confirm by clicking **OK**. Clicking **Cancel** closes the dialog box without rotation occurring.

Note

*3D transformations, such as **Rotation**, only apply to visible 3D objects by default. If you want 3D transformations to apply to both visible 3D objects and invisible parts inside of 3D objects, you must enable the* `CADprocess_TransformInvisible3DSubObjects` *preference setting. See* *3D Editing Preferences on page 135* *for instructions.)*

Perspective Rotation

Besides rotating elements in a flat view, you can also rotate them in perspective planes. You can use this function, for example, to generate perspective representations of hole circles.

Select the tool for **Perspective rotation** from the toolbox. The pointer becomes the **center** cursor.

For perspective rotation, you must specify a plane in which the elements you want to rotate are located. As when projecting elements onto perspective planes, an ellipse is also used for performing this task.

Holding down the SHIFT key, click the edge of an ellipse lying in the perspective plane in which you want to rotate elements. The same dialog box appears you already met in the section on rotation. Enter the required angle in degrees and confirm your entry by clicking **Copy**. A copy of the elements is generated and rotated by the corresponding amount.

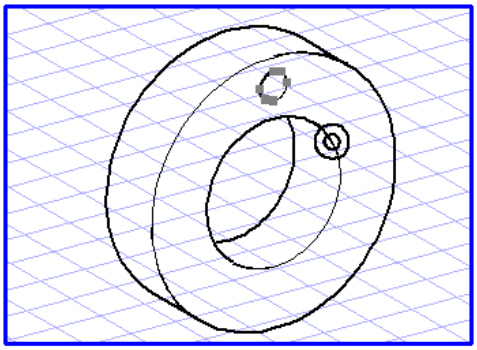

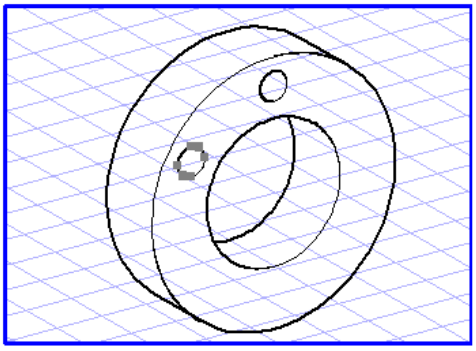

The perspective rotation also allows you to use all the options you already know from normal rotation, i.e. it is possible to rotate elements by clicking and dragging with the mouse.

Note

Image elements and placed files containing image elements cannot be rotated in perspective.

Reflection

All elements in Arbortext IsoDraw can be reflected. To do this, select the relevant elements with the mouse. Then select the **Reflection** tool and position the **center** cursor on the point where the center of reflection is to lie.

Now drag the cursor over the screen while holding down the mouse button. The cursor will change to the **Reflection** tool. You will also be able to see a line which gives an indication of the angle in which the reflection axis is located plus

an angle value. A dotted rectangle indicates the orientation the object will be reflected in. Move the cursor around the center of reflection and release the mouse button once you have set the required angle.

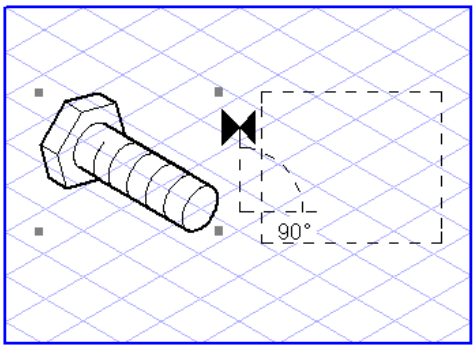

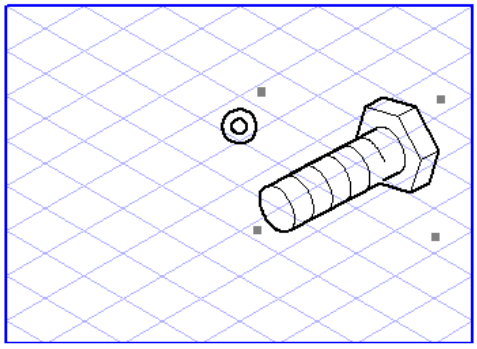

Note

The more you move the cursor away from the center of reflection, the more accurately you will be able to specify the angle.

You can also reflect your selection by means of the dialog box. Press the SHIFT key while you specify the point of reflection by clicking with the center cursor.

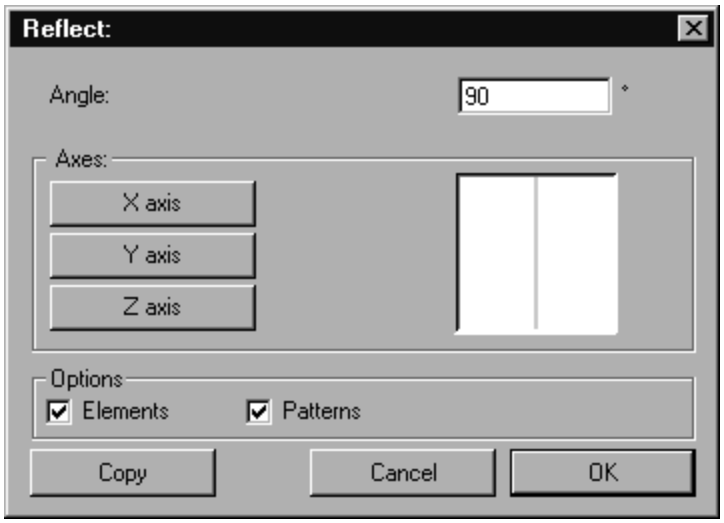

Three reflection axes are available for immediate selection by clicking the appropriate button.

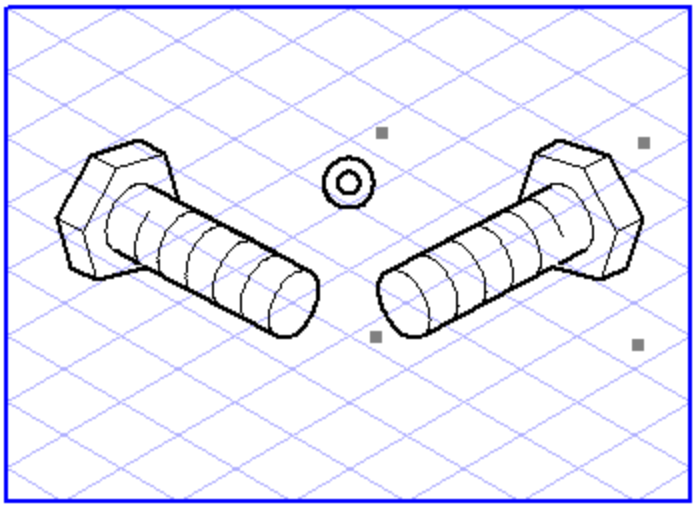

Under **Options** you can select **Elements** and **Patterns**. If the **Elements** box is checked, only the elements selected are reflected. If the **Patterns** box is also checked, existing patterns will also be reflected. If you want to reflect patterns with reference to elements, check only the **Patterns** box.

Note

Bitmap patterns and placed files containing bitmap patterns cannot be reflected.

You can conclude your entry with **OK** or by clicking the **Copy** button. In the latter case, the selection remains unchanged. Instead a copy of the selection is generated and is reflected in accordance with your specifications.

Reflection in 3D Mode

Applies to Arbortext IsoDraw Foundation only.

The **Reflection** tool can be used to reflect the drawing that has been loaded along a selected coordinate system axis. Click on the reflection tool and then on one of the X, Y or Z axes with the cursor. The drawing is reflected along the selected axis.

Once you have activated the **Reflection** tool, you can switch to the **arrow** cursor temporarily by pressing the CTRL key.

If you now want to reflect the assemblies along another axis, click the axis in question and repeat the reflection procedure described above.

Reflection in 3D Mode with Arbortext IsoDraw CADprocess

Applies to Arbortext IsoDraw CADprocess only.

The **Reflection** tool can be used to reflect all assemblies along a selected axis.

Click one of the axes of the coordinate system with the **arrow** cursor. The axis will be selected. If a free axis has been created and is visible, this axis will automatically be used as the reference axis. The free axis must not be clicked.

Note

If you have created a free axis based on a path or directly on an element, the additionally indicated line with an arrow is used as the reflection axis.

Click on the **Reflection** tool, then click with the cursor on the required axis. All assemblies are reflected along the free axis.

You can also reflect a selection of assemblies in the same way. You can select the required assemblies using the object window or the **Arrow cursor** tool. Once you have activated the **Reflection** tool, you can switch to the **arrow** cursor temporarily by pressing the CTRL key.

If you now want to reflect the assemblies along another axis, click the axis in question or define an axis using one of the 3D axis selectors and repeat the reflection procedure described above.

Note

*3D transformations, such as **Reflection**, only apply to visible 3D objects by default. If you want 3D transformations to apply to both visible 3D objects and invisible parts inside of 3D objects, you must enable the* `CADprocess_TransformInvisible3DSubObjects` *preference setting. See* *3D Editing Preferences on page 135* *for instructions.)*

Perspective Reflection

Besides reflecting elements in a flat view, you can also reflect them in perspective planes. You can use this function, for example, to generate symmetrical elements in perspective representations.

Select the **Perspective reflection** tool from the toolbox. The pointer becomes a center cursor.

For the purpose of perspective reflection, you must specify a plane containing the elements you want to reflect. As when projecting elements onto perspective planes, an ellipse is also used for performing this task.

Holding down the SHIFT key, click the edge of an ellipse lying in the perspective plane in which you want to reflect elements. The same dialog box appears you have already met in the section on reflection. In exactly the same way as when reflecting elements in the normal way, you specify the reflection axis in this dialog box.

Note

If you are uncertain about which reflection axis you should select, or if the reflection axis does not coincide with one of the major axes, simply draw a line which runs in the direction of the required axis. You can then consult the element info dialog box to find out the angle of the line you can specify as the reflection axis.

Confirm your entries by clicking **Copy**. A copy of the elements is generated and reflected accordingly.

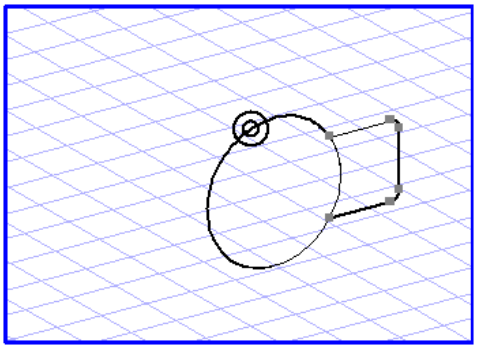

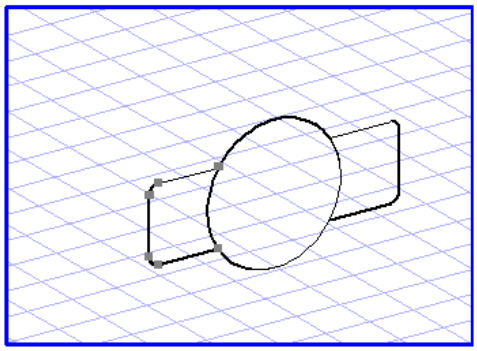

The perspective reflection also allows you to use all the options you already know from normal reflection, i.e. it is possible to reflect elements by clicking and dragging with the mouse.

Note

Image elements and placed files containing image elements cannot be reflected in perspective.

Scaling

In Arbortext IsoDraw you can enlarge or reduce elements in size. To do this, select the relevant elements with the mouse. Then choose the **Scale** tool. A dotted rectangle will appear around the selected object.

Position the **center** cursor at one of the four corners of this rectangle. If you now move the cursor towards the element while holding down the mouse button, the rectangle is reduced in size proportionally and a percentage value under 100

will appear to indicate you are reducing in size. If you move the cursor away from the selected object, you will enlarge the rectangle proportionally and the displayed percentage value will rise above 100.

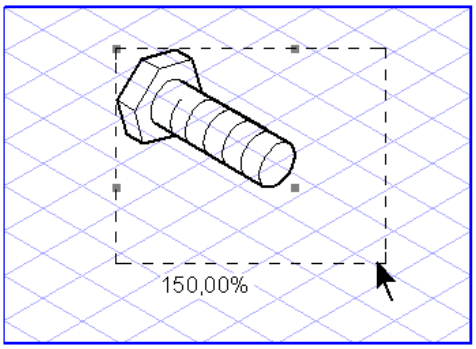

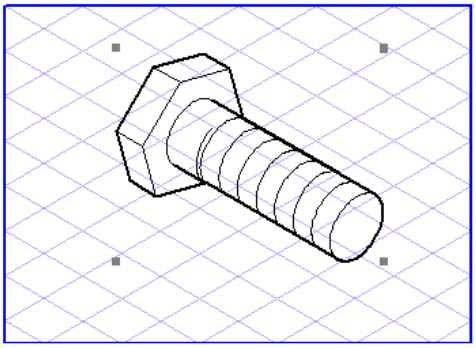

If you drag on a corner of the dotted rectangle and then hold down the CTRL key, the size of the rectangle changes non-proportionally. The width and height of the rectangle are enlarged or reduced in accordance with the movement of the mouse. A percentage value is displayed for the width and the height respectively.

You can also scale your selection by means of the dialog box. Press the SHIFT key while you use the center cursor to click the point which is to form the scaling center.

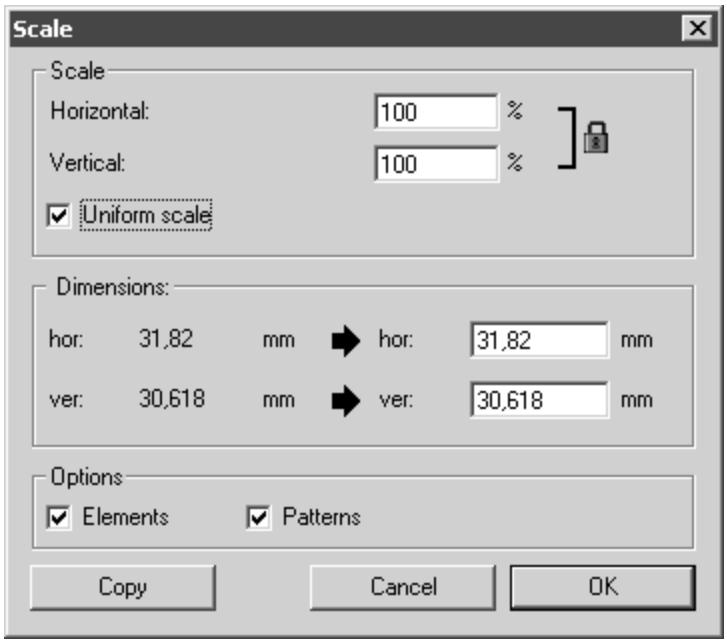

Scale

When **Uniform scale** is selected, a tick appears in the box next to it. You can then simply enter a percentage value in one of the two entry fields next to **Horizontal** or **Vertical**. The illustration is then enlarged or reduced proportionally in accordance with the value entered.

If **Uniform scale** is not selected, the scaling is performed in accordance with the values entered in the **Horizontal** and **Vertical** fields. If the entries have different values, the selected element is scaled non-proportionally.

Alternatively, you can also enter the value using a mathematical formula. This may save you having to work out a percentage value. When entering values, observe the calculation rules. Information on how to enter values can be found in the *Drawing Basics Tutorial.*

Dimensions

In the fields next to **hor** (horizontal) or **ver** (vertical), the corresponding values appear for the extent of the selection when the percentage values are entered under **Scale**. If you want to define an exact extent for the selection, you can enter this extent here directly in the entry fields. If uniform (proportional) scaling is selected,

you must enter a value in one field. If non-uniform (non-proportional) scaling is set, you must enter a value in both fields. The actual values are indicated to the left of the entry fields.

Options

Under **Options** you can select **Elements** and **Patterns**. If the **Elements** box is checked, only the elements selected are scaled. If the **Patterns** box is also checked, existing patterns will also be scaled. If you only want to scale the patterns without changing the elements, check only the **Patterns** box.

Note

Bitmap patterns and placed files containing bitmap patterns cannot be scaled.

You can conclude your entry with **OK** or by clicking the **Copy** button. In the latter case, the selection remains unchanged. Instead, a copy of the selection is generated and is scaled in accordance with your specifications.

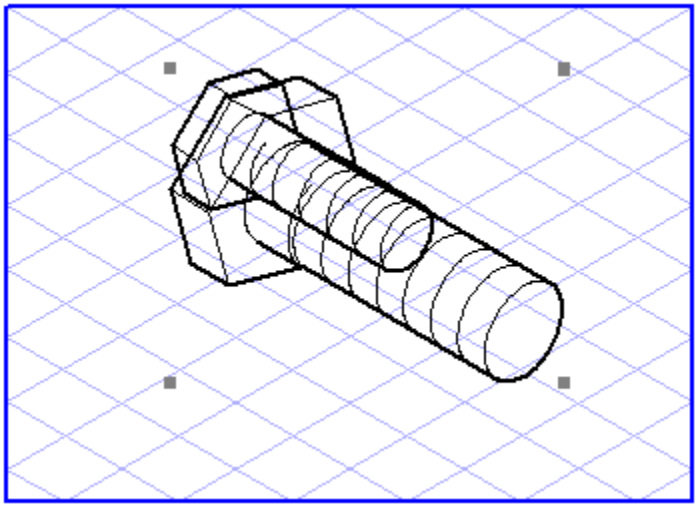

Note

If you scale image elements, the size will remain unchanged. The pixels will be scaled instead. A white edge is produced when elements are reduced in size, whereas parts of the pixels are lost when elements are enlarged. The element info dialog box for image elements provides you with further options for changing the size of an image element.

Scaling in 3D Mode

Applies to Arbortext IsoDraw Foundation only.

It is sometimes the case that CAD drawings drawn in a 1:1 scale are much too large to be used, for example, for export as a raster image. In this case, click the **Scaling** tool. You can now enlarge or reduce all the elements in the drawing by clicking the drawing area and moving the mouse. Move the mouse to the center point of the coordinate cross to reduce the scale. Dragging it towards the edge of the sheet enlarges the scale. While moving the mouse, you can see how the size changes. The scaling percentage is displayed in the window bar at the bottom of the 3D window.

Once you have activated the **Scaling** tool, you can switch to the **arrow** cursor temporarily by pressing the CTRL key.

Scaling is implemented around the center of the drawing.

Holding down the SHIFT key when you click on the drawing area or click the selection will result in the following dialog box appearing:

When performing scaling operations, it is not important which axis is selected. Simply enter the required percentage and confirm by clicking **OK**. Clicking **Cancel** closes the dialog box without scaling the elements.

Scaling in 3D Mode with Arbortext IsoDraw CADprocess

Applies to Arbortext IsoDraw CADprocess only.

It is sometimes the case that CAD drawings drawn in a 1:1 scale are much too large to be used, for example, for export as a raster image. In this case, click the **Scaling** tool. You can now enlarge or reduce all the elements in the drawing by clicking the drawing area and moving the mouse. Move the mouse to the center point of the coordinate cross to reduce the scale. Dragging it towards the edge of the sheet enlarges the scale. While moving the mouse, you can see how the size changes. The scaling percentage is displayed in the window bar at the bottom of the 3D window.

If you only want to scale individual assemblies (e.g. duplicated assemblies for an additional view), you can use the scaling tool in the same way. Select the required entries. You can select the required assemblies using the object window or the arrow cursor.

Once you have activated the **Scaling** tool, you can switch to the **arrow** cursor temporarily by pressing the CTRL key.

Individual modules are scaled around the center of the drawing.

Holding down the SHIFT key when you click on the drawing area or click the selection will result in the following dialog box appearing:

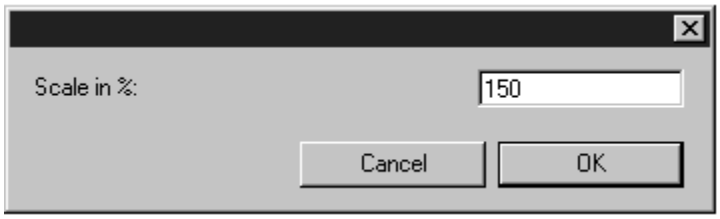

When performing scaling operations, it is not important which axis is selected. Simply enter the required percentage and confirm by clicking **OK**. Clicking **Cancel** closes the dialog box without scaling the elements.

Note

Scaling in 3D mode can affect the quality of the projected drawing. For best results after projection, retain the original size of the 3D data for projection. If your work requires scaling, return the drawing to its original size prior to projection. You can then scale the projected drawing without affecting its quality.

Note

3D transformations, such as ***Scaling****, only apply to visible 3D objects by default. If you want 3D transformations to apply to both visible 3D objects and invisible parts inside of 3D objects, you must enable the* `CADprocess_TransformInvisible3DSubObjects` *preference setting. See* *3D Editing Preferences on page 135* *for instructions.)*

Shearing

The **Shearing** tool allows you to bend and distort elements. To do this, select the relevant elements with the mouse. Then select the **Shearing** tool. A dotted rectangle will appear around the selected object.

Position the **center** cursor at one of the four corners of the dotted rectangle. Holding down the mouse button, drag the cursor. The rectangle changes into a rhombus. Dragging the cursor to the right or left bends the elements in a vertical

direction. Moving the cursor up or down produces a horizontal bending effect. The selected elements are bent relative to their common center point. The figures show a drawing before editing, after horizontal bending and after vertical bending.

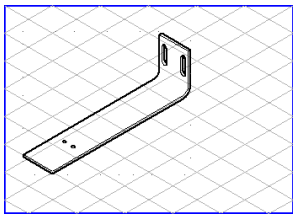
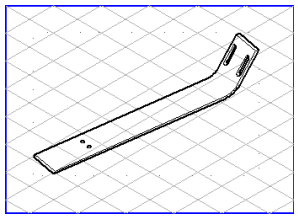
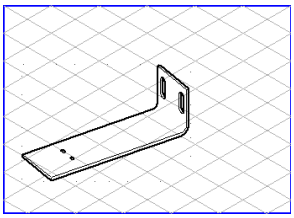

If you drag the corner of a dotted rectangle then hold down the CTRL key, the rectangle changes to a rhombus and the length of its sides change in tandem with the movement of the cursor. The elements can be distorted as desired.

You can also shear your selection using a dialog box. Hold down the SHIFT key while you click the selection with the center cursor.

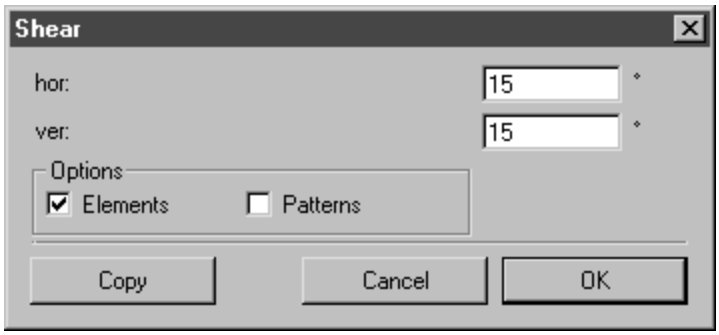

Hor

If you want to bend horizontally, enter the value for the angle here. The value must be between 89° and -89°.

Ver

If you want to bend vertically, enter the value for the angle here. The value must be between 89° and -89°.

You can also enter the values as a mathematical formula. Information on how to enter values can be found in the *Drawing Basics Tutorial*.

Under **Options** you can select **Elements** and **Patterns**.

If the **Elements** box is checked, only the elements selected are sheared. If the **Patterns** box is also checked, existing patterns will also be sheared. If you want to shear patterns with reference to elements, check only the **Patterns** box.

Note

Bitmap patterns and placed files containing bitmap patterns cannot be sheared.

You can conclude your entry with **OK** or by clicking the **Copy** button. In the latter case, the selection remains unchanged. Instead, a copy of the selection is generated and is sheared in accordance with your specifications.

17
Ellipse Value

This toolbox field allows you to specify the current ellipse value. This value determines the degree to which a circle is to be tilted relative to the observer plane. A circle in a technical drawing, for example, is tilted by 90° and thus has an ellipse value of 90°. If it is now tilted slowly backwards, the ellipse value reduces until only a line remains. The ellipse value is then 0°.

The current ellipse value is shown as a round figure in the toolbox. If you click this field, a pop-up menu will appear from which you can select an ellipse value. The **Standard ellipse** is set when the program is first started.

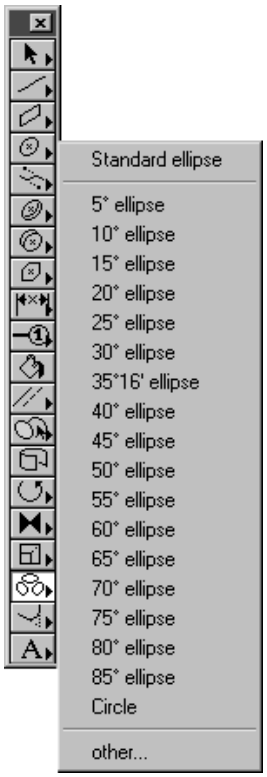

Enter the required value in degrees. Click **OK** to confirm your entry or **Cancel** to close the dialog box without making any changes.

If you want to set the ellipse value to that of an existing ellipse, you must first select the particular ellipse. Then click the toolbox field displaying the ellipse value while holding down the ALT key. Once you release the mouse button, the value specified in the toolbox is set to the ellipse value of the selected ellipse.

Three reflection axes are available for immediate selection by clicking the appropriate button.

Standard Ellipse

Three major axes are defined in each parallel perspective. The X axis and Z axis are represented by the active grid. The Y axis is always vertical and therefore never appears in the representation.

Each major axis features exactly one ellipse which represents a circle on this major axis. The three ellipses on the three axes do not necessarily have to be the same, they are only identical in isometric perspective.

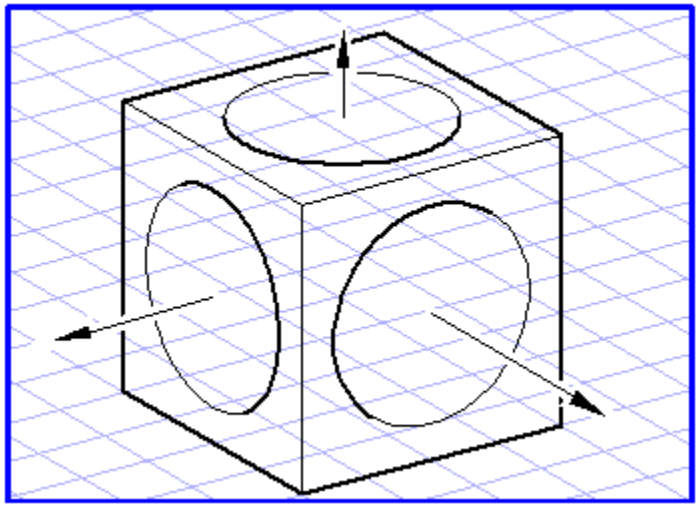

If you select the **Standard ellipse** option, ellipses, threads or polygons are generated during dragging which lie on one of the major axes.

If you need to draw ellipses lying outside the major axes, you generally cannot use the **Standard ellipse** ellipse value. Instead use **Element** ▸ **Find ellipse** to generate the appropriate ellipse.

Note

In most cases, you won't need to know the actual value of the ellipse value. If, however, you do need to know this value, you can always look it up at any time in the element info dialog box.

Changing the Ellipse Value

You can change the ellipse value of each ellipse or thread in the element info dialog box. If you want to change the ellipse value of more than one element, this can be done using the toolbox. Firstly, select the elements in question and then set the current ellipse value in the toolbox to the value you require. All the selected ellipses or threads will be changed accordingly.

18
Tangent

The tangent functions help you to interconnect lines and ellipse segments. Depending on the given situation, you can use one of the four following variants: **Fillet**, **Tangent between ellipse and point**, **Tangent between two ellipses** or the **Chamfer** tool.

Fillet

You can use the **Fillet** function to round a corner between two lines, to connect two ellipses using an ellipse arc or to connect a line and an ellipse using an ellipse arc.

Note

The following points should be noted with the three fillet variations:

Line - Line

The lines must intersect but need not share a common end point. The fillet ellipse is based on the current ellipse value.

Line - Ellipse

The fillet ellipse is assigned the same ellipse value and orientation angle as the ellipse.

Ellipse - Ellipse

Both ellipses must have the same ellipse value and orientation angle as the ellipses. These values are assigned to the fillet ellipse.

Select the **Fillet** tool from the toolbox. The pointer becomes an **arrow(1)** cursor. This indicates that you now have to select the first of the two elements (line or ellipse). Click on an element. When you have hit the element, the pointer changes to an **arrow(2)** cursor. This prompts you to select the second element (line or ellipse). Now click the second line and hold down the mouse button.

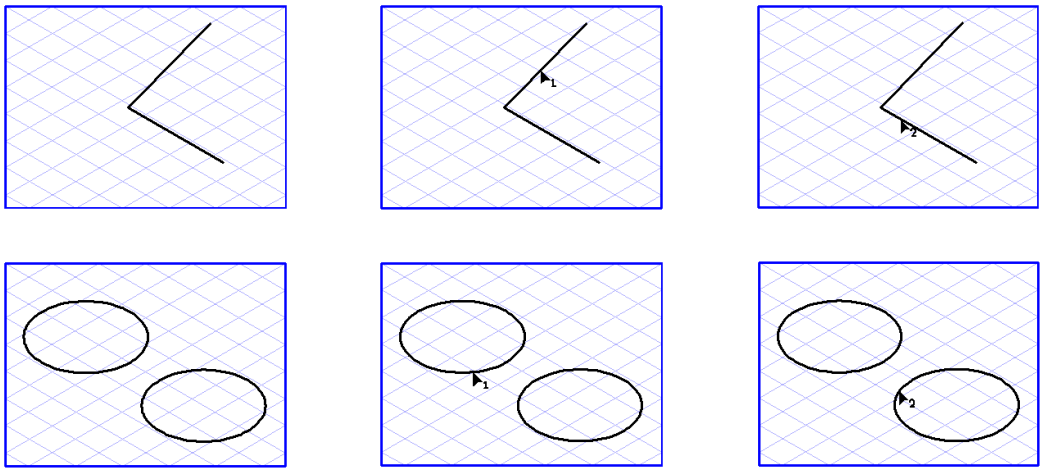

An auxiliary ellipse appears between the two elements.

The auxiliary ellipse between two lines can now be controlled with the mouse as any usual ellipse, the center point is the intersection point of the two lines. In the picture the imagined ellipse is depicted with a dashed line.

The line/ellipse and ellipse/ellipse variants angle and size of the auxiliary ellipse can be controlled with the mouse.

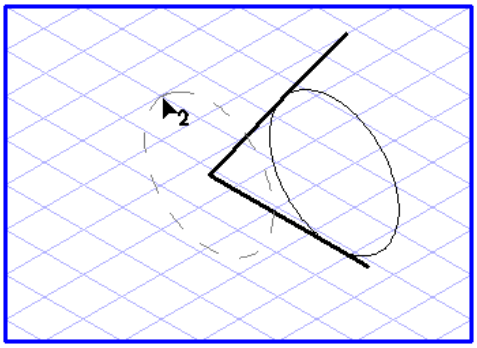

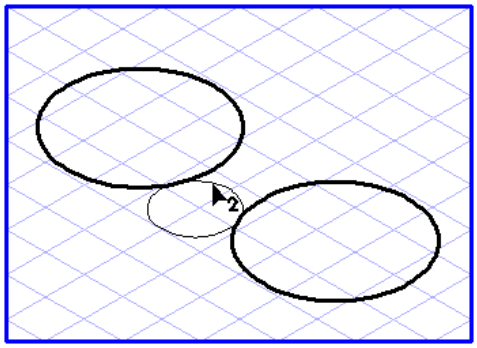

As soon as you release the mouse button, the fillet ellipse will be fitted into position and cut. The lines will also be cut at the ellipse tangent points. You can now simply delete the line segments you no longer need.

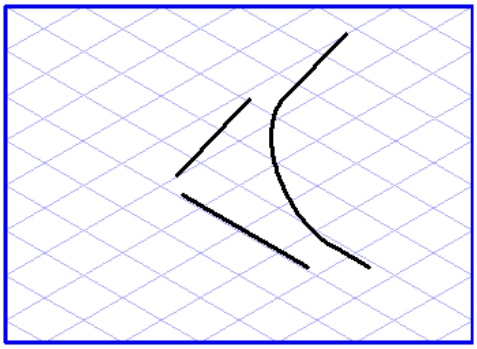

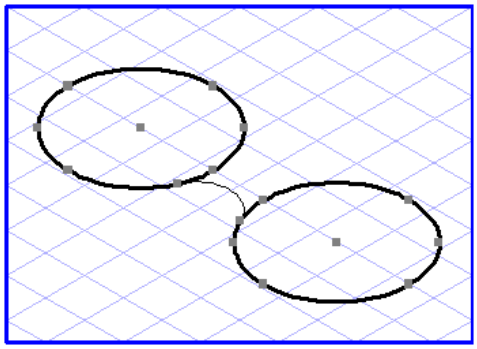

If you want to define the ellipse more precisely by entering numerical values, depress the SHIFT key before releasing the mouse button. The **Element info** dialog box for the fillet ellipse then appears. You can change the values here at will. As soon as you confirm with **OK** the window closes and the fillet is generated.

Arbortext IsoDraw remembers the values of the last fillet it generated. If you wish to create further fillets with the same ellipse value, orientation angle and diameter you do not need to re-enter these.

Drag the fillet in the usual way with the mouse. However, before releasing the mouse button press the SHIFT key and the ALT key. As soon as you now release the mouse button a fillet will be generated which has the same values as the one generated earlier.

Tangent between an Ellipse and a Point

The **Tangent between an ellipse and a point** tool resolves the opposite situation: the ellipse is available but not the lines. Select the function from the toolbox. The pointer becomes an **arrow (ellipse)** cursor. Click the required ellipse and drag the tangent towards the end point.

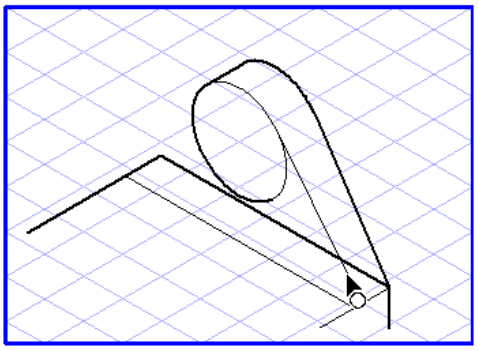

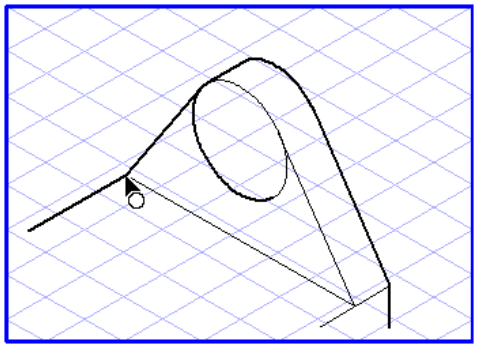

Note

The point at which you click the ellipse defines the tangent you will obtain.

Tangent between Two Ellipses

The third variant is the **Tangent between two ellipses** tool. Select this tool from the toolbox. The pointer becomes **arrow (ellipse)** cursor. Click the first of the two ellipses and drag the tangent towards the second ellipse.

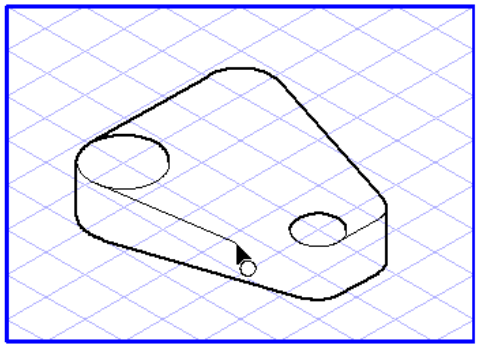

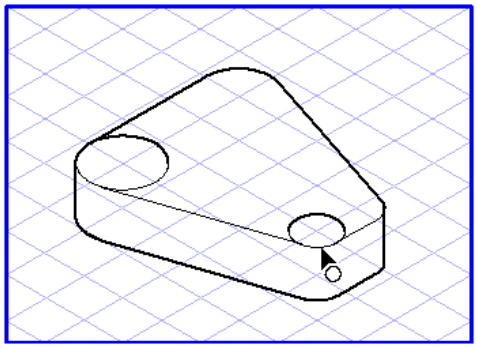

Note

The points at which you touch the ellipses define the tangents you will obtain.

Chamfer Tool

The **Chamfer** tool can be used to chamfer a corner between two lines.

Note

The lines must intersect but need not share a common end point. The ellipse value of the auxiliary ellipse depends on the current grid.

Select the **Chamfer** tool from the toolbox. The pointer becomes an **arrow(1)** cursor. This indicates that you now have to select the first of the two lines. Click on one of the two lines. When you have hit the line, the pointer becomes an **arrow(2)** cursor, thereby requesting you to select the second line. Now click the second line and hold down the mouse button.

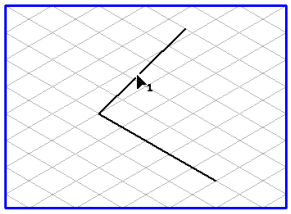

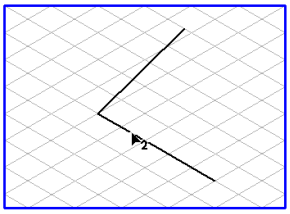

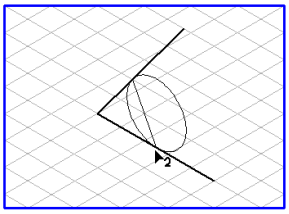

An auxiliary ellipse appears with an interlying line.

The auxiliary ellipse between the two line elements can now be checked using the mouse in the same way as a normal ellipse. The line (chamfer) inside the ellipse moves according to the orientation of the ellipse. In every orientation of the auxiliary ellipse, the line always touches the line elements with its end points. The orientation and size of the auxiliary ellipse determine the orientation and length of the chamfer.

The chamfer is fitted into position as soon as you release the mouse button. The lines are also chamfered at the contact points. You can now simply delete the line segments you no longer need.

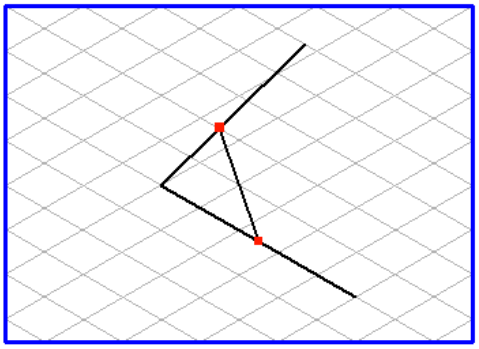

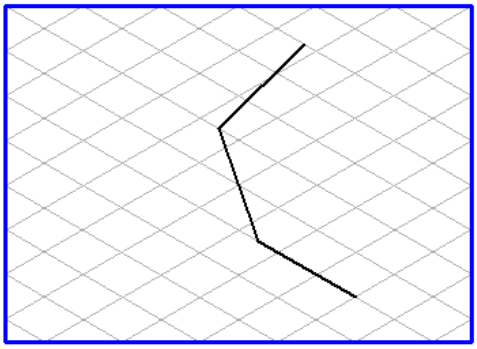

If you want to define the length of the chamfer more precisely, depress the SHIFT key before releasing the mouse button. The following dialog box appears:

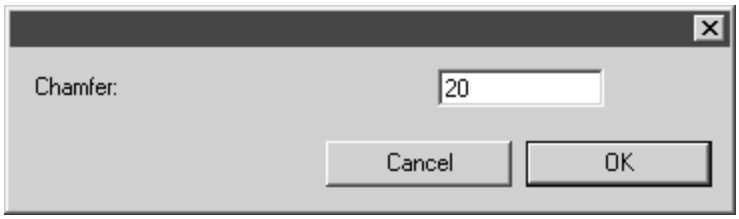

You can change the length of the chamfer as required in this dialog box. The orientation of the chamfer in relation to the two line elements remains as specified by the auxiliary ellipse. Your entry only changes the length, i.e. the distance of the chamfer from the point where the lines intersect.

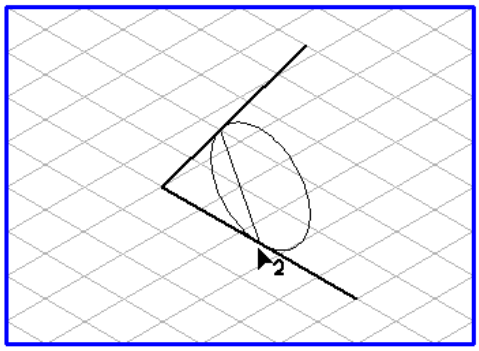

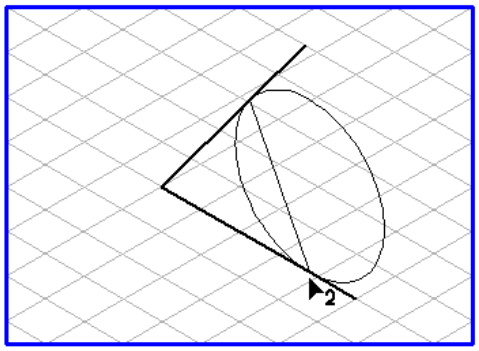

As soon as you confirm with **OK** the window closes and the chamfer is generated.

19
Text

Texts such as lettering, tables, and numbering in Arbortext IsoDraw are generated as text elements. A text element can consist of a single character, a number or quantities of text. This text can be changed in various ways by commands in the **Text** menu.

There are two ways of entering text. With the upper **Text** tool from the pop-up menu, you can select the starting position for entering text in the drawing area. The text you enter continues along the same line until you specify the end of the line. When selecting the lower **Text** tool, you should first drag open a box. The text

remains within the box when entered. The text is therefore limited by the sides of the box. You can change the size of the box at will. These options will help you if you want to utilize a specific space requirement when you start entering text.

Text Tool

Select the **Text** tool from the toolbox. Move the **insertion** cursor to the required point of the drawing and click the mouse. Located behind the flashing insertion cursor is the paragraph sign. Type in your text.

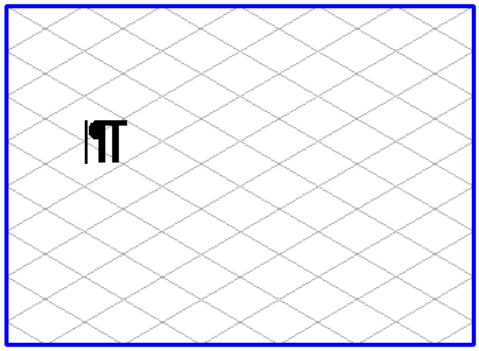

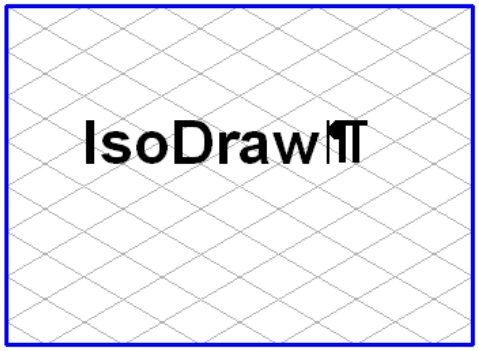

Your text may well have a different appearance to that shown here because you have set different text attributes.

You conclude entering your text by clicking the insertion marker outside the new text element or inside the toolbox. You can also conclude text entry by means of the ENTER key.

Text with Box Tool

Select the **Text with box** tool from the toolbox. The pointer becomes a **drawing** cursor. Move the cursor to the point of your drawing where you want the text to start. Click the mouse. The pointer becomes an **arrow** cursor. Holding down the mouse button, drag open a dashed rectangle towards the bottom right. This box sets the limit for the running text. As soon as you release the mouse button, the flashing **insertion** cursor appears at the top left. Located behind the insertion cursor is the paragraph sign. Type in your text. Once the running text reaches its limit, you will see that it jumps automatically to the next line. Your text may well have a different appearance to that shown here because you have set different text attributes.

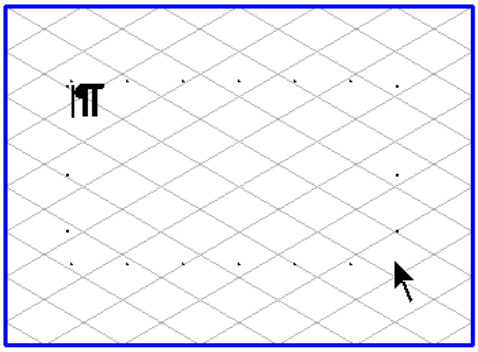

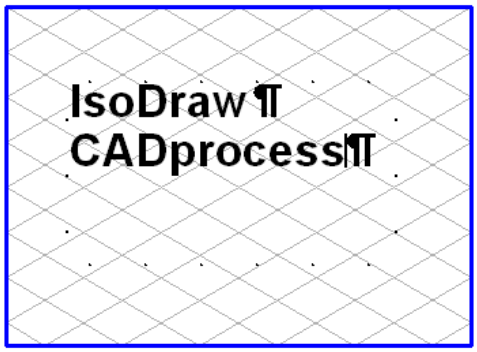

Note

If you have entered no blanks, tabs or a line end in a particular line, the text will run beyond the edge of the box frame. Once you leave entry mode, you will see a small red arrow along the right-hand side of the selected text element. Click the arrow and drag the box until you can no longer see the arrow. You will now be able to see all of the text you have entered.

If you enter more text than will fit in the box, the last portion of text you enter will not be displayed. To display the rest of the text, exit entry mode. You will see a small red arrow on the selected text element. Click the arrow and drag the box until you can no longer see the arrow. You will now be able to see all of the text you have entered.

You conclude entering your text by clicking the insertion marker outside the new text element or inside the toolbox. You can also conclude text entry by means of the ENTER key.

Vertical Text Entry

You can also type in text vertically using both text tools.

If you use the **Text** tool, hold down the SHIFT key and click on the required point in your illustration, you can write from the bottom upwards. Text is positioned to be read from the right. If you hold down the SHIFT key and ALT key and click the mouse, your text will be written from the top downwards. The text is positioned to be read from the left.

If you select **Text with box** tool, the same keyboard commands apply for vertical entry. When selecting from bottom upwards, the insertion cursor is at the bottom left of the box and if you select from the top downwards, the insertion cursor is at the top right of the box.

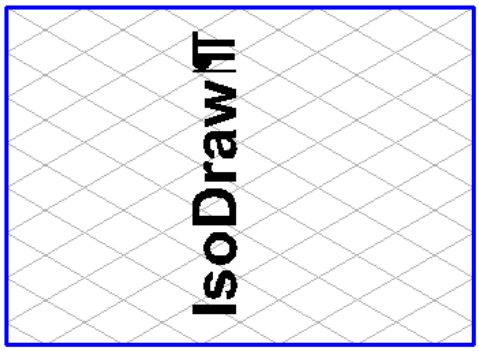

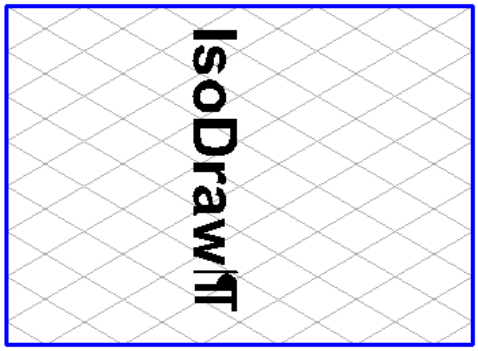

Note

Your may at any time rotate the text elements to the desired angle.

Selecting Text Elements

When you create a new text element it naturally contains no text. When using the **Text** tool, the insertion cursor flashes at the point where you have clicked. When using **Text** tool with box, it flashes at the top left-hand corner. The insertion cursor and paragraph sign will follow any entries you now make. The insertion cursor always flashes in front of the position where the next character will be entered.

The attributes of the newly entered text will be based on the settings in the **Text** menu or the active text format. These settings will include the font, the font size and the font face. If you now change one of these settings, e.g. select a different font, text entered after this will be governed by the new attribute. Text entered before the new setting will remain unchanged.

In the case of tabs, the change of setting will always affect the complete paragraph between two paragraph signs, i.e. the text already entered. The same also applies for text formats.

However, should you wish to change the attributes of a text element subsequently or to delete it, you must select it first. To do this, move the insertion cursor in front of the first character or behind the last one you want to select. Now press the mouse button and move the insertion cursor over the text to be selected. The text is now highlighted in the selection color. You can also make selections using the arrow keys while holding down the SHIFT key. If you want to select a word, double-click it with the mouse.

You can also select the entire text. You do this by choosing **Edit ▸ Select all**, or, by double-clicking a text element with the **arrow** cursor.

All commands you give now relate directly to the selected text element. Key in a number of characters, for example: the selected text will be overwritten. Or press the DELETE key to delete the selection. If you now select a different font, only the selected text will be changed. The font size and face will also apply for the selection only.

Changes to tabs or text formats always apply to the entire paragraph between two paragraph signs, i.e. they may also be applied to text which has not been selected.

Note

Leading, alignment and character fill can be changed at any time, even if no text has been selected. These attributes always apply to the entire text element.

Working with Tabs and Text Formats

Tabs

To set tabs, choose **Text ▸ Tabs**. The tabs which are set apply to the selected text and apply for at least one paragraph between two paragraph signs. This is also the case if the flashing insertion cursor is located at any point in the text.

Select a paragraph and set a tab. You will then see a red symbol for the tab type in the selected position above the text element. Click the required point in the text and press the **TAB** key. The following text jumps to the tab stop. An arrow appears in the text between the preceding text and the tab stop.

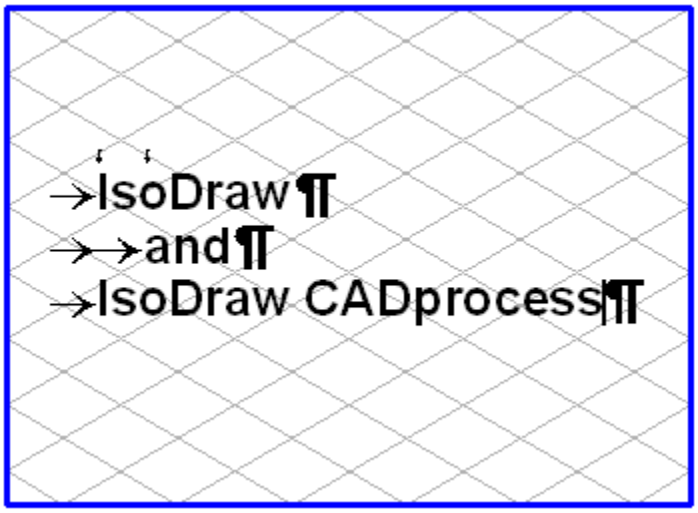

If you have created different tabs for different paragraphs in the text element, the symbols or the positions of these symbols will change in the tab bar, depending on the position of the insertion cursor.

Once you have concluded your entry, neither the tab bar nor the arrows for tab increments remain visible.

Text Formats

It is useful in many instances to use fixed text formats. Arbortext IsoDraw allows you to do this in the **Attributes** window. The text format contains all the attributes that can be set in the **Text** menu. These include the font, font size, font face and tabs. Where new text is entered, the attributes of the active text format are applied to this text. A text format is applied for at least one paragraph between two paragraph signs. The commands in the **Text** menu can be used to change texts which have been assigned formats. If you then change the text format, these changes will be retained.

Character Fill for Texts

You can select the graphical attributes for texts using the **Text** menu or when defining a text format. Arbortext IsoDraw also allows you to assign color fills to text elements or individual characters by means of the **Fills** window.

Changing the Text Element

A text element in a drawing behaves like most other elements, i.e. it can be edited by such functions as duplicate, cut, copy, paste, group, delete and by the transformations. However, these changes always refer to the text element in its entirety, the text it contains remains unchanged.

Note

One exception to this rule is when scaling text elements. The font size changes by the appropriate percentage when scaling. All other attributes such as the position of tabs remain unchanged.

If you wish to edit the text, you can do so by selecting the **Text** tool and clicking on the text element. Change your text as you wish and conclude your changes by clicking in the toolbox.

This procedure remains the same even if the text element has already been transformed, e.g. by tilting it into a perspective plane.

You can change all the attributes of the text from outside. To do so select the text element with the **Arrow cursor** tool and then choose the required attributes from the **Text** menu. These attributes are then applied to the entire text in the element. The same function also applies if you assign a different text format.

Keyboard Commands for Selecting Text Elements

Select characters to the right of the insertion cursor:	SHIFT+RIGHT ARROW
Select all characters from the insertion cursor to the end of the line:	SHIFT+ CTRL+RIGHT ARROW
Select characters to the left of the insertion cursor:	SHIFT+LEFT ARROW
Select all characters from the insertion cursor to the start of the line:	SHIFT+CTRL+LEFT ARROW
Select line from the insertion cursor downwards:	SHIFT+DOWN ARROW
Select line from the insertion cursor upwards:	SHIFT+UP ARROW

Special Function for Changing Numbers

Key Combinations

In order to facilitate work with part numbers it is possible to change the contents of a text element without having to work with the **Text** tool. The prerequisite for this is that the text contains a number. Select the text element with the **Arrow cursor** tool.

Number increments by one	CTRL+UP ARROW
Number decrements by one:	CTRL+DOWN ARROW
Number increments by five:	CTRL+SHIFT+UP ARROW
Number decrements by five:	CTRL+SHIFT+DOWN ARROW

Notes about Adobe Type Manager™

Arbortext IsoDraw requires that the Adobe Type Manager™ is installed. This software is used to enhance the appearance of fonts on the screen.

The Adobe Type Manager documentation contains information on how to install fonts. Generally speaking, you should remove True Type fonts from your system if you have the corresponding Type 1 fonts.

Note

If you have not installed the ATM or not all PostScript™ fonts are available on your system, you may encounter problems in displaying your texts on the screen.

III

3D Mode

Applies to Arbortext IsoDraw CADprocess only.

20

Working in 3D Mode

Applies to Arbortext IsoDraw CADprocess only.

Arbortext IsoDraw CADprocess enables you to import 3D CAD data and covert it to 2D objects and elements in your technical illustration. This can save you a great deal of drawing time and effort when 3D CAD data exists for the subject of your technical illustration.

Preparing 3D CAD files for import and conversion to 2D is easy. After importing, you can manipulate 3D objects in Arbortext IsoDraw CADprocess to get the view you want. When you are satisfied, simply project your view onto the 2D drawing plane with one click—then continue editing in 2D.

Introduction to 3D Mode

Applies to Arbortext IsoDraw CADprocess only.

Whenever a file with 3D data in one of the supported formats is opened or placed, Arbortext IsoDraw CADprocess operates in 3D mode. There are two distinct features in 3D mode that enable you to distinguish it from the usual working window. The first is a three-dimensional coordinate system on the drawing area and the second is a standard toolbar with a range of tools.

The figure below contains a window with these typical 3D-mode features.

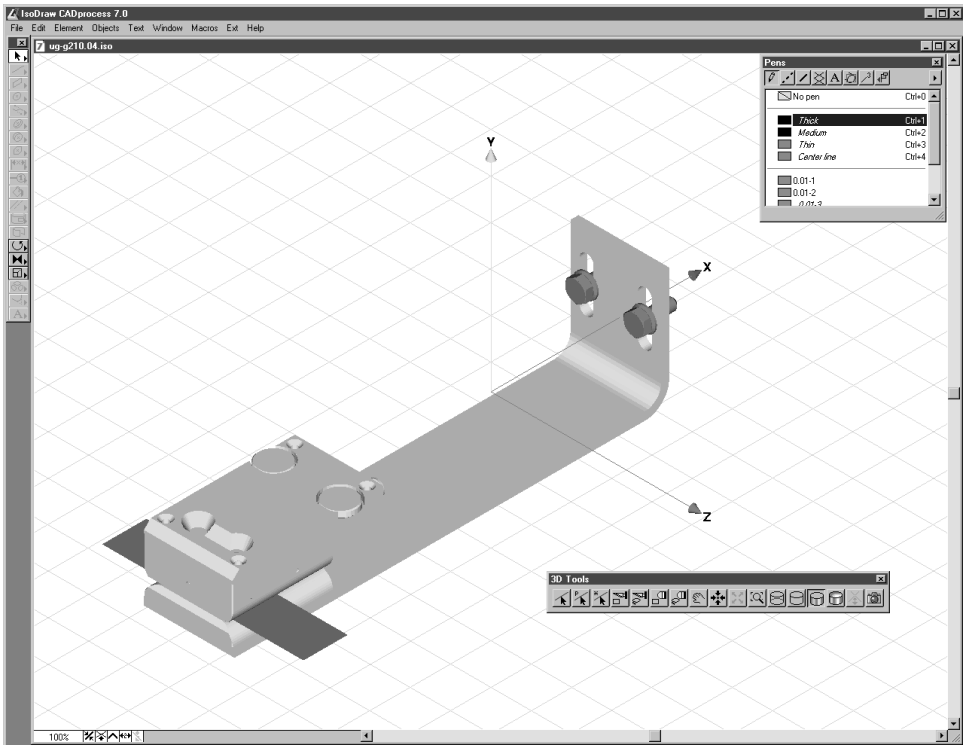

The following description of working in 3D mode relates to structured 3D data for the IGES, VRML, and Wavefront formats. For AutoCAD DWG and DXF formats, the files consist of surfaces instead of objects or groups.

The drawing converted from 3D data still contains all 3D information. In order to process this information, this data must be converted into a 2-dimensional illustration. To allow you to utilize all the possibilities which 3D data offers, you can use various tools and menu commands to change data in **3D mode**. Each edit function can be applied to both the entire drawing and/or selected assemblies. Once you have edited the drawing, the optimization process represents the last step from the CAD drawing to the technical illustration. Before they are converted to 2D illustrations, placed files can be edited in 3D mode in the same way as imported files.

Saving Imported Files as 3D Drawings

Applies to Arbortext IsoDraw CADprocess only.

If you have pasted the file using the browser window, (see Show Browser Window on page 337) the file appears in a window called **Untitled**. If you have opened the file using the **Open file** command, the window has the name of the original file. If a file with the same name has already been saved in the open file's folder, the file will appear in a window called **Untitled**. If you select **File ▸ Save** or **Save as**, you will save the file together with all the three-dimensional information it contains in the form of an Arbortext IsoDraw file.

Note

In order to retain the three-dimensional information of a drawing, you must ensure that you do the following during projection into a 2D illustration:

When clicking the camera button you must hold down the ALT key. If you do not hold down the ALT key when clicking the camera button, the now two-dimensional drawing will be saved under the same name as the 3D drawing. As a result, the three-dimensional information will be lost.

If you reopen this file later, you will be able to create additional 2D illustrations in 3D mode. This provides you with repeated access to the 3D data once a CAD file has been converted, without having to repeat the structured import process.

In this way, you can still have Arbortext IsoDraw CADprocess convert CAD files automatically without having to dispense with the manipulation options offered by 3D mode. The files are converted and saved as 3D files. Choose **File ▸ Batch Process**to do this (refer to Batch Process on page 67).

Tools and Menu Commands in 3D Mode

Applies to Arbortext IsoDraw CADprocess only.

The 3D mode window looks different from the normal Arbortext IsoDraw window due to the coordinate cross located in the center of the drawing area. The axes are labeled X, Y and Z and represent the coordinate system for the loaded assemblies/elements.

You will also see the special toolbar containing 3D-data editing tools. If you look closely at the toolbox, you will notice that a number of tools have been dimmed. While working in 3D mode, these tools are unavailable.
Arbortext IsoDraw CADprocess also has additional menu commands in the **Window** menu.

3D Tools Toolbar

This toolbar is used to select tools used when editing 3D data. When default settings are selected, the toolbar contains all the tools that can be activated only via the toolbar and the display options.

The tools on the **standard toolbar** are described in 3D Tools on page 677.

You can edit the toolbar at any time by choosing **Window** ▸ **Toolbar**. You can delete **3D tools** and add menu commands. You can also create an additional toolbar to suit your own requirements.

You can find a description of how to create and edit a toolbar in Toolbars on page 447.

Menu Commands

In principle, all menu commands that are not grayed out can be applied to 3D data. When working in 3D mode in particular, you will find the **Projection** and **Display** commands in the **Window** menu and the **3D Options** dialog box under the **Preferences** command in the **Edit** menu

These menu commands, their settings, and selection options are described in separate topics. Information on the different functions of certain menu commands when used in 3D mode can be found in the topics that deal with those commands.

Tools from the Toolbox

As you can see, most of the tools are grayed out and unavailable in 3D mode. The arrow cursor and the three transformation tools are available for editing 3D data.

You can find descriptions on how these tools are used in 3D mode in the topics devoted to the individual tools, located after the descriptions of their usage outside 3D mode.

Notes on the Description

3D Tools Toolbar

This toolbar is used to select tools used when editing 3D data. When default settings are selected, the toolbar contains all the tools that can be activated only via the toolbar and the display options.

The tools on the **standard toolbar** are described in Tools and Menu Commands in 3D Mode on page 673.

You can edit the toolbar at any time by choosing **Window ▸ Toolbar**. You can delete **3D tools** and add menu commands. You can also create an additional toolbar to suit your own requirements.

You can find a description of how to create and edit a toolbar in Toolbars on page 447.

Menu Commands

In principle, all menu commands that are not grayed out can be applied to 3D data. When working in 3D mode in particular, you will find the **Projection** and **Display** commands in the **Window** menu and the **3D Options** dialog box under the **Preferences** command in the **Edit** menu

These menu commands, their settings, and selection options are described in separate topics. Information on the different functions of certain menu commands when used in 3D mode can be found in the topics that deal with those commands.

Tools from the Toolbox

As you can see, most of the tools are grayed out and unavailable in 3D mode. The arrow cursor and the three transformation tools are available for editing 3D data.

You can find descriptions on how these tools are used in 3D mode in the topics devoted to the individual tools, located after the descriptions of their usage outside 3D mode.

21
3D Tools

Applies to Arbortext IsoDraw CADprocess only.

This section describes each tool on the standard **3D Tools** toolbar which is only available in 3D mode. You use these tools to edit 3D data in Arbortext IsoDraw CADprocess.

Each tool on the **3D Tools** toolbar corresponds to a 3D data editing menu command. These menu commands are also only available in 3D mode.

Note

*You can add and remove 3D data editing tools from the **3D Tools** toolbar using **Windows ▸ Toolbars**. See* *Toolbars on page 447* *for instructions.*

Centering Tool

Applies to Arbortext IsoDraw CADprocess only.

The information contained in the original file also defines the origin of the coordinate system. Clicking the **Centering** tool allows you to align all the assemblies of the drawing so that the coordinate origin is at the center point of all assemblies.

You can also use this centering function for selecting individual assemblies. Select the required assemblies using the **Object** window or the arrow cursor.

Note

*The **Centering** tool takes into account all assemblies in a drawing. However, it is sometimes the case that the drawing from the CAD program is too large in a scale of 1:1 or that the distance to the coordinate cross is too large. In this case, some of the drawing may disappear off the screen. You can bring the entire drawing into view by using the display tool. If individual elements of the drawing that are not needed are far outside the drawing area, delete them. Centering brings the entire drawing closer to the coordinate system. You can also scale the drawing in the starting dialog box for the import process. However, this can affect the quality of the 2D illustration after projection.*

Explosion Tool

Applies to Arbortext IsoDraw CADprocess only.

The Explosion tool gives you the means to automatically explode the components of a larger assembly unit along a specific axis. Individual parts are spatially separated. Explosion always goes as far as necessary till the parts no longer overlap. If all the components of an assembly unit lie on a single axis (e.g. a shaft with bearing, flange and fastening units), you can select the tool for the entire drawing directly. In the case of assembly units where components are added in a different direction to the major axis (e.g. gear housing with angled threaded plug), you must first select all components in one direction (axis).

If components (e.g. a threaded plug) lie outside the major axes, you can create a suitable axis before exploding using the 3D axis selector. Provided no coordinate system axis is selected afterwards, the selected parts will be exploded on the free axis.

You have used the **Object** window or the arrow cursor to select all assemblies on a given axis and/or all assemblies (drawing with one axis). Click the **Explosion** tool.

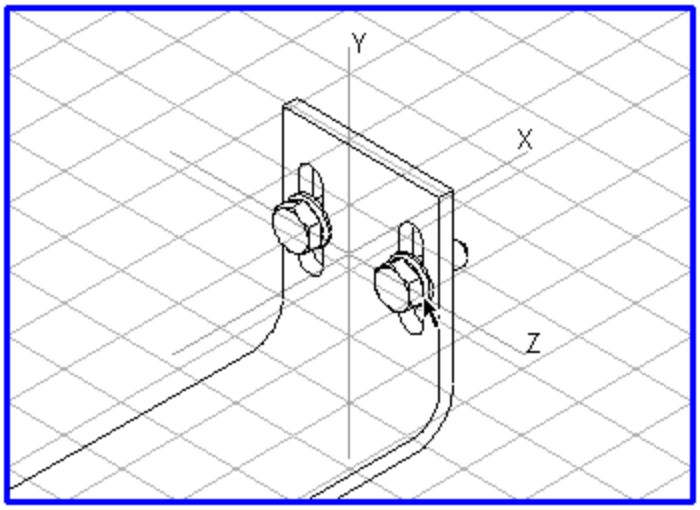

The following dialog box appears:

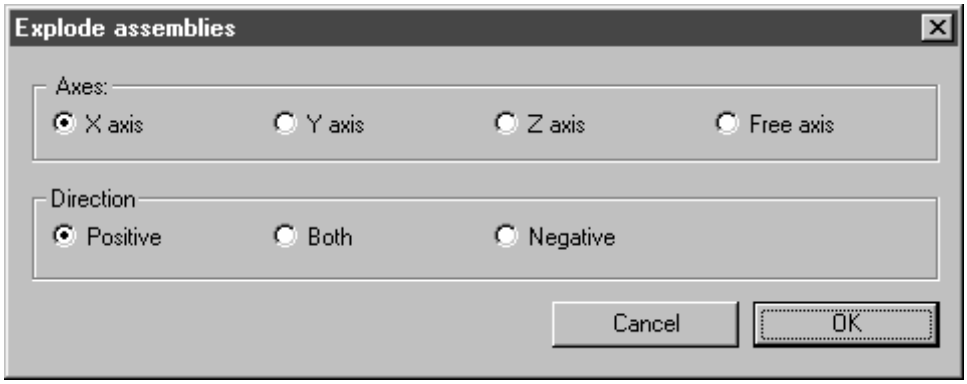

Axes

Here you can select the axis along which you wish to explode the assemblies. The choice of axis must therefore agree with the axis in the drawing on which the components are located. If there is no free axis, the **Free axis** option remains grayed out and without function.

Direction

You can use this setting to specify the direction on the free axis that is to be used to pull the assemblies apart. If you select individual assemblies, you can explode them straightaway in the direction in which they were assembled.

If you select **Positive**, the assemblies will be exploded in the direction with axis designation (**X**, **Y**, **Z**). If **Negative** is set, they will be exploded in the opposite direction. If you select **Both**, the parts will be pulled apart in both axial directions. The direction in this case depends on the extent and the orientation of the assemblies.

If the explosion tool is used on a free axis, the arrow on the blue axis defines the positive direction.

You can also move each assembly along the axis subsequently.

Once you have completed your settings, click **OK**. The selected assemblies are then exploded in accordance with this setting. Clicking **Cancel** closes the dialog box without changing the orientation of the assemblies.

In the example, the X axis and direction `Negative` have been selected.

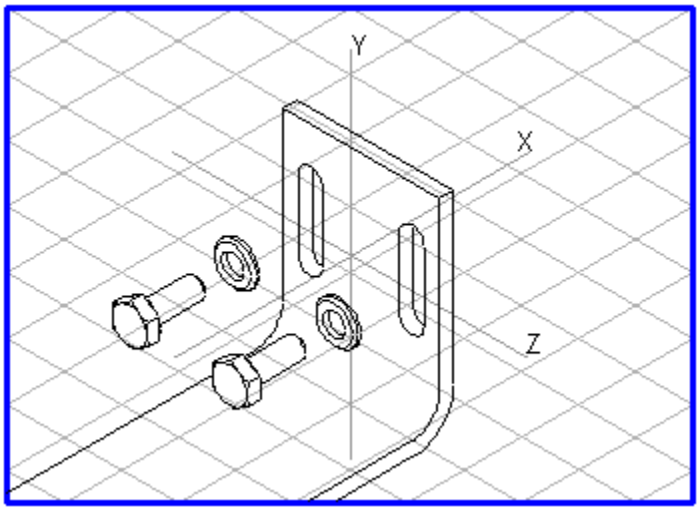

The following examples show the sequence of operations:

The Bracket assembly unit in assembled form, the bracket with fastenings exploded in the X axis' negative direction, and the bracket with fastenings and cover exploded in the Y axis' positive direction.

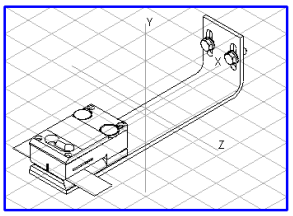

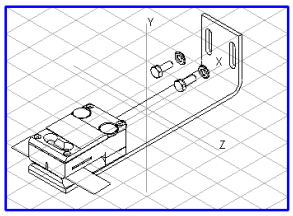

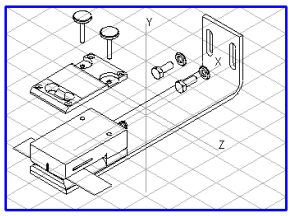

3D Perspective Distance Tool

Applies to Arbortext IsoDraw CADprocess only.

Choosing **Window** ▸ **Perspective** ▸ **Projection** in 3D mode activates the **3D Perspective Distance** tool, which would otherwise be grayed out. Clicking on the symbol button opens the following dialog box:

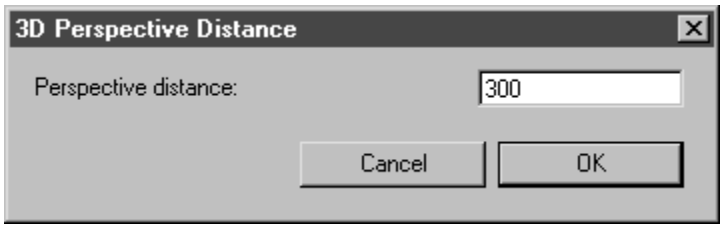

Enter the required **Perspective distance**. Click **OK** to confirm your entry or **Cancel** to close the dialog box without making any changes. When the dialog box is closed the elements are depicted in the new perspective.

Note

You can enter values ranging from 0.1 to 10000. Note that the value for perspective distance can also be selected so that the observer is located inside the object. This can result in unwanted projections of elements located behind the observer.

Display Tool

Applies to Arbortext IsoDraw CADprocess only.

Imported drawings are frequently very large. To obtain an overview of all the assemblies, the entire drawing needs to be brought into the field of vision. Clicking the **Display** tool displays the entire drawing on the screen.

If you first align the drawing to the coordinate system using the **Centering** tool, you will easily be able to obtain an overview while work is ongoing (e.g. when selecting an assembly from the **Object** window).

3D Move Tool

Applies to Arbortext IsoDraw CADprocess only.

The **3D Move** tool allows you to rotate the drawing. After selecting the **3D Move** tool click on the drawing area. If you move your mouse while holding down the mouse button, you can rotate the drawing around all the axes of the coordinate system simultaneously. Imagine your hand is lying on a ball that you are rolling over a table. If you move the mouse in the same way, the elements will be rotated in the same way as the ball. You do not have to select a specific axis if you want to rotate freely in space in this way.

You can freely rotate a selection of assemblies in the same way. You can select the required assemblies using the object window or the arrow cursor. Once you have activated the **3D Move** tool, you can switch to the arrow cursor temporarily by pressing the CTRL key.

In the case of individual assemblies, free rotation is around the center of the selection.

3D Select Axis Tools

Applies to Arbortext IsoDraw CADprocess only.

You can use the **3D Select axis** buttons on the **3D Tools** toolbar to create “free” axes in 3D mode in addition to the X, Y and Z axes. Free axes are independent of the coordinate system.

Note

You must have Arbortext IsoDraw CADprocess 7.2 or later to create and save multiple free axes.

Free axes can be created tangent to 3D element contours, relative to paths, or through the coordinate system origin. The arrowhead on the free axis indicates the positive direction.

You can only select one free axis at a time. The selected free axis is red by default. All other free axes are blue.

Note

*The **1. color** setting on the **Grid** preferences panel sets the selected free axis color. (See Grid on page 110.)*

You can transform parts relative to the selected free axis, the same as you can relative to the selected X, Y, or Z axis. For example, you can select a free axis and then:

- Rotate a part around it using the **Rotation** tool. (See Rotation on page 630.)
- Reflect a part across it using the **Reflection** tool. (See Reflection on page 635.)
- Move a part along it using the **Arrow cursor** tool. (See Selecting on page 473.)
- Explode assemblies along it using the **Explosion** tool. (See Explosion Tool on page 678.)

Free axis transformations such as these are useful if, for example, you want to prepare 3D objects for a spare parts catalog. If objects are outside the coordinate system axes, you can create a free axis and then move or explode the parts on this axis.

To Create Free Axes

Use the **3D Select axis** tool to create a free axis, or multiple free axes. Each free axis you create is tangent to a 3D element contour at a single point.

1. Click the **3D Select axis** button on the **3D Tools** toolbar.
2. When the pointer becomes a , click a contour on an element in the drawing. A red free axis appears tangent to the contour at the point on the contour where you clicked.
3. To create another free axis, click another point on an element contour. A new free axis appears. The new (red) free axis is selected; the other (blue) free axes are not.

The figure below shows free axes created along the outer contour of a part. The selected free axis is red; the other free axes are blue.

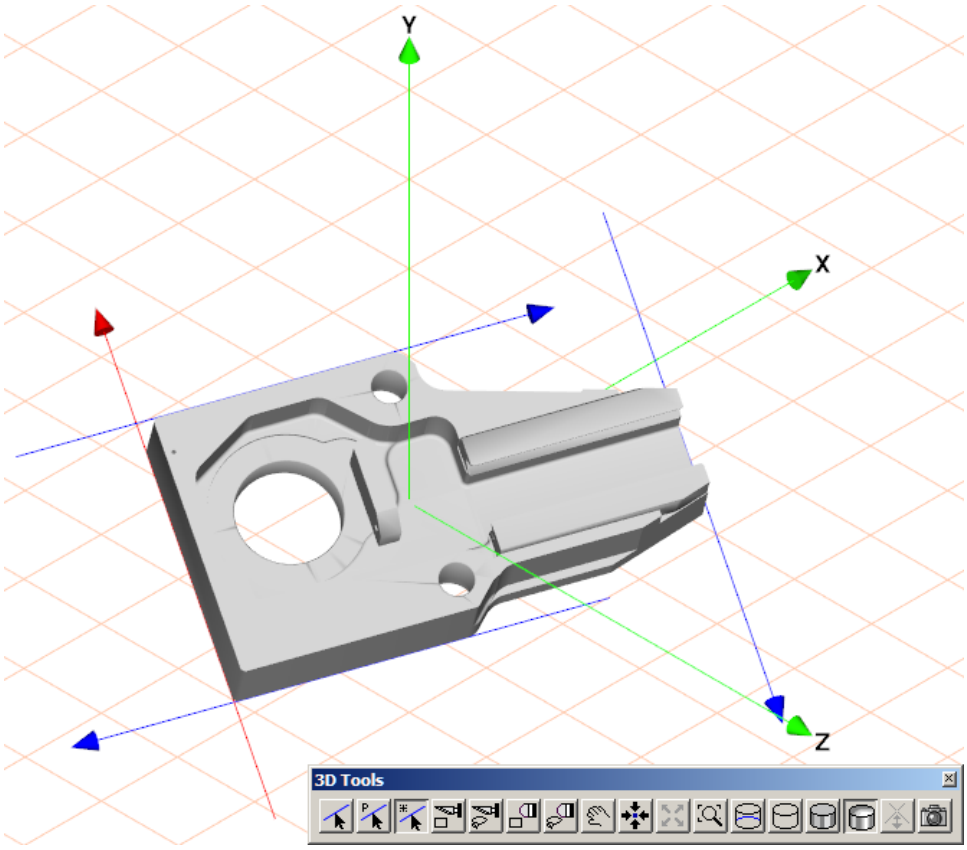

To Create Free Axes based on Paths

Use the **3D Select axis (based on a path)** tool to create a free axis, or multiple free axes. Each free axis you create is perpendicular to a closed path (contour) area on an element.

1. Click the **3D Select axis (based on a path)** button on the **3D Tools** toolbar.
2. When the pointer becomes a , click an element in the drawing.
3. After you click, Arbortext IsoDraw CADprocess traces the contour of the area and tries to find a valid path.
4. If no valid path is found, the **No valid path found!** message appears. Try clicking again at a different location.
5. When a valid path is found, a red free axis appears perpendicular to the area of the path.

6. To create another free axis, click another point on an element.
7. If a new path is found, a new free axis appears perpendicular to the path. The new (red) free axis is selected; the other (blue) free axes are not.

The figure below shows free axes based on paths around holes in the part. The axes are perpendicular the holes. The selected free axis is red; the other free axes are blue

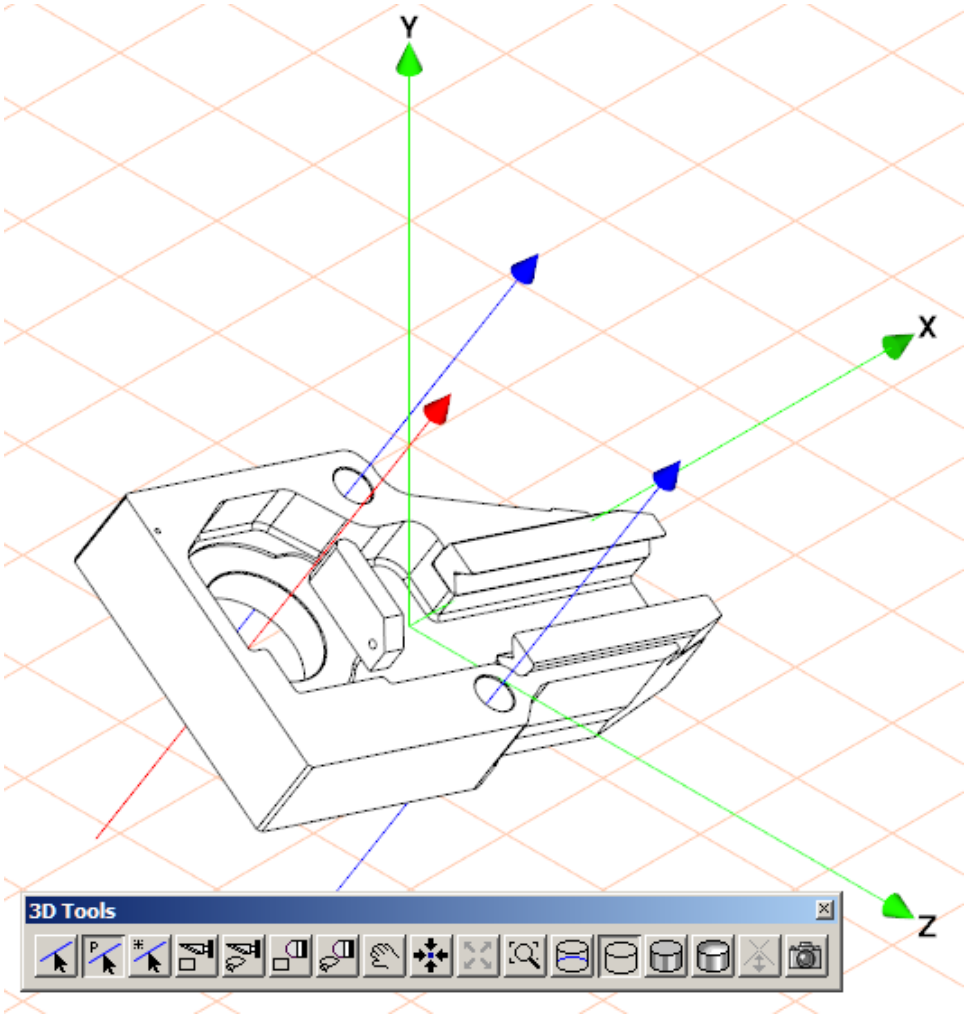

To Create Free Axes through the Origin

Use the **3D Select axis (through the origin)** tool to create a free axis, or multiple free axes. Each free axis you create intersects the origin and is oriented tangent to a

3D element contour at a single point. The arrowhead on the free axis indicates the positive direction.

1. Click the **3D Select axis (through the origin)** button on the **3D Tools** toolbar.
2. When the pointer becomes a , click a contour on an element in the drawing. A red free axis through the origin appears. The axis is oriented tangent to the contour at the point where you clicked.
3. To create another free axis, click another point on an element contour. A new free axis through the origin appears. The new (red) free axis is selected; the other (blue) free axes are not.

The figure below shows free axes through the origin. Each axis is oriented tangent to a contour on the part. The selected free axis is red; the other free axes are blue.

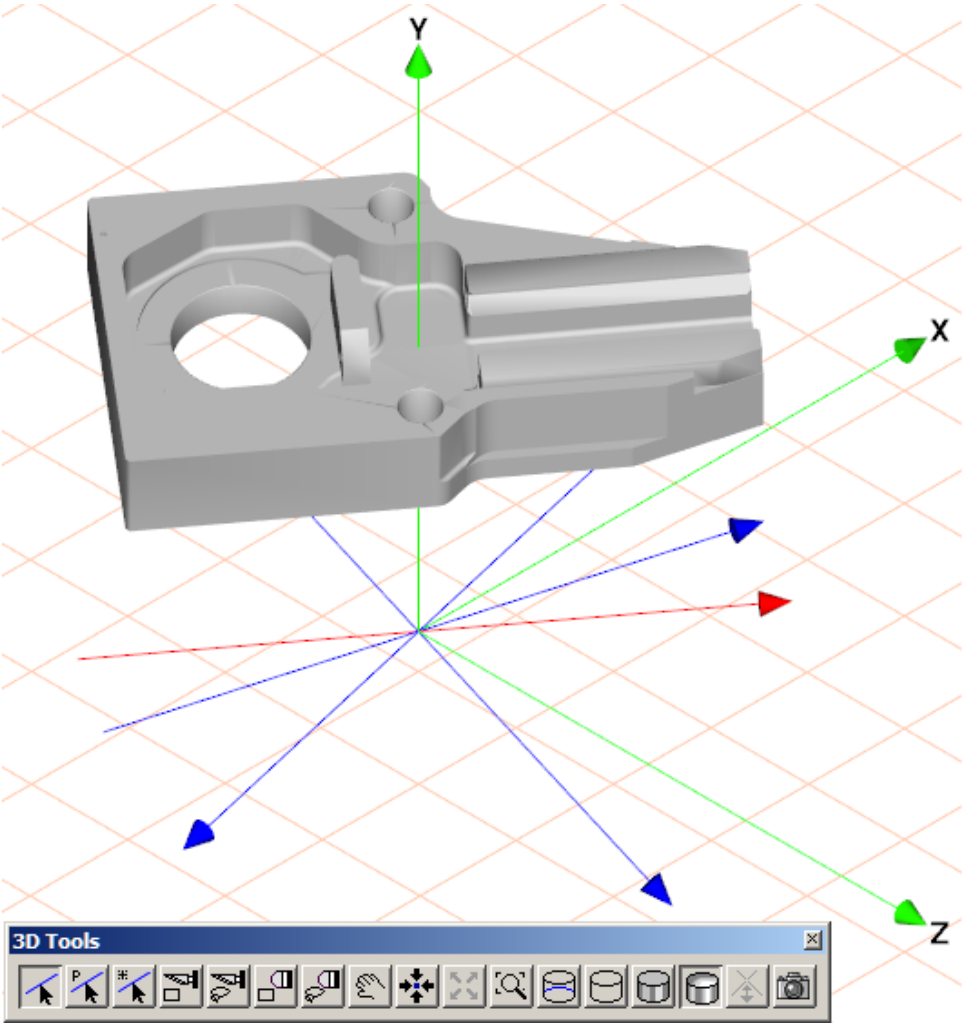

To Save Free Axes

Applies to Arbortext IsoDraw CADprocess 7.2 and later only.

If you create one or more free axes in 3D mode, you can save them in the ISO file.

Note

You cannot save a free axis in a version 7.1 or earlier ISO file.

1. In 3D mode, create one or more free axes.
2. While still in 3D mode, save the ISO file and close it. All free axes you created will be saved in the file.

   #### *Caution*

   Save the ISO file in 3D mode only. When you project a 3D view with free axes into a 2D illustration, all free axes are deleted.

3. Reopen the ISO file you just saved. The file opens in 3D mode and displays the free axes.

To Select, Reverse, or Delete a Free Axis

1. In the Palette Window Toolbox, click the **Arrow cursor** tool.
2. When the pointer becomes a you can select, reverse, or delete free axes using the methods below:

Action	Method
Select a (non-selected, blue) free axis.	Click it. The free axis changes to the selected-state color (red by default).
Reverse the selected (red) free axis direction.	Click it (while it is selected). The arrowhead switches to the opposite end of the axis. Click it again to switch it back to the original direction.
Delete a free axis.	SHIFT-click the free axis you want to delete.
Delete all free axes.	CTRL-SHIFT-click any free axis.
Select, reverse, or delete a free axis that is in front of a 3D graphic.	Press CAPS LOCK first, then use a method above.

3D Align to Axis Tools

Applies to Arbortext IsoDraw CADprocess only.

Use the following 3D mode **Edit** menu **Align** commands or the corresponding 3D align to axis tools on the **3D Tools** toolbar to align a 3D object to:

- A coordinate (X, Y, or Z) axis; for example, to align the edge of an object with the X, Y, or Z axis. (See 3D Align to X, Y, or Z Axis on page 688.)
- A free axis; for example, to align a bolt shaft with the hole in a nut. (See 3D Align to Free Axis on page 690.)

3D Mode Menu Command	Corresponding 3D Tools Toolbar Button
Edit ▸ Align ▸ X axis	**X axis**
Edit ▸ Align ▸ Y axis	**Y axis**
Edit ▸ Align ▸ Z axis	**Z axis**
Edit ▸ Align ▸ Free axis	**Free axis**

3D Align to X, Y, or Z Axis

Applies to Arbortext IsoDraw CADprocess only.

To align a 3D object to the X, Y, or Z axis in 3D mode:

1. Create a free axis or select an existing free axis. (See the topics under 3D Select Axis Tools on page 682 for descriptions of the various ways to create a free axis.)
2. Select one or more 3D objects.
3. Click a free axis to make it active (red). You will align the active free axis for 3D object(s) to the X, Y, or Z axis.
4. On the **Edit** menu, click **Align** and then click the coordinate axis you want to align to: **X axis**, **Y axis**, or **Z axis**, or, click the 3D align X, Y, or Z axis button on the **3D Tools** toolbar:

   X axis

   Y axis

Z axis

5. The selected 3D objects translate and/or rotate to align to the specified coordinate axis. Only the 3D objects move. The active (red) axis does not.

Example

To align an edge on a rectangular block parallel to the X axis:

1. Create a free axis on the block edge.
   a. Click the **3D Select axis** button on the **3D Tools** toolbar.
   b. When the pointer becomes a , click the edge to create a free axis on it.
2. Select the block.

   (Optional) Select other 3D objects if you want them to move with the block during edge alignment.
3. Click the 3D align **X axis** button on the **3D Tools** toolbar.
   - The block translates and/or rotates to align the free axis edge parallel to the X axis.
   - Other selected 3D objects translate and/or rotate with the block, keeping their same positions relative to the block.

Example

To align a pulley wheel so its rotation axis is parallel to the Z axis:

1. Create a free axis along the pulley wheel's rotation axis:
   a. Click the **3D Select axis (based on a path)** button on the **3D Tools** toolbar.
   b. When the pointer becomes a , click on the circular path that defines the pulley wheel's outer edge. A free axis is created perpendicular to the wheel face along the central rotation axis. The free axis is active (red).
2. Select the pulley wheel.

   (Optional) Select other 3D objects if you want them to move with the pulley wheel during alignment.
3. Click the 3D align **Z axis** button on the **3D Tools** toolbar.

- The pulley wheel translates and/or rotates such that the free axis created along the rotation axis is parallel to the Z axis.
- Other selected 3D objects translate and/or rotate with the pulley wheel, keeping their same positions relative to the pulley wheel.

3D Align to Free Axis

Applies to Arbortext IsoDraw CADprocess only.

To align a 3D object to a free axis in 3D mode:

1. Create free axes. You will need at least two free axes to perform this alignment; one active (red) axis and one inactive (blue) axis. (See the topics under 3D Select Axis Tools on page 682 for descriptions of the various ways to create a free axis.)
2. Select one or more 3D objects.
3. Click a free axis to make it active (red). You will align the red free axis for a 3D object to blue free axis.
4. On the **Edit** menu, click **Align** and then click **Free axis**, or, click the 3D align **Free axis** button on the **3D Tools** toolbar.
5. When the pointer becomes a , click an inactive (blue) free axis. This is the free axis the 3D object(s) will be aligned to.
6. The selected 3D objects translate and/or rotate to align to the specified inactive (blue) free axis. Only the 3D objects move. The active (red) axis does not.

Example

To align two 3D objects, such as a bolt to a nut:

1. Create one free axis along the center of the bolt shaft. Create another free axis through the center of the hole in the nut. To create these two axes:
   a. Click the **3D Select axis (based on a path)** tool on the **3D Tools** toolbar.
   b. When the pointer becomes a :
      - Click the circular edge of the hole in the nut to create a free axis through the center of the hole.
      - Click the circular edge on the end of the bolt shaft to create a free axis along the center of the shaft.

c. The free axis along the bolt shaft should be active (red). If not, select the bolt's inactive (blue) axis to make it active (red). (To select the free axis, CTRL-click with the pointer, or click the **Arrow cursor** tool, and then click the free axis with the pointer.) Making the bolt's free axis active enables the bolt to translate and/or rotate during alignment while the nut (with the inactive free axis) remains stationary.

2. Select the bolt object (only). (Do not select the nut object or it will move along with the bolt during alignment.)
3. Click the 3D align **Free axis** button on the **3D Tools** toolbar.
4. When the pointer becomes a , click the inactive (blue) free axis through the hole in the nut. This specifies the free axis that the bolt shaft free axis will align to.
   - The bolt translates and/or rotates to align its shaft coaxial with the free axis through the nut hole.
   - Other selected 3D objects move with the bolt, keeping their same positions relative to the bolt.

3D Cutting Tools

Applies to Arbortext IsoDraw CADprocess only.

The **3D cutting** tools can be used to cut freely selected areas from selected objects or surfaces. They can be used to make areas (objects or surfaces) that lie behind other areas visible. You can use the tools several times in succession. This can provide a deeper view into a complex assembly.

Two cutting tools are available – one with the selection rectangle symbol and the other with the lasso symbol.

Select the object or surface from which you want to cut a piece. Once you have activated a **3D cutting** tool, you can switch to the arrow cursor temporarily by pressing the CTRL key.

If you do not hit any selected objects, all objects/surfaces will be selected. The whole area of the drawing that has been selected with one of the cutting tools will then be cut.

3D Cutting (with Selection Rectangle) Tool

When you use the **3D cutting (with selection rectangle)** tool, you drag a rectangle. All selected areas of objects or surfaces inside the selection rectangle are cut away. The resulting transparent section is rectangular.

As soon as you release the mouse button after dragging the selection rectangle, all elements of the selected objects or surfaces within this area are cut.

If you want to cancel the result after the cut has been performed, choose **Edit ▸ Undo**. The objects or areas are then shown in their original form again.

3D Cutting (with Lasso) Tool

If you select the **3D cutting (with lasso)** tool instead, the cursor becomes a lasso. In principle, the lasso functions exactly like the selection rectangle. With the lasso, however, you can freely define the boundary within which the objects or surfaces are to be cut. The lasso is particularly useful when a broken-out section is to be shown. As soon as you release the mouse button, all elements of the selected objects or surfaces within the lassoed area are cut.

In the following example, you can see an excerpt from a drawing where the **3D cutting (with lasso)** has not been used (left) and one where it has been used (right).

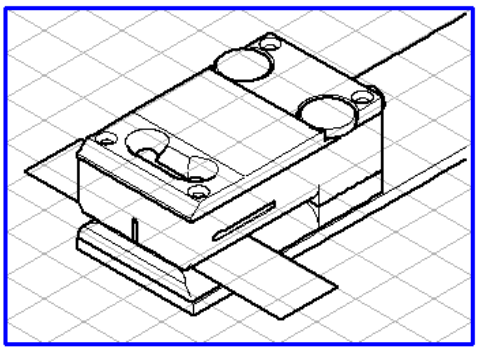

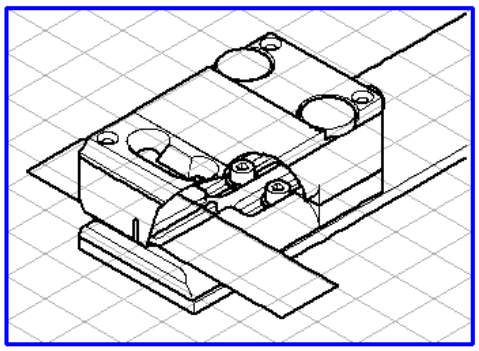

If you want to cancel the result after the cut has been performed, choose **Edit ▸ Undo**. The objects or areas are then shown in their original form again.

3D Transparency Tools

Applies to Arbortext IsoDraw CADprocess only.

The **3D Transparency** tools can be used to make freely selectable areas of selected objects or surfaces transparent. They can be used to make areas (objects or surfaces) that lie behind other areas visible too. For example, you can use this tool to represent covered parts or parts that are functionally important.

Two transparency tools are available – one with the selection rectangle symbol and the other with the lasso symbol.

Select the object(s)/surface(s) to be made transparent. Once you have activated a **3D transparency** tool, you can switch to the arrow cursor temporarily by pressing the CTRL key.

If you do not hit any selected objects, all objects/surfaces will be selected. The whole area of the drawing that has been selected with one of the transparency tools will then be made transparent. In principle, this produces a wire frame of the selected area of the drawing.

3D Transparency (with Selection Rectangle) Tool

When you use the **3D transparency (with selection rectangle)** tool, you drag a rectangle. All selected areas of objects or surfaces inside the selection rectangle are made transparent. The resulting transparent section is rectangular. As soon as you release the mouse button after dragging the selection rectangle, all elements that lie behind the selected objects or surfaces within this area become visible.

3D Transparency (with Lasso) Tool

If you select the **3D transparency (with lasso)** tool instead, the cursor becomes a lasso. In principle, the lasso functions exactly like the selection rectangle. With the lasso however, you can freely define the boundary within which the objects or surfaces are to be made transparent. The lasso is particularly useful when a broken-out section is to be shown. As soon as you release the mouse button, all elements that lie behind the selected objects or surfaces within the broken-out area become visible.

In the following example, you can see an excerpt from a drawing where the **3D transparency (with lasso)** has not been used (left) and one where it has been used (right) after projection into a 2D illustration. As you can see in the figure on the right, the contour lines of the transparent elements are always shaded.

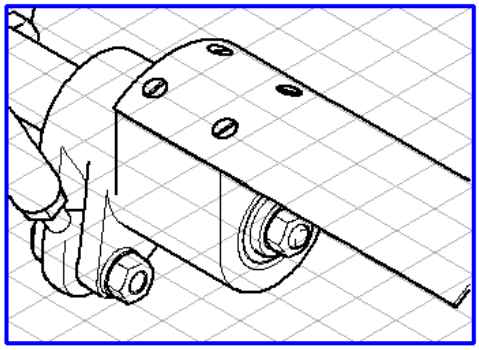

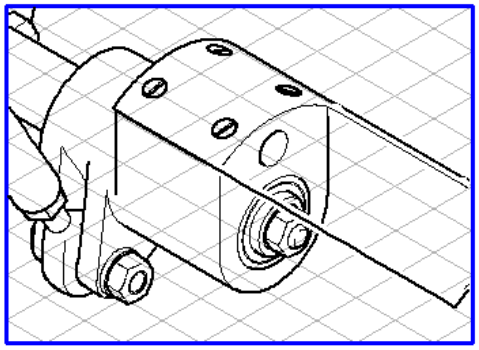

If you want to cancel the result after the transparency has been performed, select **Element ▸ Remove 3D transparency**.

The objects or areas are then shown in their original form again.

Display Options

Applies to Arbortext IsoDraw CADprocess only.

You can use the four display option tools on the **3D Tools** toolbar,  , to select the various display modes instead of using **Window ▸ Display**. The symbols stand for **Wireframe**, **HLR**, **Rendering**, and **Smooth rendering** respectively. Display on page 457 describes how these display modes differ.

Convert to 2D Illustration

Applies to Arbortext IsoDraw CADprocess only.

Once you have finished your work in 3D mode, you can copy the entire drawing into a normal two-dimensional Arbortext IsoDraw window. To do this, click the **Convert to 2D illustration**  button. Refer to Projection into an Illustration on page 695 to find out how to proceed next.

22

Projection into an Illustration

Applies to Arbortext IsoDraw CADprocess only.

If you have preprocessed the drawing using the tools and commands described, you can copy all the objects (assemblies and elements) into a two-dimensional drawing. The drawing then appears in a normal two-dimensional Arbortext IsoDraw window.

Do this by clicking the **Convert to 2D illustration** button in the toolbar. The drawing then appears in a 2D Arbortext IsoDraw window according to the set preferences and with the same name as the edited 3D file. If the edited 3D file is to be retained, you must hold down the ALT key when clicking the camera button. The projected 2D file then appears in a window named **Untitled**.

If you have selected the **Show options dialog before converting to 2D** option in the **3D Options** preferences dialog, the **3D Projection** starting dialog box appears.

3D Projection

Applies to Arbortext IsoDraw CADprocess only.

This dialog gives you various options for selecting how the current drawing is to be displayed in the normal Arbortext IsoDraw window.

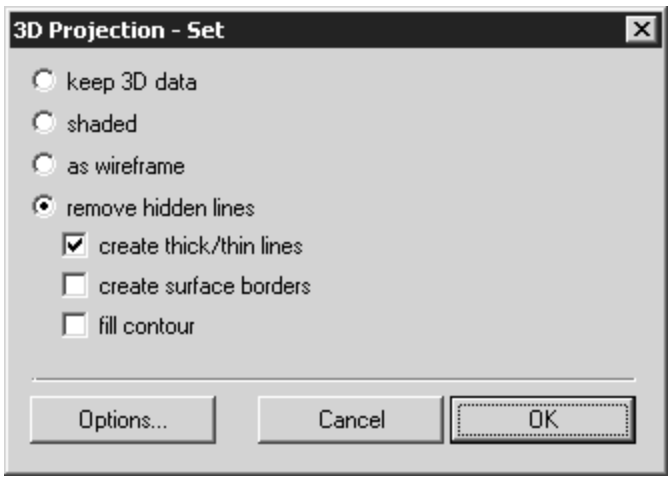

Clicking **Options** results in another dialog box being displayed, where you can select further optimization settings.

Keep 3D Data

If you select **keep 3D data**, the drawing is depicted in 2D mode using the display mode that was last selected in 3D mode. You can only edit the drawing to a limited extent. It is not possible to create animations in 2D mode. As this type of projection preserves all 3D information, you can change to 3D mode at any time by choosing **Element ▸ 3D Transformation**. You can then edit the drawing in 3D mode.

Note

*If animations have already been created for objects in 3D mode prior to projection, only the **keep 3D data** projection type can be selected in the **3D Projection** dialog box.*

Shaded

If you select **shaded**, the drawing appears in the Arbortext IsoDraw window as a raster image according to the display type selected in 3D mode. This type of projection is primarily intended for use with the **shaded** and **Smooth rendering** display types in 3D mode. The drawing is converted as a raster image containing all the colors specified in 3D mode. After conversion, the drawing can be changed using the image editing tools.

As Wireframe

If you select **as wireframe**, all the elements in the 3D file will be transferred to the 2D illustration. The pens with their attributes from the 3D file are retained. The settings for optimizing the data in the **Options** dialog box cannot be selected.

The result of your 3D projection therefore corresponds to the original drawing from the CAD system.

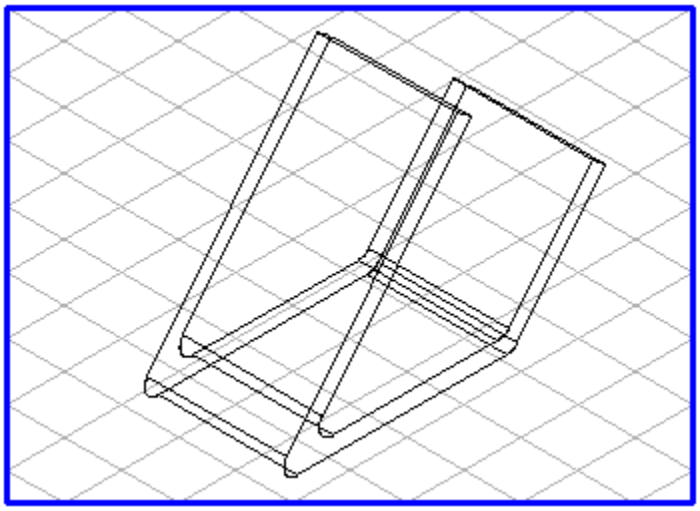

Remove Hidden Lines

If you select **remove hidden lines**, the illustration will be displayed in your chosen perspective and orientation without hidden lines. This means that all elements are removed, which are invisible to the observer.

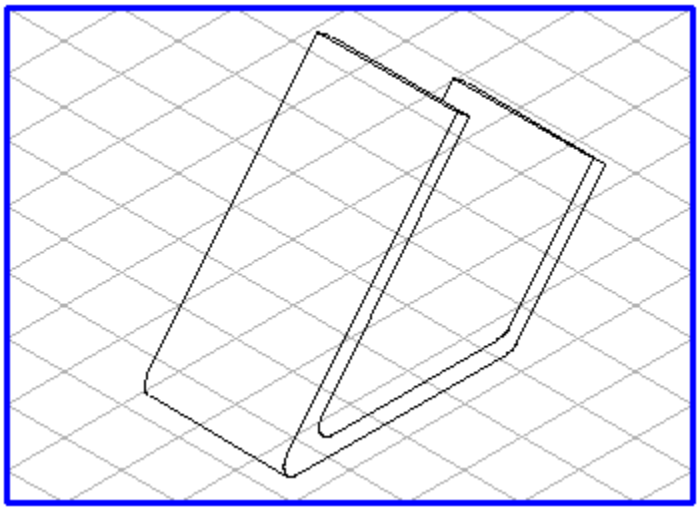

Create Thick/Thin Lines

If you click the **create thick/thin lines** box, the illustration will show the distribution of thick and thin lines for outer and inner edges, which is typical for technical illustration. The pens for thick and thin lines can be assigned in the **Options** dialog box.

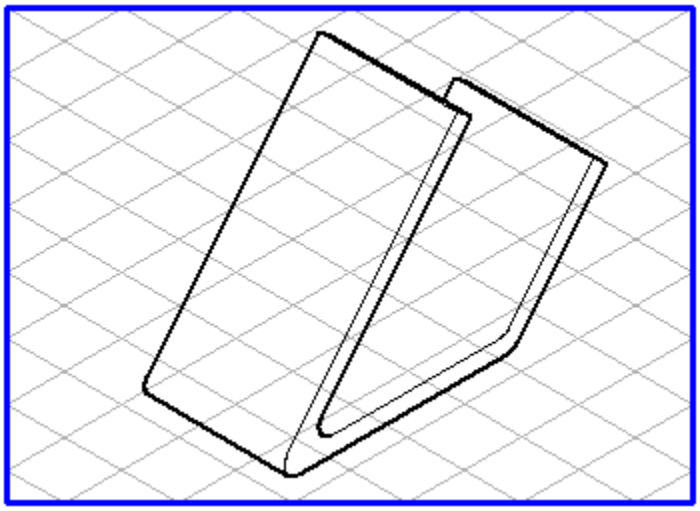

Selecting **remove hidden lines** with **create thick/thin lines** enabled allows you to create the key attributes of a technical illustration.

Create Surface Borders

When importing 3D data, a large number of individual surface elements are loaded, particularly with the IGES format. If a file appears in 3D mode, you can easily recognize the surfaces with their delimiting lines as created in the CAD file.

The **delimiting lines** are recognized via hidden line removal and are converted as inner or outer edges into the 2D illustration. Situations can occur where it is not clear whether inner edges are to be converted from delimiting lines. This can be the case, for example, with difficult free-form surfaces or with two surfaces that meet at an obtuse angle.

For this reason, inner edges may be missing from the illustration.

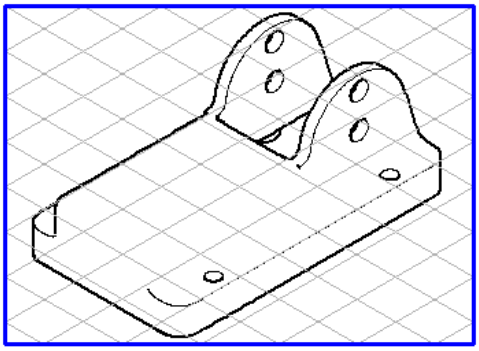

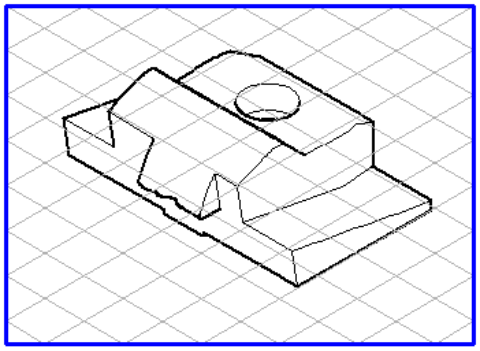

If you select the **create surface borders** box, the missing inner edges are also converted from the delimiting lines. These lines are assigned a pen of their own in the 2D illustration. All lines that have been converted using the **Create surface borders** function can be recognized easily since they are drawn with the **Border** pen. With the exception of screen color, the **Border** pen has the same attributes as the **Thin** pen.

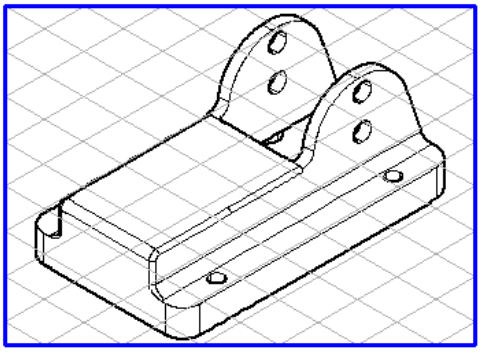

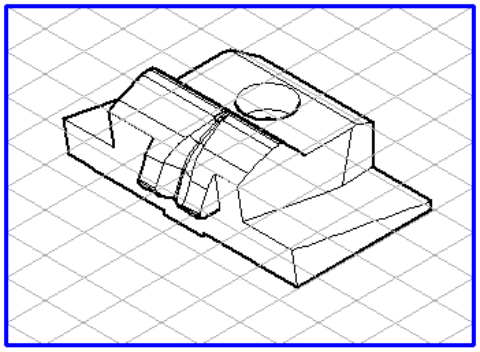

When enlarged, you can clearly see the lines created with the **Create surface borders** function. All lines that appear over and above those when converting without the **Create surface borders** function are surface borders.

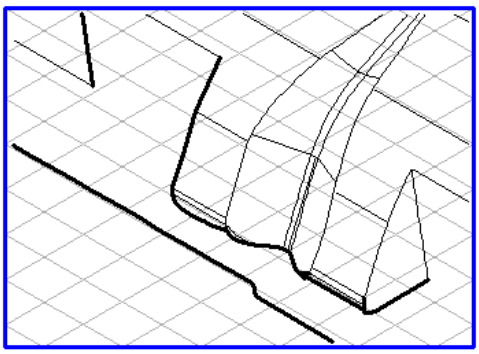

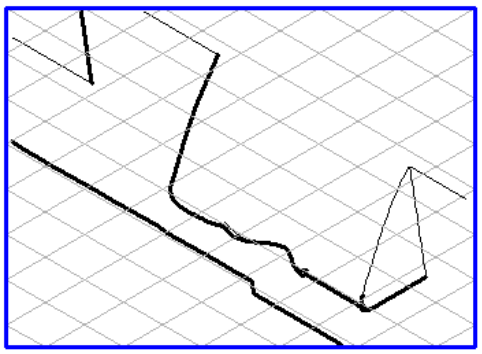

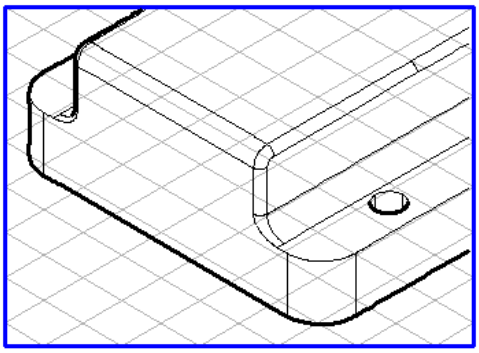

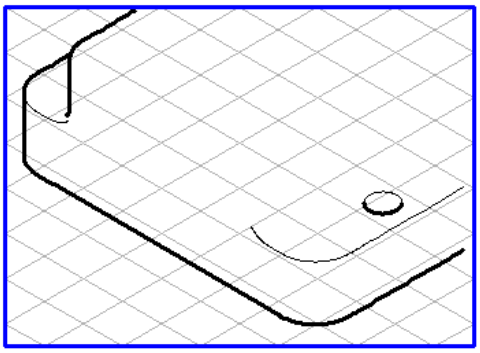

If you want to delete individual surface borders, you are best working in drawing mode. As the **Border** pen has a different screen color than the **Thin** pen the lines are easy to see in drawing mode. Change the surface borders that you wish to keep in the illustration to the required pen. You can delete the remaining borders like this: Choose **Edit** ▸ **Select**, then select all the elements that use the **Border** pen. Confirm the selection. You can then delete the elements.

When you import files in which all the individual surfaces have been defined as a single surface, you will not find any additional lines in the 2D illustration using the **Create surface borders** function. In these cases, you can use the detailed settings **Smooth surfaces** and **Accuracy**.

If you make the appropriate setting, additional inner edges are set by Arbortext IsoDraw CADprocess. These inner edges are not surface borders.

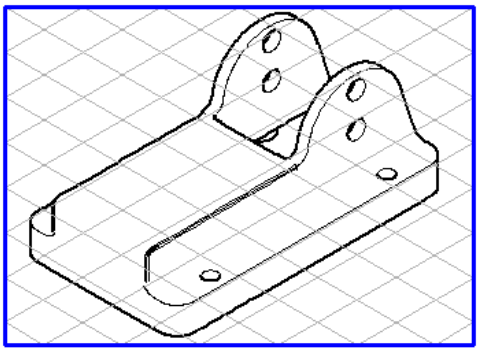

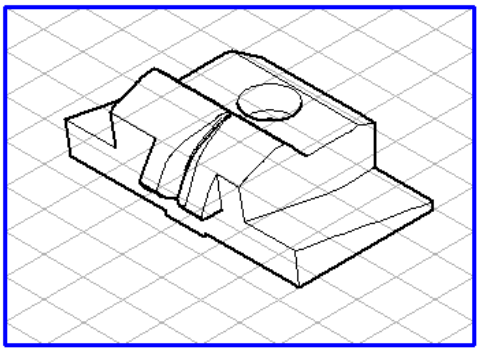

3D Projection Options – Remove Hidden Lines on page 706and 3D Projection Options – Shaded on page 705contain important information of the detailed settings.

Clicking **Cancel** allows you to exit the **3D Projection** dialog box. Clicking **OK** copies the 3D data into a normal Arbortext IsoDraw window in the form of a 2D illustration. All the 3D elements are converted to 2D elements in the background using the selected settings.

While the data is copied to the Arbortext IsoDraw window, the **Optimize** window appears on the screen and shows you how the conversion is progressing. The Arbortext IsoDraw window containing the illustration then appears as file **Untitled**. It is behind the window containing the file in 3D mode. Select **File** ▸ **Save** or **Save as** and save the illustration as an Arbortext IsoDraw file. The file is still open in 3D mode. This allows you to create further views of the drawing in 3D mode. Each time you click **OK** in the **3D projection** window, a new file window will be created containing a snapshot of the required situation.

Note

*If you only want to create a 2D drawing, hold down the ALT key while clicking the camera button in the toolbar. The window containing the file in 3D mode is converted to a normal 2D window when you click **OK** in the **3D Projection** dialog box and appears with the name of the initial file. This option is particularly useful if you have little memory available.*

Fill Contour

Select the **fill contour** check box under **remove hidden lines** to create a closed, filled Bézier path around the outer contour of the 3D set. To see the filled contour path in 2D mode after 3D projection, turn on **Preview**. (From the **Window** menu, point to **Preview** and then click **Preview**.)

The 3D set contour path is filled with a single color (white by default) and its outline is invisible. (The outline **Pen** attribute is set to **No pen**.)

To change the contour fill color for the 3D set you are projecting with **remove hidden lines** selected:

1. Verify that the **fill contour** check box under **remove hidden lines** is selected.

   ### *Note*

   *If the **fill contour** check box is cleared, you will not be able to change the color.*

2. Click the **Options** button.
3. In the **Options - Set** dialog box, select a color under **Fill contour with color** and then click **OK**. (See the color selection instructions under **Fill contour with color** in 3D Projection Options – Remove Hidden Lines on page 706.)

You can also change the 3D set contour fill color, and other 3D projection options, in the **3D Options** preferences panel. Like other **3D Options** preference settings for 3D projections, the scope of this contour fill color setting (specifically, which 3D set, or 3D sets, it applies to) depends on the state Arbortext IsoDraw CADprocess is in when you change the preference setting. (See Setting Contour Fill Color as a 3D Options Preference for 3D Projections on page 703.)

Example: 3D Set Contours with Different Colors

The example **remove hidden lines** illustration below has 3D set contours that are filled with different colors. This section describes how it was created.

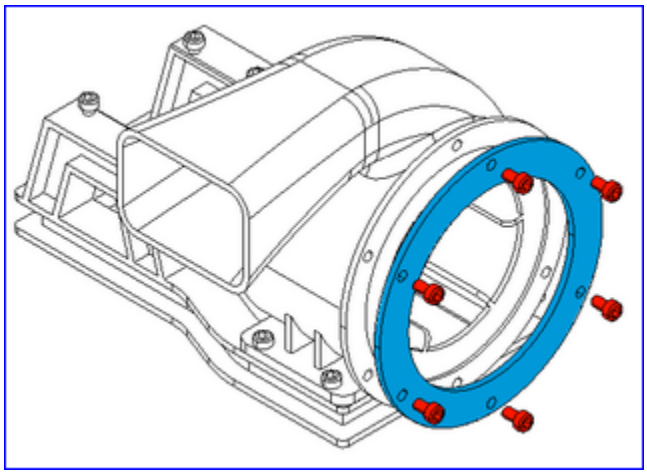

Three 3D sets were used to create this illustration: One for the blower assembly, one for the flange (blue), and one for the six flange bolts (red).

The blower assembly 3D set was projected first without a filled contour. Next, the flange 3D set was projected with a blue-filled contour. Last, the 3D set containing the six bolts was projected with a red-filled contour.

The detailed steps used to create this example illustration are listed below for reference. Substitute your assemblies and parts for the blower assembly, flange, and bolts in these steps to create similar illustrations with color-filled 3D set contours.

1. **Open** (or **Place**) the 3D CAD file for the assembly in Arbortext IsoDraw CADprocess.
2. Prepare the view for 3D projection. In this example:
   a. On the **3D Tools** toolbar, click the **Isometric view top** button.
   b. Right-click the flange and click **Move**. Move the flange +10 mm in the Z-axis direction.
   c. Select the flange bolts.
   d. Right-click one of the selected bolts and click **Move**. Move the bolts +20 mm in the Z-axis direction.
3. On the **3D Tools** toolbar, click the **Convert to 2D illustration** button.
4. In the **3D Projection - Set** dialog box, click **remove hidden lines** and clear the **fill contour** check box.

5. Click **OK** to perform the 3D projection. In 2D mode, the assembly is shown with hidden lines removed and no filled contours.
6. Next, **Place** the flange and project it into 2D with a blue-filled contour:
   a. **Place** the 3D CAD file and prepare the view as described in Steps 1 and 2 above.
   b. Delete all the objects in 3D mode except the flange object.
   c. Click the **Convert to 2D illustration** button in the **3D Tools** toolbar.
   d. In the **3D Projection - Set** dialog box, click **remove hidden lines** and select the **fill contour** check box.
   e. Click the **Options** button.
   f. In the **Options - Set** dialog box, select a color for the contour fill (blue in this example) and then click **OK**. (See instructions under **Fill contour with color** in 3D Projection Options – Remove Hidden Lines on page 706.)
   g. Click **OK** to perform the 3D projection. In 2D mode, the blue flange is displayed in front of the assembly.
7. To finish, **Place** the flange bolts and project them into 2D with their contours filled with red:
   a. Repeats Steps 6(a.) through 6(g.) with these exceptions:
      - In Step 6(b.), delete all the objects except the flange bolt objects.
      - In Step 6(f.), select red for the contour fill color.
   b. In the **3D Projection - Set** dialog box, click **OK** to perform the 3D projection. In 2D mode, the red bolts are displayed in front of both the assembly and the blue flange.

Setting Contour Fill Color as a 3D Options Preference for 3D Projections

You can set the contour fill color (…and other 3D projection settings) on the **3D Options** preferences panel. Consider setting this preference for one or all 3D sets in the following cases:

You always use the same contour fill color for:

- Case 1: A particular 3D set you project in multiple illustrations during an Arbortext IsoDraw CADprocess application session.
- Case 2: All 3D sets you project in one illustration.
- Case 3: All 3D sets you project in all illustrations.

To make a contour fill color preference setting (…or any other 3D projection setting) the default in each case above:

- Case 1: Set the preference in 3D mode with the 3D set active. This makes your setting the default whenever you project that particular 3D set during the current Arbortext IsoDraw CADprocess application session. If you exit and then restart the application, the default preference setting no longer applies to that particular 3D set.
- Case 2: Open the illustration file and set the preference in 2D mode. This makes your setting the default for all 3D sets you project in that illustration file. The default setting persists for that illustration file when you close and reopen it, and when you exit and restart the application.
- Case 3: Close all illustration files and then set the preference. This makes your setting the default for all 3D sets you project in all illustration files. The default setting persists for all illustration files when you close and reopen them, and when you exit and restart the application.

To set the contour fill color preference for one or all 3D sets (depending on the case above):

1. Select **Edit** ▸ **Preferences** and then select **3D Options**…
   - Case 1: …in 3D mode with the 3D set active.
   - Case 2: …with the illustration file open in 2D mode.
   - Case 3: …with all illustration files closed.
2. In the **3D Options** preferences panel, click the **3D Options** button to open the **3D Projection** dialog box (or **3D Projection - Set** dialog box for Case 1.)
3. Click **remove hidden lines** and select the **fill contour** check box, and then click the **Options** button.
4. In the **Options** dialog box (or **Options - Set** dialog box for Case 1) under **Fill contour with color**, select the color. (See color selection instructions under **Fill contour with color** in 3D Projection Options – Remove Hidden Lines on page 706.)
5. Click **OK** twice to close the dialog boxes, and then click **OK** to close the **Preferences** dialog box. The fill color preference setting is applied to the 3D set or 3D sets (depending on the case above).

About Editing 3D Set Contour Paths in 2D Mode

In 2D mode, the filled contour path is grouped with the 3D set. Use the **Direct selection arrow cursor** tool to select the contour path for editing while the 3D set is grouped. Or, you can ungroup the 3D set and then edit the path shape or fill color as you would any other filled Bézier path.

Caution

Ungrouping a placed 3D set breaks the link to its source 3D data.

The contour path is a single path around the outer contours of all objects in the 3D set. It is not a compound path, however. So, if the 3D set includes objects with holes (such as the flange in the example above) or multiple, separate objects (such as the bolts in the example above), the path will have connecting lines between distinctly separate parts of the contour. If you make the contour outline visible by applying a different **Pen** attribute, you may have to edit the path to remove these connecting lines.

3D Projection Options – Shaded

Applies to Arbortext IsoDraw CADprocess only.

If you have selected **shaded** for the **3D Projection**, you can select various criteria in the **shaded - Set** dialog box that can be used to save the raster image in Arbortext IsoDraw format. Click **Options** in the **3D Projection - Set** dialog box. The **shaded - Set** dialog box appears as depicted below:

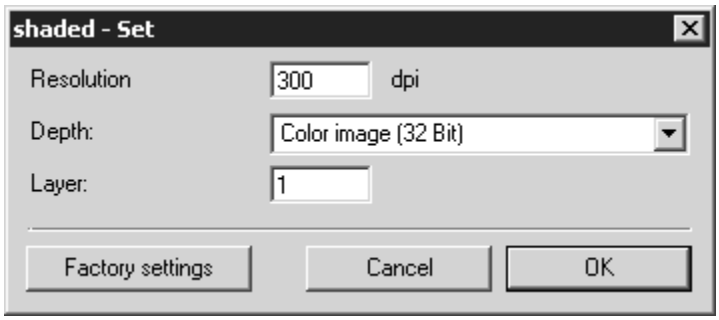

Resolution

Enter the required resolution here. The resolution defines how many pixels are present per inch (dpi = dots per inch). The higher the resolution, the better the quality. This however, also rapidly increases the size of the file at the same time.

Image Depth

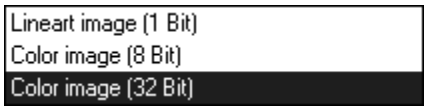

Select here whether the drawing is to be converted into black/white or one of the color modes. The image depth (bit depth) option essentially allows you to control how many different colors the Arbortext IsoDraw file can contain. A line-art drawing can only contain black or white pixels. Color images are limited to 256 colors (8 bits) or any of the settings up to and including 16.7 million colors.

Layer

Specify here whether object information is to be taken over during conversion. The **Layer** that is to be entered here refers to the layers where objects within the file structure are located. Assemblies (objects) can contain subassemblies etc. Every icon in front of an object indicates a layer.

If `1` is entered next to **Layer**, all object information is discarded. All the objects are located on one layer. If you wish to preserve object information including all layers from the 3D-mode file, you must count the layers in the object window and enter the total next to **Layer**.

Note

Once the file has been converted with a sufficient number of layers, each object in the raster image can be individually selected and edited.

3D Projection Options – Remove Hidden Lines

Applies to Arbortext IsoDraw CADprocess only.

In the **3D Projection - Set** dialog box, select **remove hidden lines** if you want to display your current 3D view in 2D mode with hidden lines removed (HLR). Select check boxes below **remove hidden lines** to add optional HLR effects.

With **remove hidden lines** selected, you can view and change HLR illustration settings in the **Options - Set** dialog box:

- **Thin line threshold** – The rendering threshold for inner edges (…determines how many or how few inner edges are displayed).
- **Pens** – The Pen attribute settings used for thick and thin lines.
- **Fill contour with color** – The color used to fill the 3D set contour (white by default).
- **Optimize** – The graphical elements that edge lines and contours are converted into and saved as.
- **Advanced Settings** – Optimize illustration rendering speed.

To open the **Options - Set** dialog box:

1. In the **3D Projection - Set** dialog box and click **remove hidden lines**.
2. (Optional) Select HLR illustration effect check boxes below **remove hidden lines**; **create thick/thin lines**, **create surface borders**, and **fill contour**.
3. Click **Options**. The **Options - Set** dialog appears:

Note

Color picking tools under **Fill contour with color** are only available when the **fill contour** check box is selected.

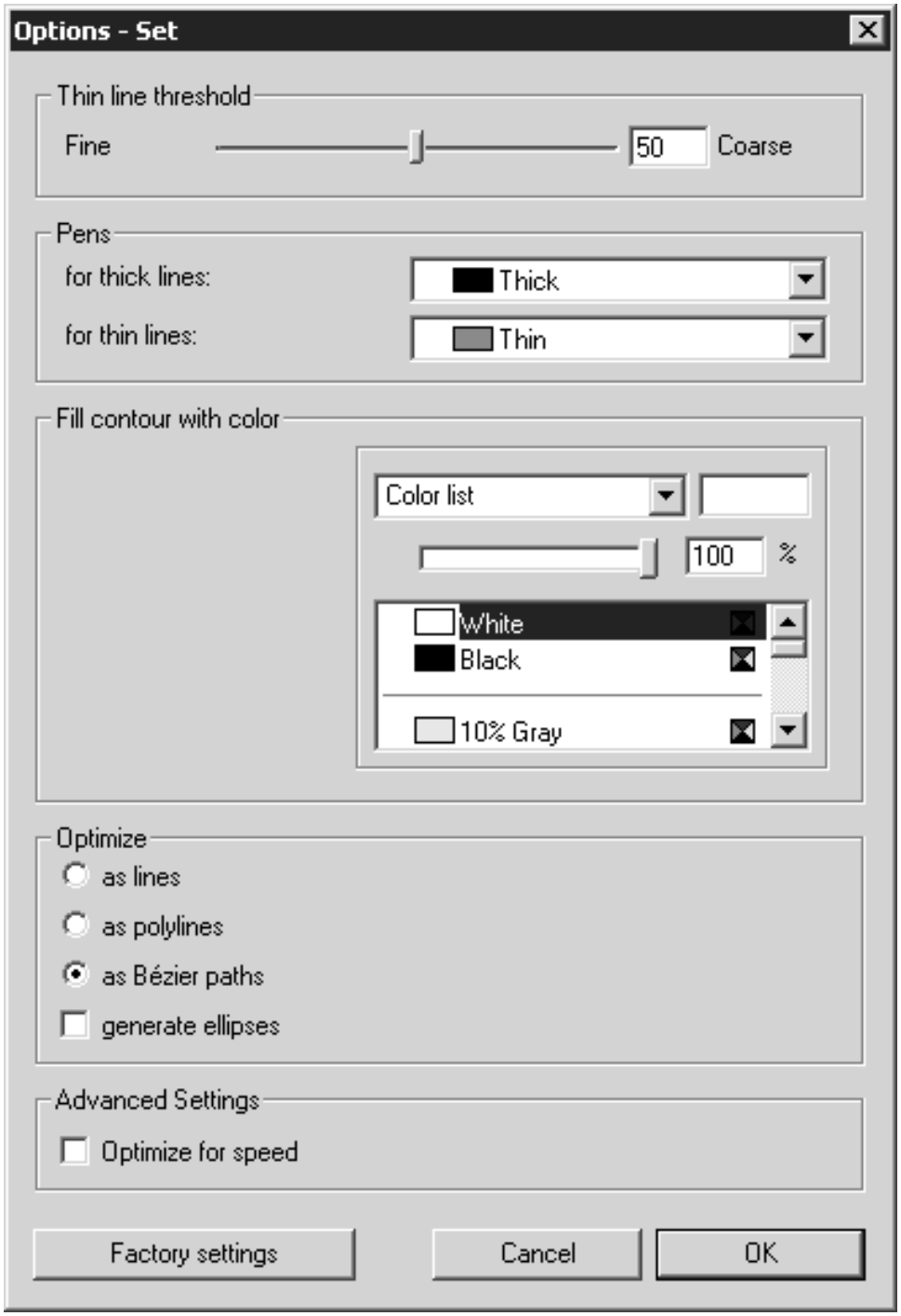

Thin Line Threshold

This is where you can specify at which transitions between the triangular surfaces Arbortext IsoDraw CADprocess is to set thin lines, or inner edges.

Note

If you are importing IGES files, the number of possible inner edges is also determined by tessellation accuracy settings. (See *3D Options on page 126* *for more on tessellation accuracy.)*

Inner edges can always be inserted where two adjacent triangles share an edge. The orientation angle (w) between both triangular surfaces (D1, D2) is used as the basis for calculating whether or not an inner edge is to be inserted.

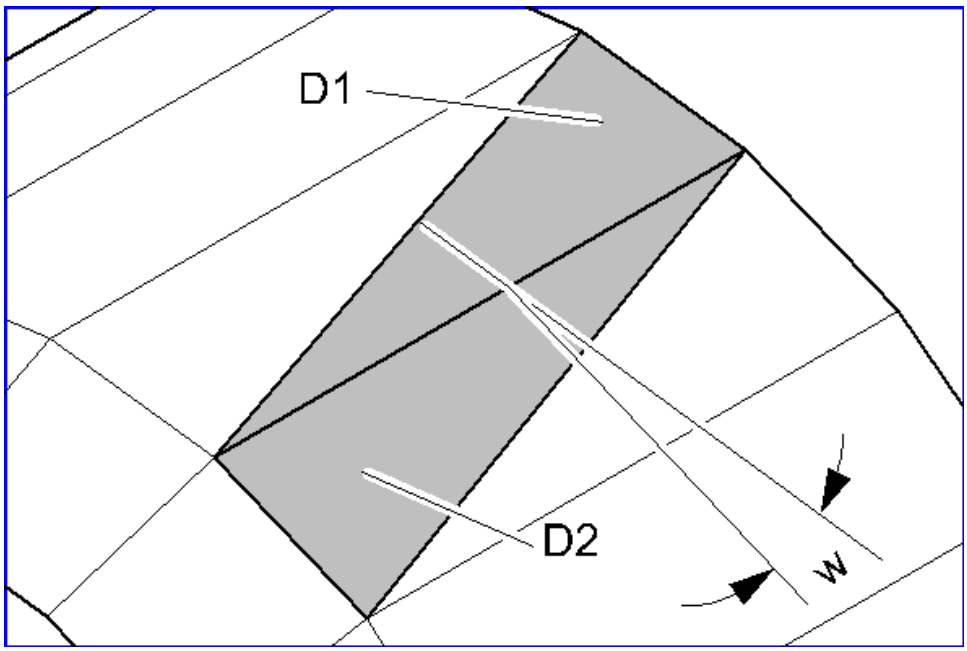

This means that the larger the angle at which the triangles contact, the smaller the orientation angle between the triangular surfaces. By setting the threshold for this angle, you are deciding whether an inner edge appears. The finer your setting, the smaller the angles between triangular surfaces that will be used for calculating inner edges.

The following three examples will illustrate the effect of various threshold settings.

The example on the left shows the result at the finest setting possible. Inner edges have been inserted at all possible triangular edges. A good result has been achieved in the center example, where the threshold has been set at `20`. Unwanted inner

edges are not shown. Only the inner edge at the chamfer has been inserted. The example on the right depicts a very coarse setting. Too few or no inner edges have been inserted.

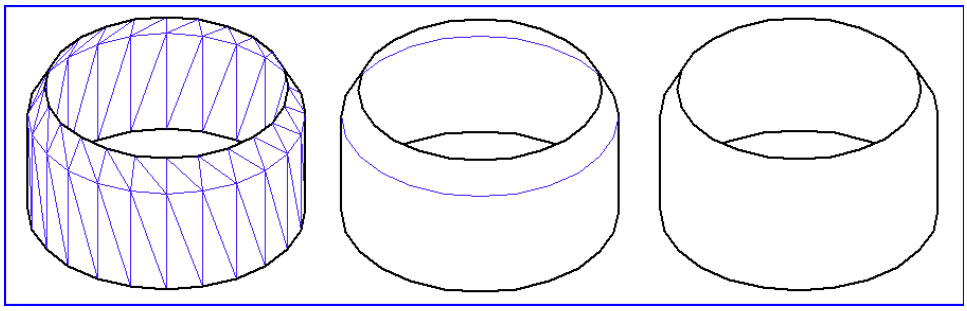

The value in the input field has no unit and is used as a preference for internal matching with the angle (w). You can enter values between 1 and 100. You can enter the value directly or use the slider.

Note

When working with IGES files in particular, the triangles are created by Arbortext IsoDraw CADprocess. Specifying tessellation settings also determines the number of triangles that are created (see dialog page ***Projection options*** *in* *Preferences on page 108**). This in turn affects the result of the inner edges that are applied. If you want to convert a 3D drawing containing a complex surface, use the default setting (50) for both the* ***Tessellation Accuracy*** *and* ***Thin line threshold*** *functions. Look at the result of the projection. If the result is not accurate enough or if there are excessive numbers of inner edges on the surfaces, modify the thin line settings. If you also want to change tessellation accuracy you must re-import the 3D data after adjusting the settings. If you have only changed thin line threshold settings, create a new version of the 2D projection. To accelerate this procedure, select* ***as lines*** *under* ***Optimize****. To ensure a compact file, select* ***as Bézier paths*** *for the elements in the final version.*

Particularly when working with large amounts of data, you can see the results of your thin line threshold settings in the current drawing in 3D mode before initiating the conversion process. This allows you to see a preview of the converted drawing without needing to delay the conversion process. The drawing must be depicted in **HLR** display mode to do this. To view the preview, select the **Preferences** menu command, then the **3D Options** dialog page. Change the **Thin line threshold** on this dialog page. To make the new setting visible on the drawing, close the **3D Options** dialog page by clicking **OK**.

Pens

This allows you to select the **pens** to be used for outer and inner edges. Select the pen for the outer edges in the **for thick lines** pop-up menu. Select the pen for the inner edges in the **for thin lines** pop-up menu. All pens for the current file are

displayed. Before the conversion, you can also create additional pens. These pens will also be displayed in the pop-up menus. The process for creating a new pen and the points you need to remember when doing so are described in Show Attribute Window on page 352.

Fill Contour with Color

If you selected the **fill contour** check box, you can change the color used to fill the 3D set contour under **Fill contour with color**. (The fill color is white by default.)

To change the contour fill color, click a different color in the lower **Color list**. The lower **Color list** shows all available colors in the current file. The color box next to the upper **Color list** shows the currently selected color.

To change the tone of (or, the amount of white in) the currently selected color, drag the **Tone** slider.

To change the contour fill color to a CYMK or RGB color you define:

1. Click **Free CYMK color** or **Free RGB color** in the upper **Color list**.
2. Adjust the CYMK or RGB color sliders until the color box shows the color you want. You can also enter percentage values for CYMK or RGB colors directly.

When you click **OK** to close the **Options - Set** dialog box, the color in the color box is the applied 3D contour fill color.

(For more information on creating and editing colors in Arbortext IsoDraw, see Fill Type — Color on page 409.)

Optimize

There are three ways for selecting how elements from the 3D data are to be defined as elements in the 2D illustration.

If you select **as lines**, the 2D illustration will only contain lines in the form of unconnected elements. If you select **as polylines**, several lines which follow on from each other are grouped together into polylines. Selecting **as Bézier paths** converts those elements of the 3D data, which follow on from each other into a Bézier path. Conversion to Bézier paths gives you the best results in terms of contour accuracy for the illustration. What is more, the number of elements is far lower than for line elements, what facilitates subsequent operation and also reduces storage requirements.

If you click the Generate ellipses box, the elements that together make up an ellipse form are converted into an ellipse or an ellipse segment. The ellipses generated in this way optimize the 2D illustration and are easier to use subsequently. For example, you can use the center point of an ellipse to easily change the orientation of a centerline.

You should only use the **as lines** setting if you want to try out different settings for surface smoothness and accuracy. You should then return to the **as polylines** or **as Bézier paths** setting. You should only select the **Generate ellipses** option if the drawing contains numerous convertible elements.

Advanced Settings

If you click the **Optimize for speed** button, simplified calculations are carried out in some cases during conversion. This accelerates the conversion process. There is no generally valid rule for calculating the time this saves. This depends on the imported data format and the file content. Experience shows that the time saved increases in line with number of elements that change to inner edges in the 2D illustration.

Optimize for speed generally involves no loss of quality in the 2D illustration. If errors occur during the conversion process, you will be able to see this in the illustration. If this happens, switch off the function and repeat the conversion.

If you want to process a large number of files in the same format, select **Optimize for speed** for the first set of files. Examine the 2D illustrations. If the conversion is successful, leave the function switched on.

Factory Settings

If you click the **Factory settings** button in the **Options** dialog box, the settings in this window will be set to the selections recommended by the manufacturer. Experience has shown that these factory settings will deliver excellent Technical Illustrations for most 3D data.

Clicking **Cancel** exits the **Options** dialog box. All changes are rejected. Clicking **OK** applies the current setting status to the projection. The settings are applied until the next change is made.

23 Further Processing in Arbortext IsoDraw CADprocess

Applies to Arbortext IsoDraw CADprocess only.

You have performed a transformation for the imported or placed drawing in **3D mode**. The resulting projection has been saved as an Arbortext IsoDraw file.

You can now process the illustration in a number of ways using the tools in Arbortext IsoDraw CADprocess. You can draw new elements, enter text, create callouts, and change the elements of imported data.

You can naturally also export the finished Arbortext IsoDraw file. You can find further information on this in Export on page 38 and Preferences on page 108 as well as in the *Arbortext IsoDraw Data Exchange Reference*.

Index

A

B

C

D

E

F

G

H

I

K

L

M

N

O

P

R

S

T

U

V

W

X

Y

Z